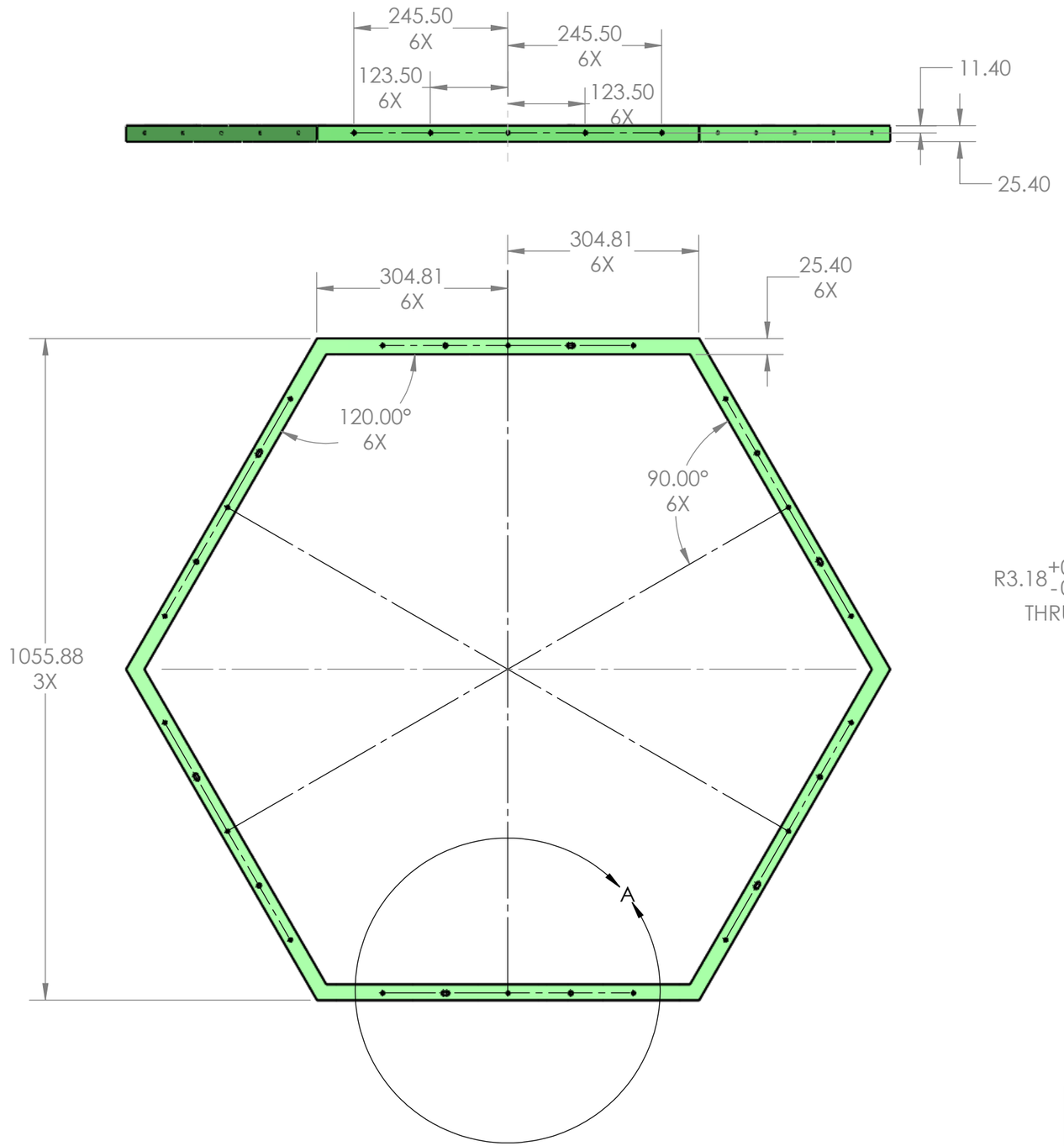

SCALE 1: 8

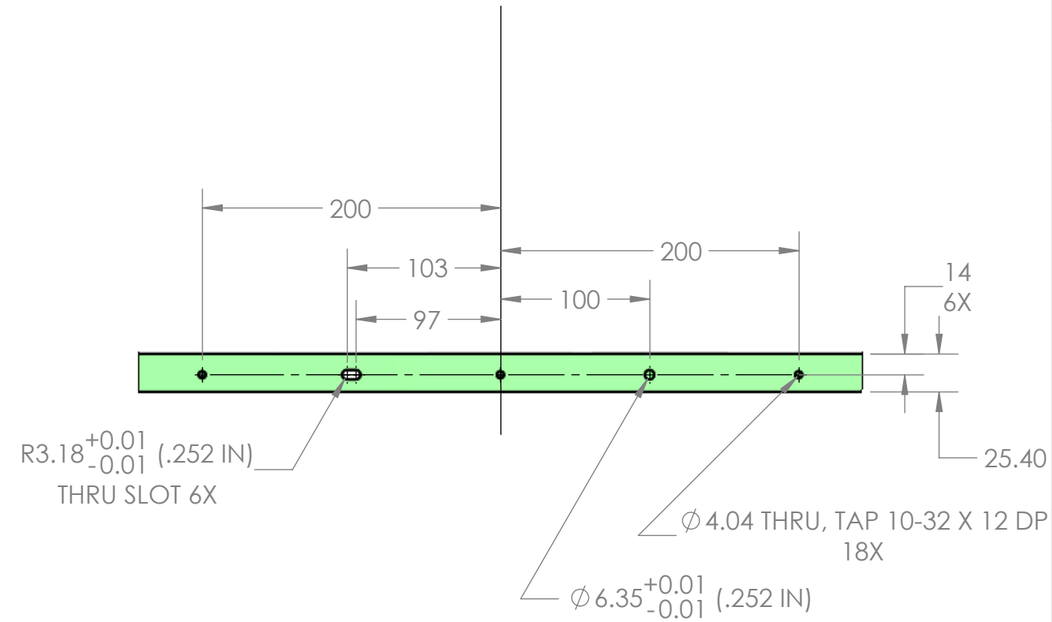

DETAIL A
SCALE 1 : 4

ALL DIMENSIONS IN MILLIMETERS

P-25 SUBATOMIC PHYSICS	DIMENSIONS ARE IN INCHES TOLERANCES UNLESS SPECIFIED: FRACTIONAL ± ANGULAR: MACH ± BEND ± TWO PLACE DECIMAL ± 0.01 THREE PLACE DECIMAL ± 0.003		NAME	DATE	
		DRAWN	WALT	12/21/12	
		CHECKED			2m-hexagonal-support-frame-mini
		ENG APPR.			
		MFG APPR.			
Los Alamos NATIONAL LABORATORY EST. 1943	MATERIAL FR-4	Q.A.			
	FINISH	COMMENTS:			SIZE B · DWG. NO. 126Y-766708 · REV.
LOS ALAMOS NATIONAL LABORATORY LOS ALAMOS, NM, 87545	QUANTITY REQUIRED 1				SCALE: 1: 8 · WEIGHT: · SHEET 13 OF 22