REVISIONS			
REV.	DESCRIPTION	DATE	APPROVED
A			

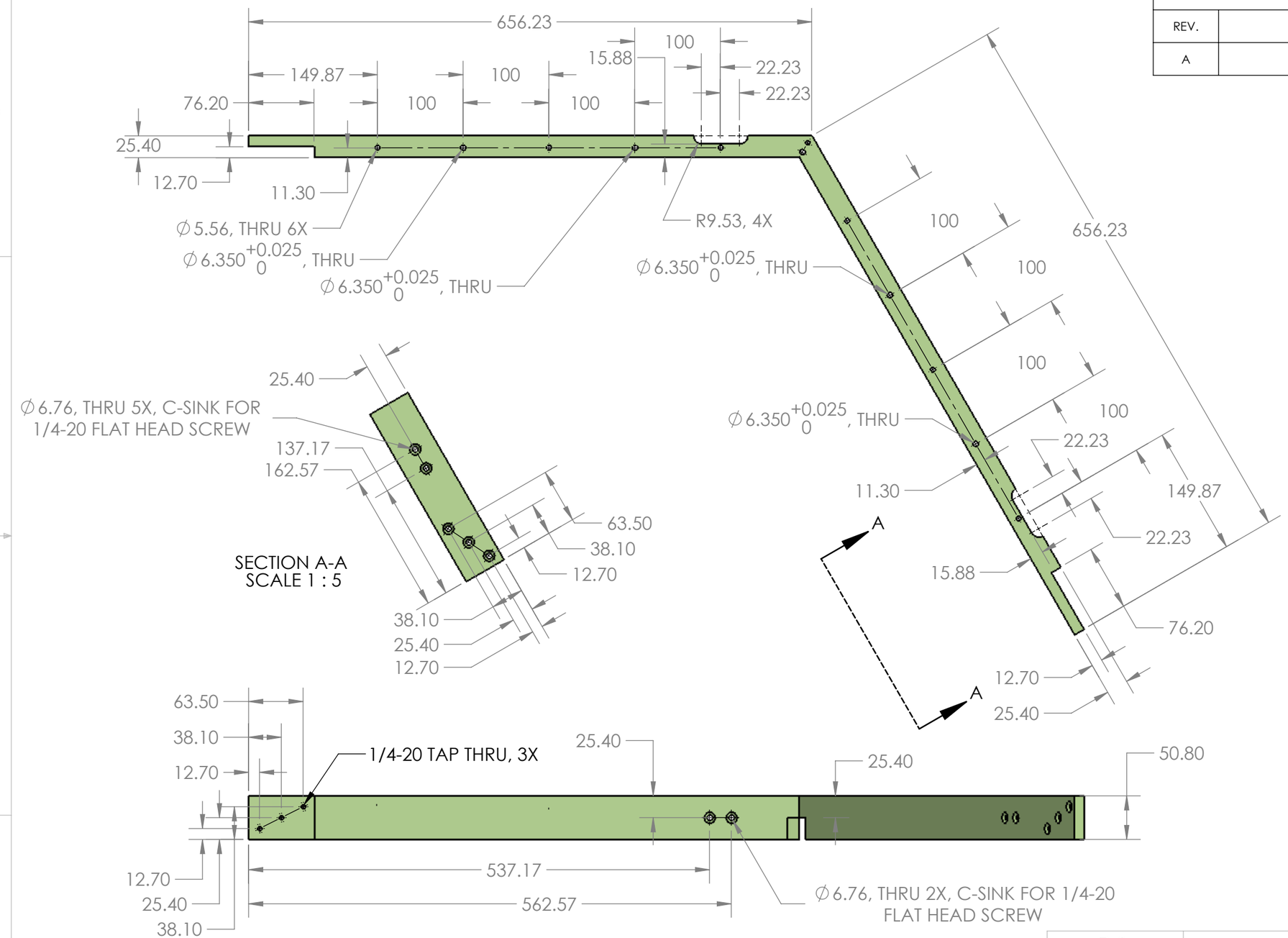

ALL DIMENSIONS IN MILLIMETERS

P-25
SUBATOMIC PHYSICS

Los Alamos NATIONAL LABORATORY EST. 1943

LOS ALAMOS NATIONAL LABORATORY
LOS ALAMOS, NM, 87545

DIMENSIONS ARE IN INCHES
TOLERANCES UNLESS SPECIFIED:
FRACTIONAL ±
ANGULAR: MACH ± BEND ±
TWO PLACE DECIMAL ± 0.01
THREE PLACE DECIMAL ± 0.003

MATERIAL: FR-4

FINISH

QUANTITY REQUIRED: 1

	NAME	DATE
DRAWN	WALT	2/28/2014
CHECKED		
ENG APPR.		
MFG APPR.		
Q.A.		

COMMENTS:

2m-hexagonal-structural-frame-corner-no-support-tabs-negative

SIZE B | DWG. NO. 126Y-1766755-44 | REV. A

SCALE:1:5 | WEIGHT: | SHEET 1 OF 2

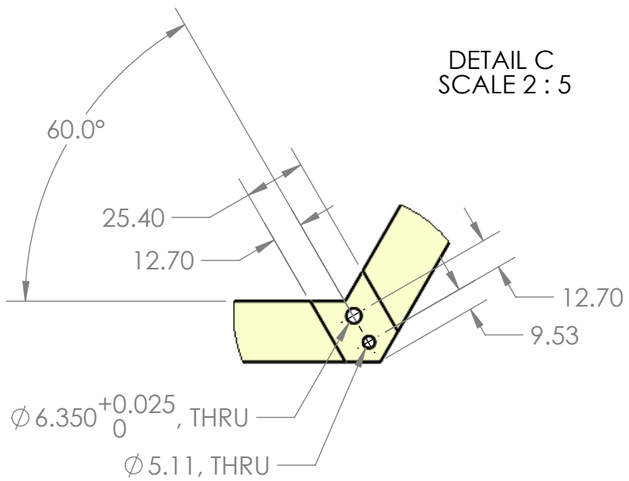

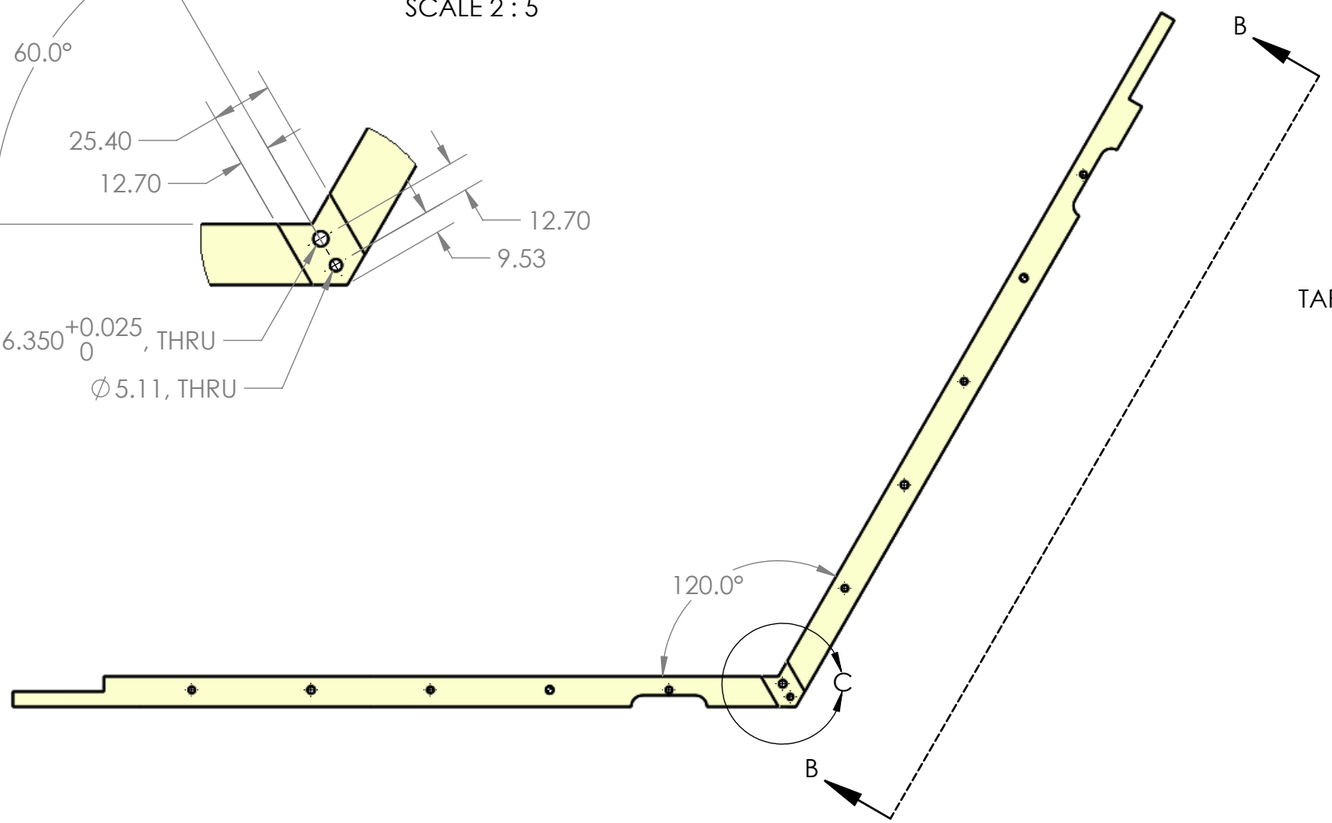

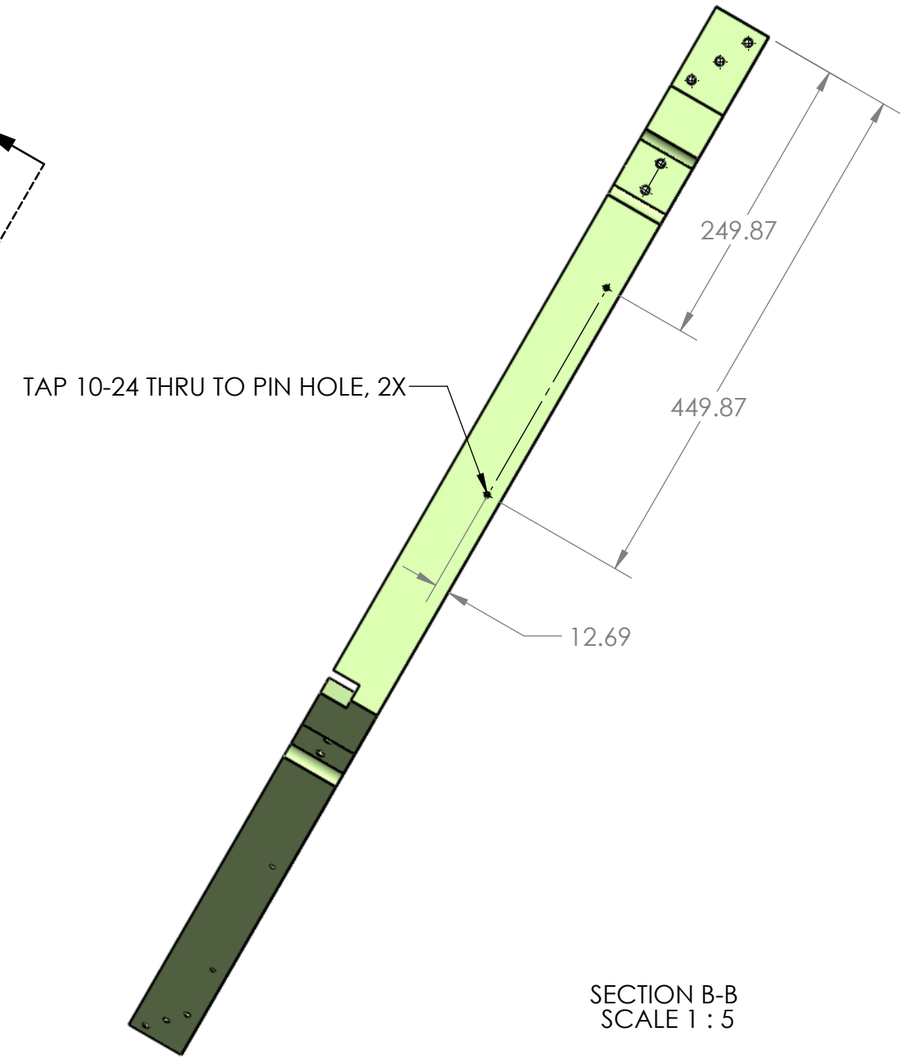

SECTION B-B
SCALE 1 : 5

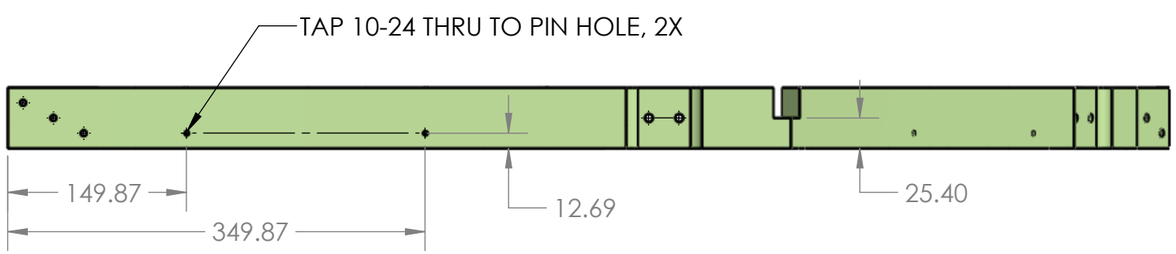

ALL DIMENSION IN MILLIMETER

P-25 SUBATOMIC PHYSICS Los Alamos NATIONAL LABORATORY EST. 1943 LOS ALAMOS NATIONAL LABORATORY LOS ALAMOS, NM, 87545	DIMENSIONS ARE IN INCHES TOLERANCES UNLESS SPECIFIED: FRACTIONAL ± ANGULAR: MACH ± BEND ± TWO PLACE DECIMAL ± 0.01 THREE PLACE DECIMAL ± 0.003		NAME	DATE	
		DRAWN	WALT	2/28/2014	
		CHECKED			2m-hexagonal-structural-frame-corner-no-support-tabs-negative
		ENG APPR.			
	MATERIAL FR-4	MFG APPR.			
		Q.A.			
	FINISH	COMMENTS:			
	QUANTITY REQUIRED 1				SIZE B · DWG. NO. 126Y-1766755-44 · REV. A
					SCALE:1:5 · WEIGHT: · SHEET 2 OF 2