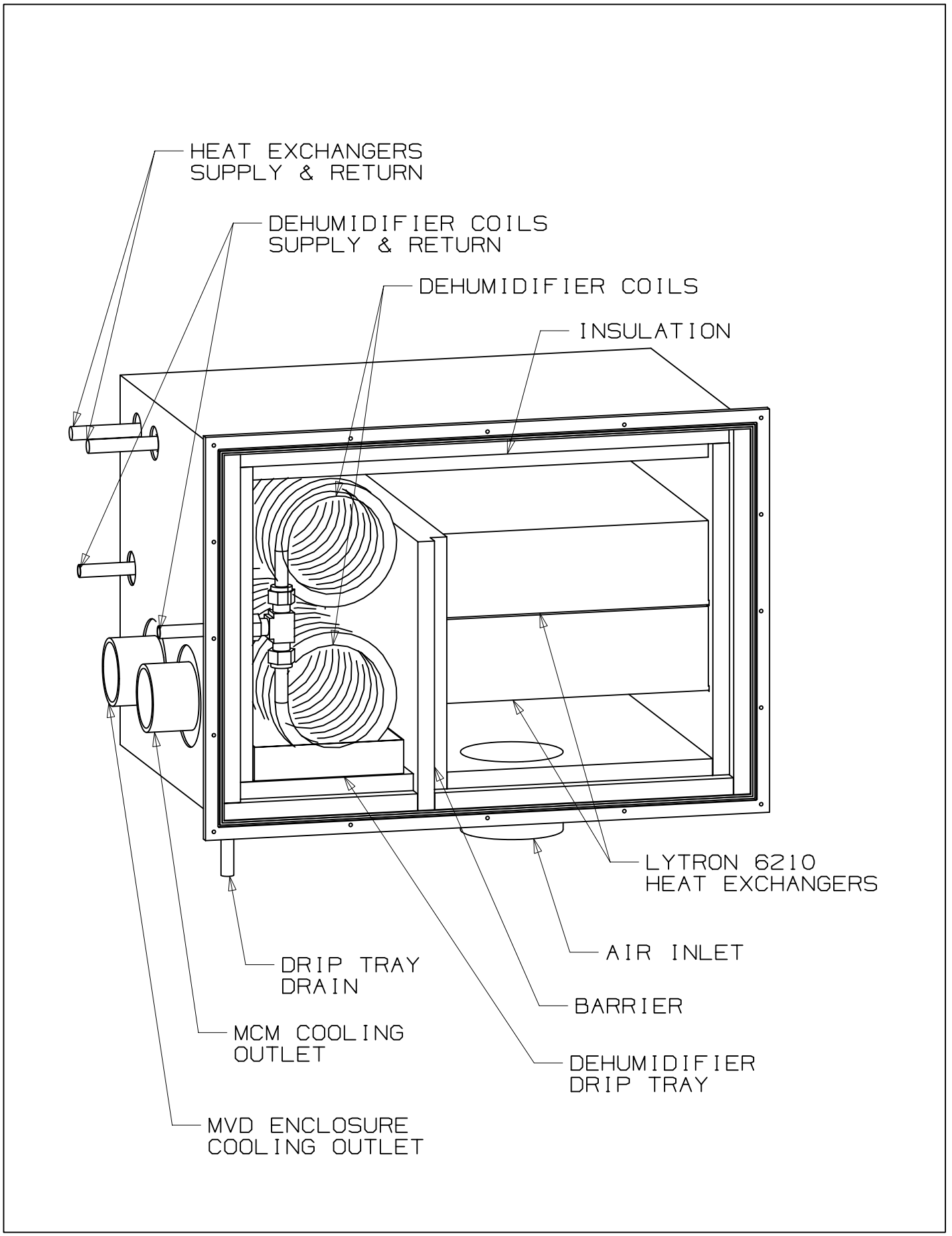
HEAT EXCHANGERS
SUPPLY & RETURN
DEHUMIDIFIER COILS
SUPPLY & RETURN
DEHUMIDIFIER COILS
INSULATION
LYTRON 6210
HEAT EXCHANGERS
AIR INLET
DRIP TRAY
DRAIN
BARRIER
MCM COOLING
OUTLET
DEHUMIDIFIER
DRIP TRAY
MVD ENCLOSURE
COOLING OUTLET