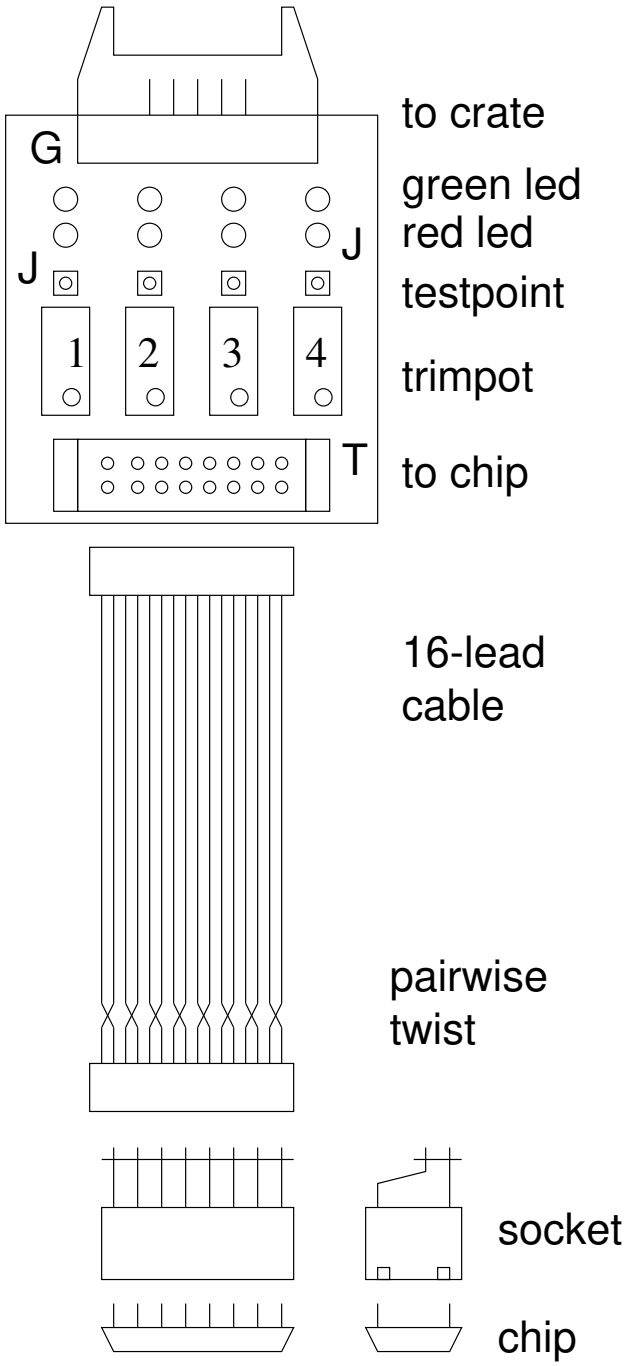
to crate
G
green led
red led
J
J
testpoint
1
2
3
4
trimpot
T
to chip
16-lead
cable
pairwise
twist
socket
chip