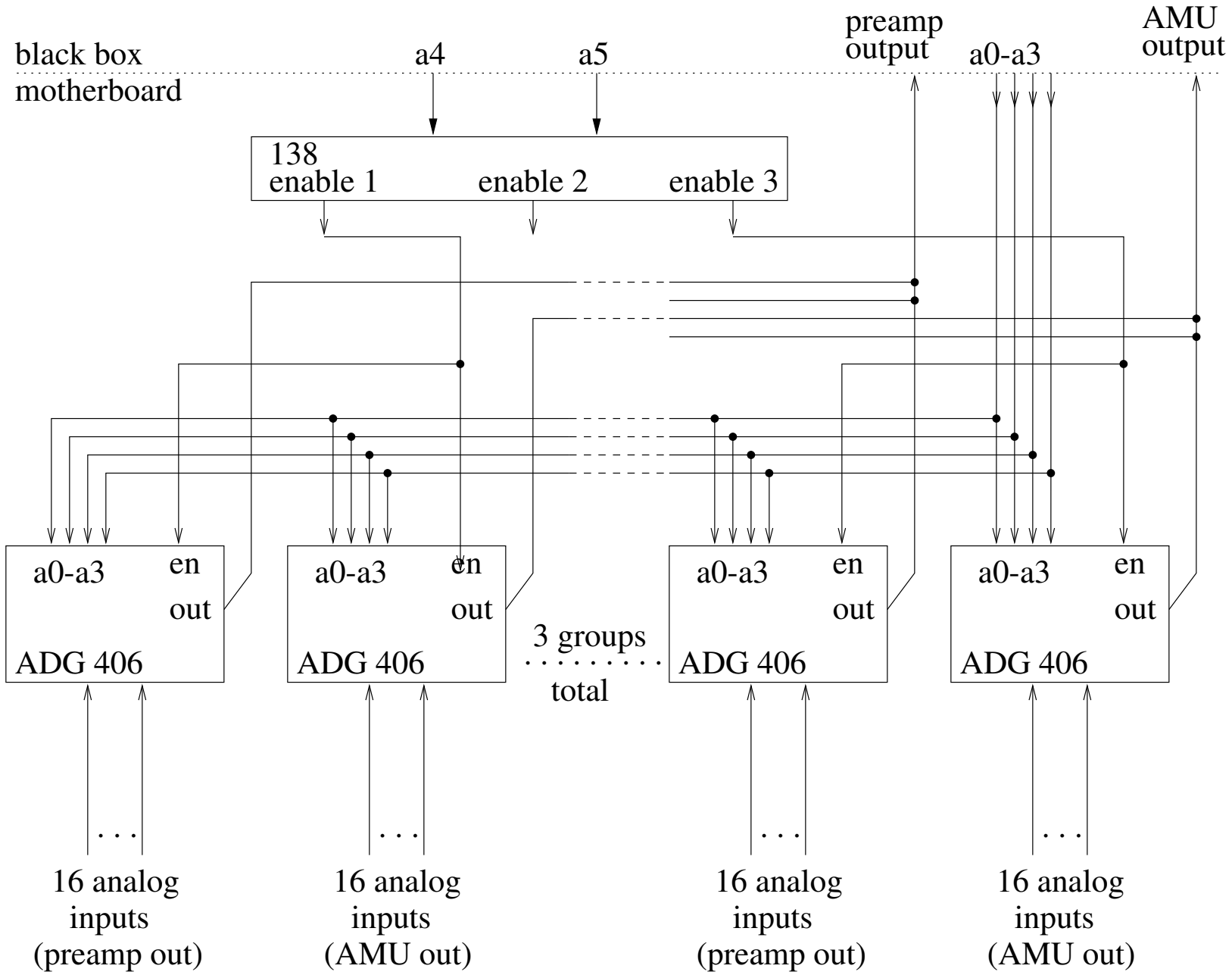
black box
motherboard
a4
a5
preamp
output
a0-a3
AMU
output
138
enable 1
enable 2
enable 3
a0-a3
en
out
ADG 406
3 groups
total
16 analog
inputs
(preamp out)
16 analog
inputs
(AMU out)