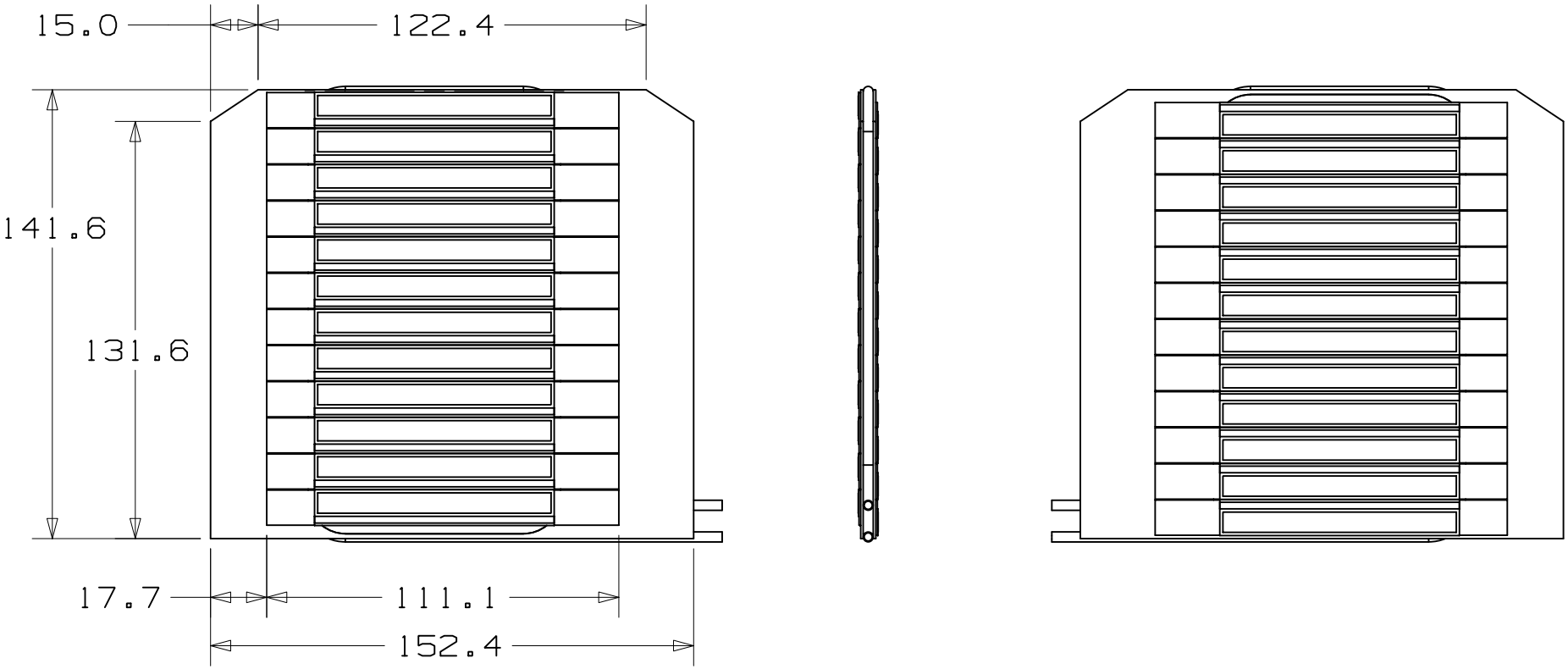
15.0
122.4
141.6
131.6
17.7
111.1
152.4