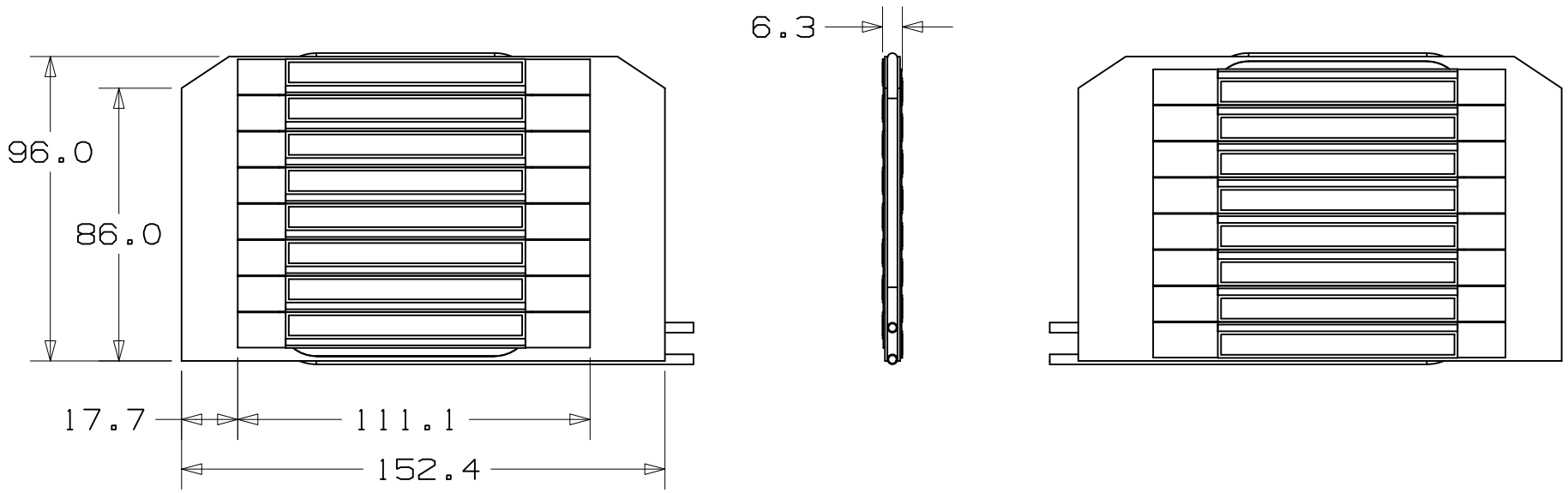
6.3
96.0
86.0
17.7
111.1
152.4