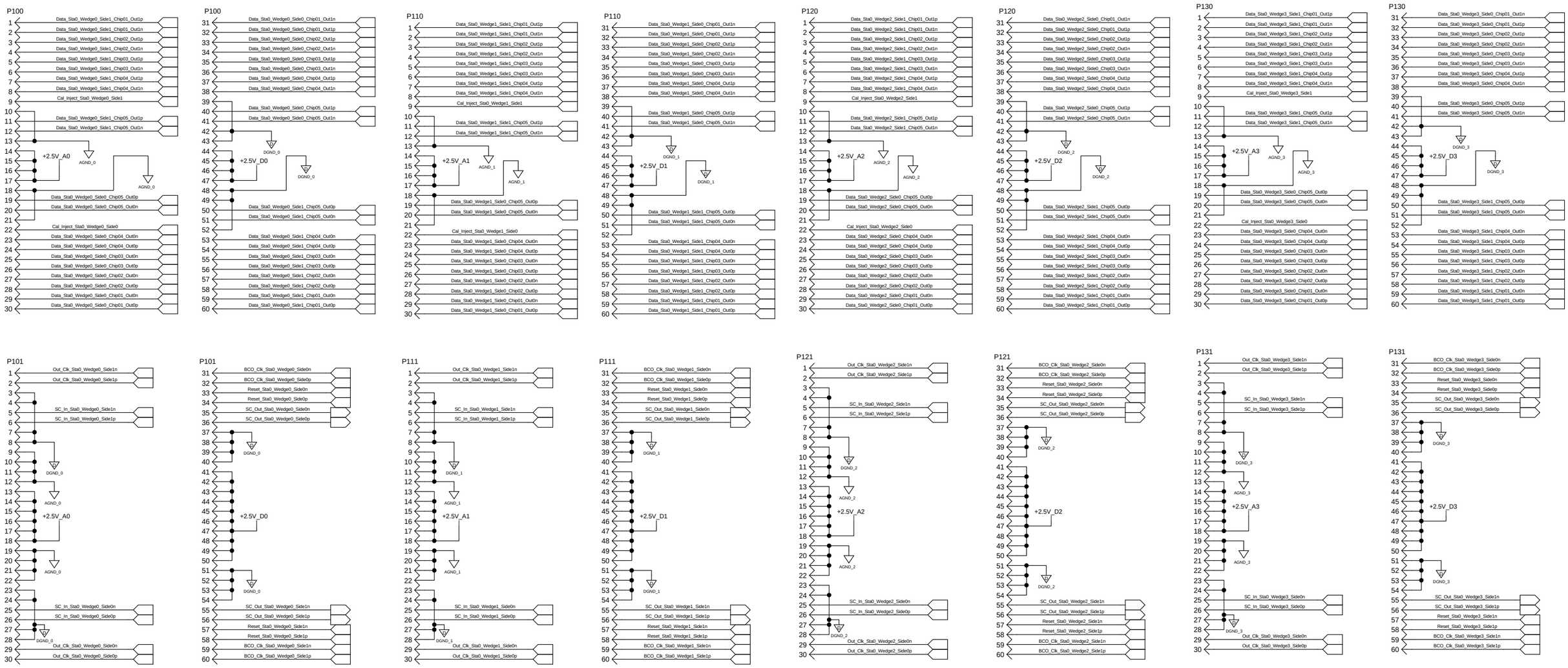

Station 0

AS OF 10/05/2010 @ 12:50PM

REVISION LETTER	CLASS REVIEW	REVISIONS	DATE	CHANGE BY	CHECK BY	APPROVED BY
—		ORIGINAL ISSUE	—	—	—	—

LOS ALAMOS

LOS ALAMOS NATIONAL LABORATORY
LOS ALAMOS, NEW MEXICO 87545

MENTOR 2005

	NAME	SIGNATURE	DATE	GROUP
ORIGINATED				
DESIGNED				
DRAWN	S. CHACON	S. CHACON	APR 2009	AOT-IC
CHECKED	M. PROKOP	M. PROKOP	APR 2009	AOT-RFE
PROJ. ENGR.	M. PROKOP	M. PROKOP	APR 2009	AOT-RFE
APPROVED				
RELEASED				

CLASSIFICATION OF: DRAWING: U
PART: U DRAWING: U

TITLE

(P-25)

FVTX
ROC PROTOTYPE
SIGNAL CONNECTORS-STATION 0

TOLERANCE (UNLESS OTHERWISE NOTED)
X= ± — 0.XX= ± — ANGULAR ± —
0.X= ± — 0.XXX= ± — FINISH ± —

SCALE	NO. SHEETS	DRAWING NO.	SIZE	SHEET NO.
N/A	1	126Y-267898	D	1

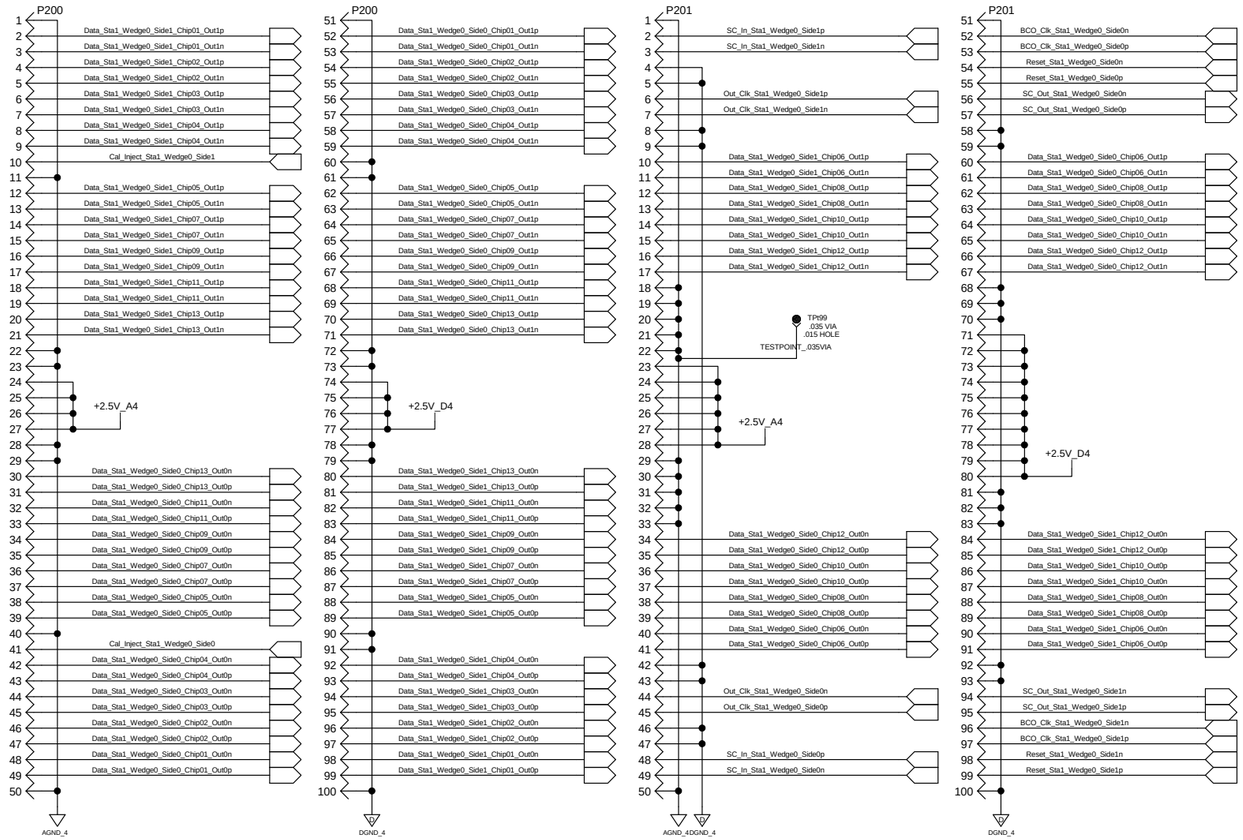

Station 1 Wedge 0

AS OF 10/05/2010 @ 12:50PM

REVISION LETTER	CLASS REVIEW	REVISIONS	DATE	CHANGE BY	CHECK BY	APPROVED BY
—		ORIGINAL ISSUE	—	—	—	—

LOS ALAMOS

LOS ALAMOS NATIONAL LABORATORY
LOS ALAMOS, NEW MEXICO 87545

MENTOR 2005

	NAME	SIGNATURE	DATE	GROUP
ORIGINATED				
DESIGNED				
DRAWN	S. CHACON	S. CHACON	APR 2009	AOT-IC
CHECKED	M. PROKOP	M. PROKOP	APR 2009	AOT-RFE
PROJ. ENGR.	M. PROKOP	M. PROKOP	APR 2009	AOT-RFE
APPROVED				
RELEASED				

CLASSIFICATION OF: DRAWING: U
PART: U DRAWING: U

TITLE

(P-25)

FVTX
ROC PROTOTYPE
SIGNAL CONNECTORS-STATION 1

TOLERANCE (UNLESS OTHERWISE NOTED)
X= ± — 0.XX= ± — ANGULAR ± —
0.X= ± — 0.XXX= ± — FINISH ± —

SCALE	NO. SHEETS	DRAWING NO.	SIZE	SHEET NO.
N/A	1	126Y-267898	D	2

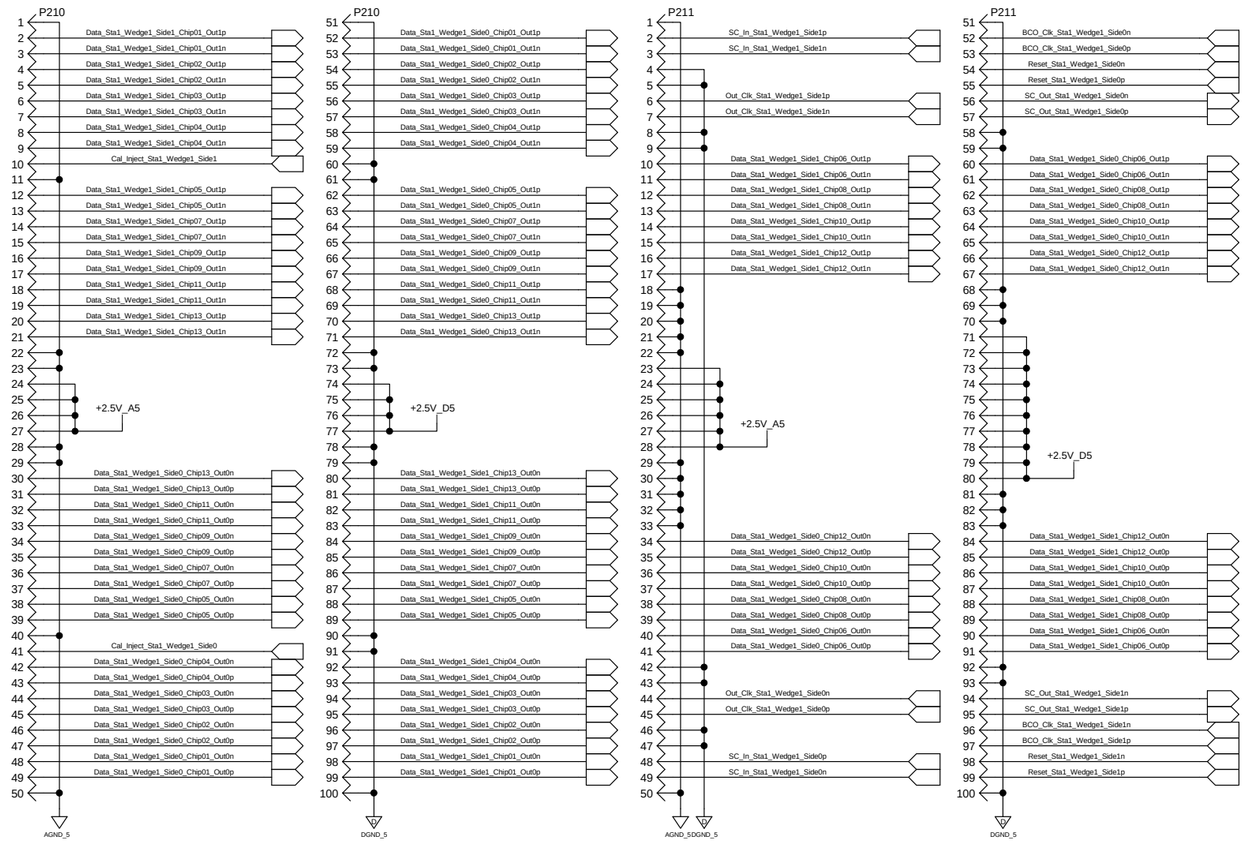

Station 1 Wedge 1

AS OF 10/05/2010 @ 12:50PM

REVISION LETTER	CLASS REVIEW	REVISIONS	DATE	CHANGE BY	CHECK BY	APPROVED BY
—		ORIGINAL ISSUE	—	—	—	—

LOS ALAMOS

LOS ALAMOS NATIONAL LABORATORY
LOS ALAMOS, NEW MEXICO 87545

MENTOR 2005

	NAME	SIGNATURE	DATE	GROUP
ORIGINATED				
DESIGNED				
DRAWN	S. CHACON	S. CHACON	APR 2009	AOT-IC
CHECKED	M. PROKOP	M. PROKOP	APR 2009	AOT-RFE
PROJ. ENGR.	M. PROKOP	M. PROKOP	APR 2009	AOT-RFE
APPROVED				
RELEASED				

CLASSIFICATION OF DRAWING: U

PART: U DRAWING: U

TITLE

(P-25)

FVTX
ROC PROTOTYPE
SIGNAL CONNECTORS-STATION 1

TOLERANCE (UNLESS OTHERWISE NOTED)

X= ± — 0.XX= ± — ANGULAR ± —
0.X= ± — 0.XXX= ± — FINISH ± —

SCALE	NO. SHEETS	DRAWING NO.	SIZE	SHEET NO.
N/A	1	126Y-267898	D	3

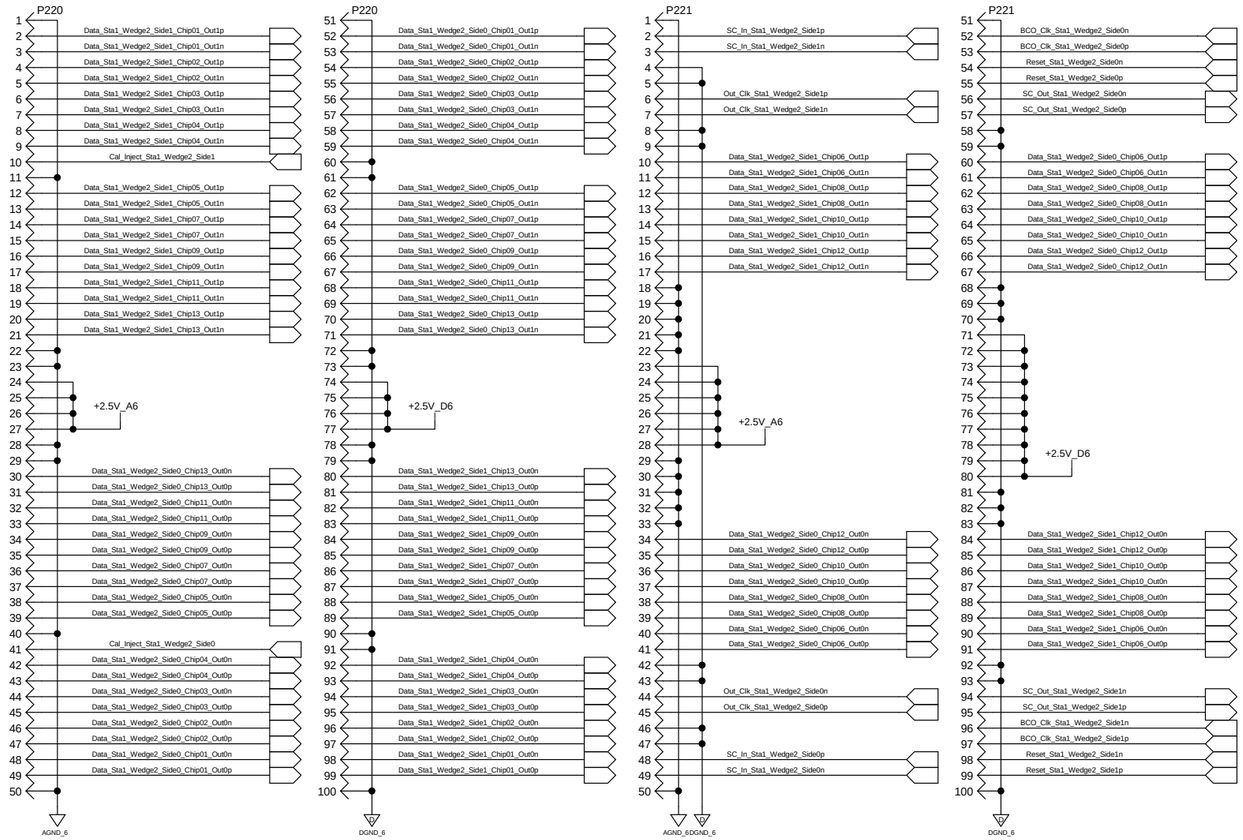

Station 1 Wedge 2

AS OF 10/05/2010 @ 12:50PM

REVISION LETTER	CLASS REVIEW	REVISIONS	DATE	CHANGE BY	CHECK BY	APPROVED BY
—		ORIGINAL ISSUE	—	—	—	—

LOS ALAMOS

LOS ALAMOS NATIONAL LABORATORY
LOS ALAMOS, NEW MEXICO 87545

MENTOR 2005

	NAME	SIGNATURE	DATE	GROUP
ORIGINATED				
DESIGNED				
DRAWN	S. CHACON	S. CHACON	APR 2009	AOT-IC
CHECKED	M. PROKOP	M. PROKOP	APR 2009	AOT-RFE
PROJ. ENGR.	M. PROKOP	M. PROKOP	APR 2009	AOT-RFE
APPROVED				
RELEASED				

CLASSIFICATION OF DRAWING: U
PART: U DRAWING: U

TITLE

(P-25)

FVTX
ROC PROTOTYPE
SIGNAL CONNECTORS-STATION 1

TOLERANCE (UNLESS OTHERWISE NOTED)
X= ± — 0.XX= ± — ANGULAR ± —
0.X= ± — 0.XXX= ± — FINISH ± —

SCALE	NO. SHEETS	DRAWING NO.	SIZE	SHEET NO.
N/A	1	126Y-267898	D	4

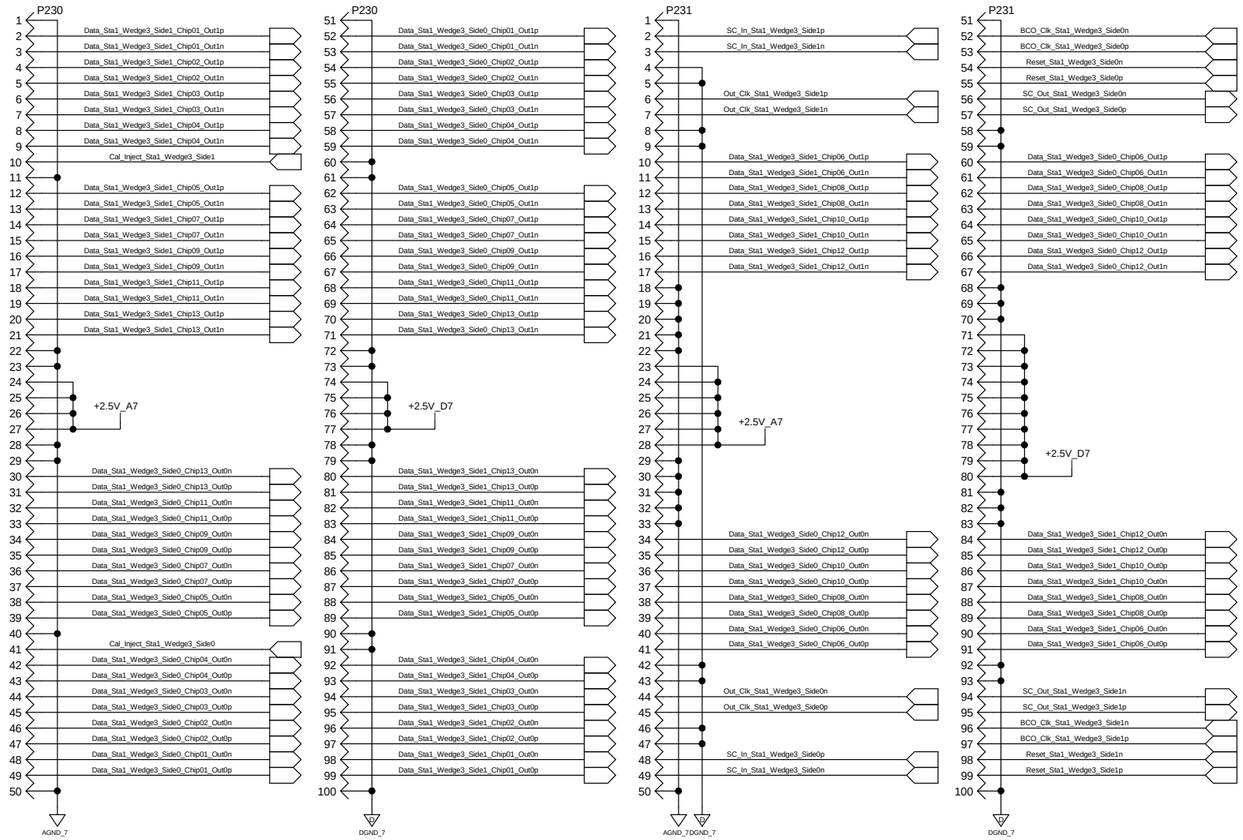

Station 1 Wedge 3

AS OF 10/05/2010 @ 12:50PM

REVISION LETTER	CLASS REVIEW	REVISIONS	DATE	CHANGE BY	CHECK BY	APPROVED BY
—		ORIGINAL ISSUE	—	—	—	—

LOS ALAMOS

LOS ALAMOS NATIONAL LABORATORY
LOS ALAMOS, NEW MEXICO 87545

MENTOR 2005

	NAME	SIGNATURE	DATE	GROUP
ORIGINATED				
DESIGNED				
DRAWN	S. CHACON	S. CHACON	APR 2009	AOT-IC
CHECKED	M. PROKOP	M. PROKOP	APR 2009	AOT-RFE
PROJ. ENGR.	M. PROKOP	M. PROKOP	APR 2009	AOT-RFE
APPROVED				
RELEASED				

CLASSIFICATION OF DRAWING: U
PART: U DRAWING: U

TITLE

(P-25)

FVTX
ROC PROTOTYPE
SIGNAL CONNECTORS-STATION 1

TOLERANCE (UNLESS OTHERWISE NOTED)
X= ± — 0.XX= ± — ANGULAR ± —
0.X= ± — 0.XXX= ± — FINISH ± —

SCALE	NO. SHEETS	DRAWING NO.	SIZE	SHEET NO.
N/A	1	126Y-267898	D	5

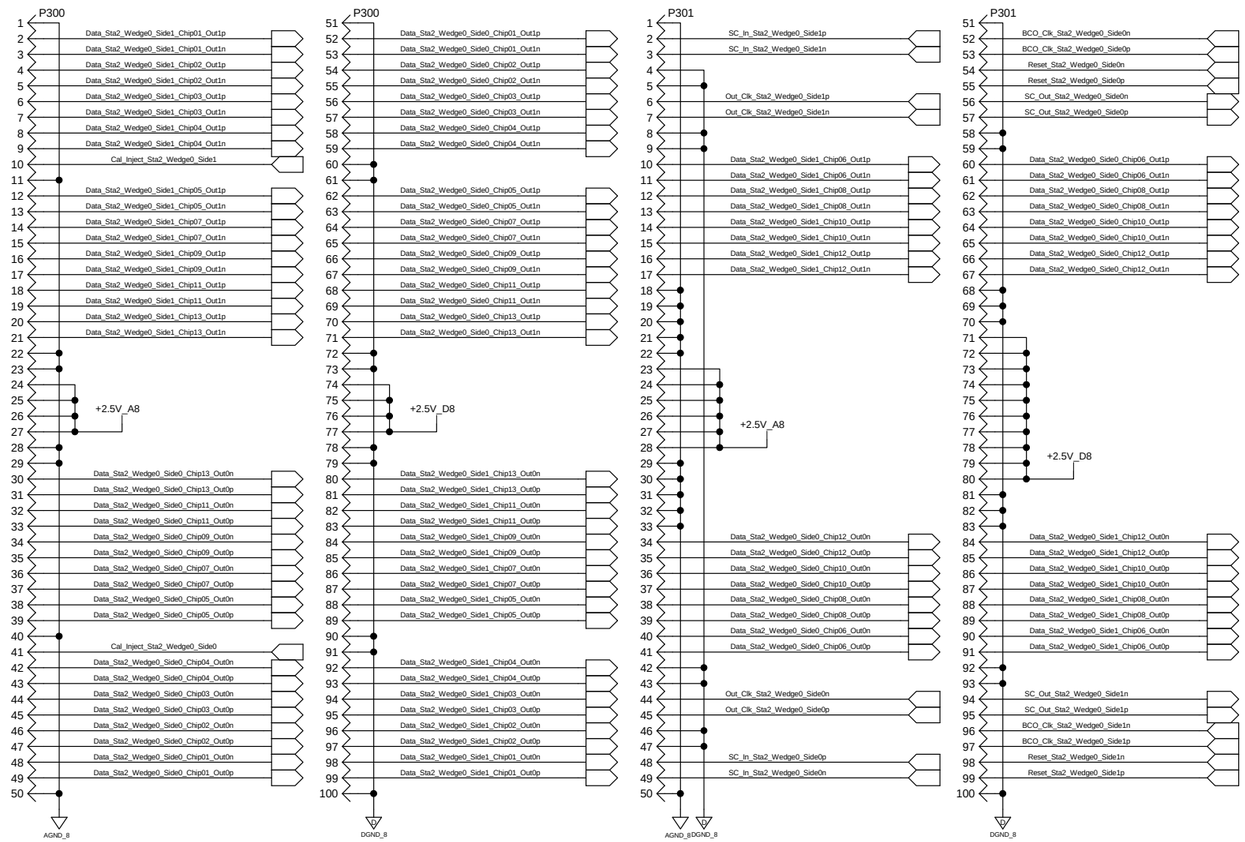

Station 2 Wedge 0

AS OF 10/05/2010 @ 12:50PM

REVISION LETTER	CLASS REVIEW	REVISIONS	DATE	CHANGE BY	CHECK BY	APPROVED BY
—		ORIGINAL ISSUE	—	—	—	—

LOS ALAMOS

LOS ALAMOS NATIONAL LABORATORY
LOS ALAMOS, NEW MEXICO 87545

MENTOR 2005

	NAME	SIGNATURE	DATE	GROUP
ORIGINATED				
DESIGNED				
DRAWN	S. CHACON	S. CHACON	APR 2009	AOT-IC
CHECKED	M. PROKOP	M. PROKOP	APR 2009	AOT-RFE
PROJ. ENGR.	M. PROKOP	M. PROKOP	APR 2009	AOT-RFE
APPROVED				
RELEASED				

CLASSIFICATION OF: DRAWING: U
PART: U DRAWING: U

TITLE

(P-25)

FVTX
ROC PROTOTYPE
SIGNAL CONNECTORS-STATION 2

TOLERANCE (UNLESS OTHERWISE NOTED)
X= ± — 0.XX= ± — ANGULAR ± —
0.X= ± — 0.XXX= ± — FINISH ± —

SCALE	NO. SHEETS	DRAWING NO.	SIZE	SHEET NO.
N/A	1	126Y-267898	D	6

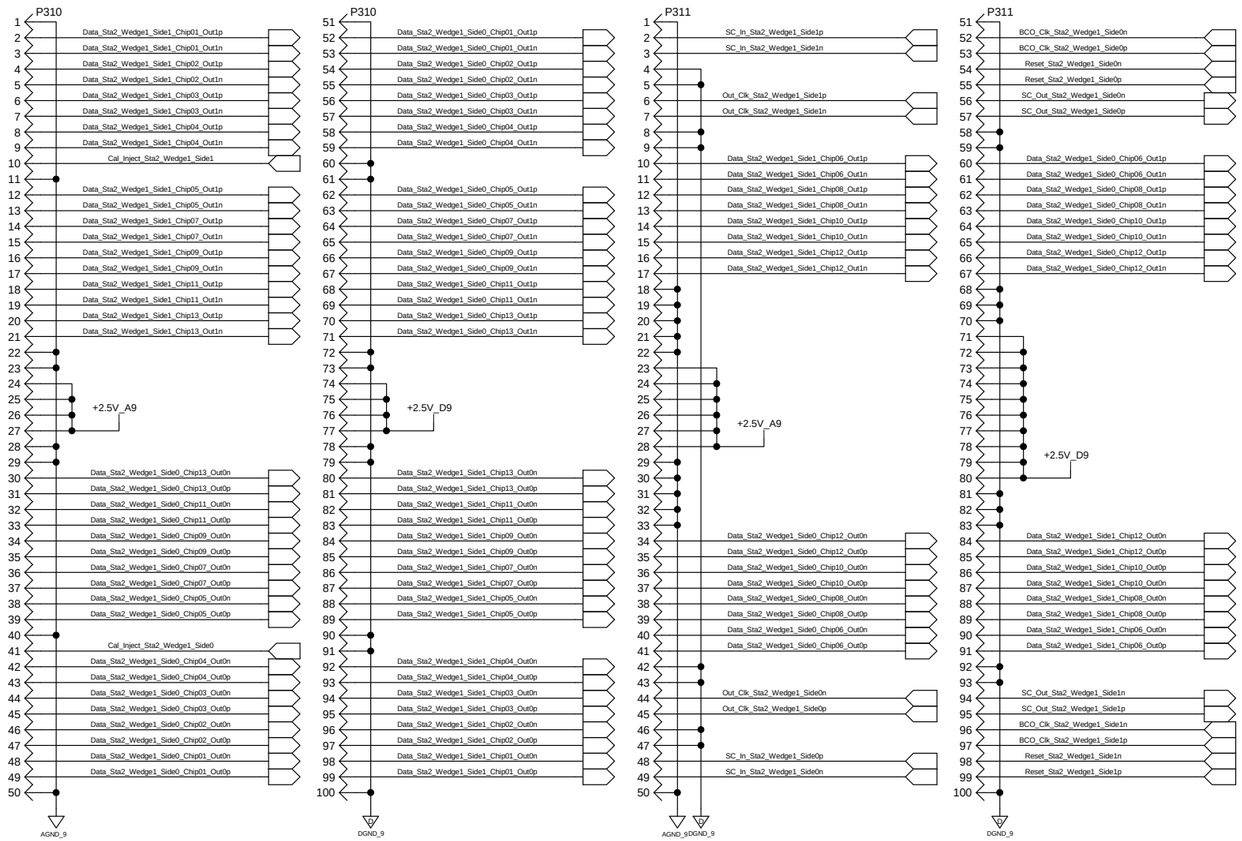

Station 2 Wedge 1

AS OF 10/05/2010 @ 12:50PM

REVISION LETTER	CLASS REVIEW	REVISIONS	DATE	CHANGE BY	CHECK BY	APPROVED BY
—		ORIGINAL ISSUE	—	—	—	—

LOS ALAMOS

LOS ALAMOS NATIONAL LABORATORY
LOS ALAMOS, NEW MEXICO 87545

MENTOR 2005

	NAME	SIGNATURE	DATE	GROUP
ORIGINATED				
DESIGNED				
DRAWN	S. CHACON	S. CHACON	APR 2009	AOT-IC
CHECKED	M. PROKOP	M. PROKOP	APR 2009	AOT-RFE
PROJ. ENGR.	M. PROKOP	M. PROKOP	APR 2009	AOT-RFE
APPROVED				
RELEASED				

CLASSIFICATION OF: DRAWING: U
PART: U DRAWING: U

TITLE

(P-25)

FVTX
ROC PROTOTYPE
SIGNAL CONNECTORS-STATION 2

TOLERANCE (UNLESS OTHERWISE NOTED)
X= ± — 0.XX= ± — ANGULAR ± —
0.X= ± — 0.XXX= ± — FINISH ± —

SCALE	NO. SHEETS	DRAWING NO.	SIZE	SHEET NO.
N/A	1	126Y-267898	D	7

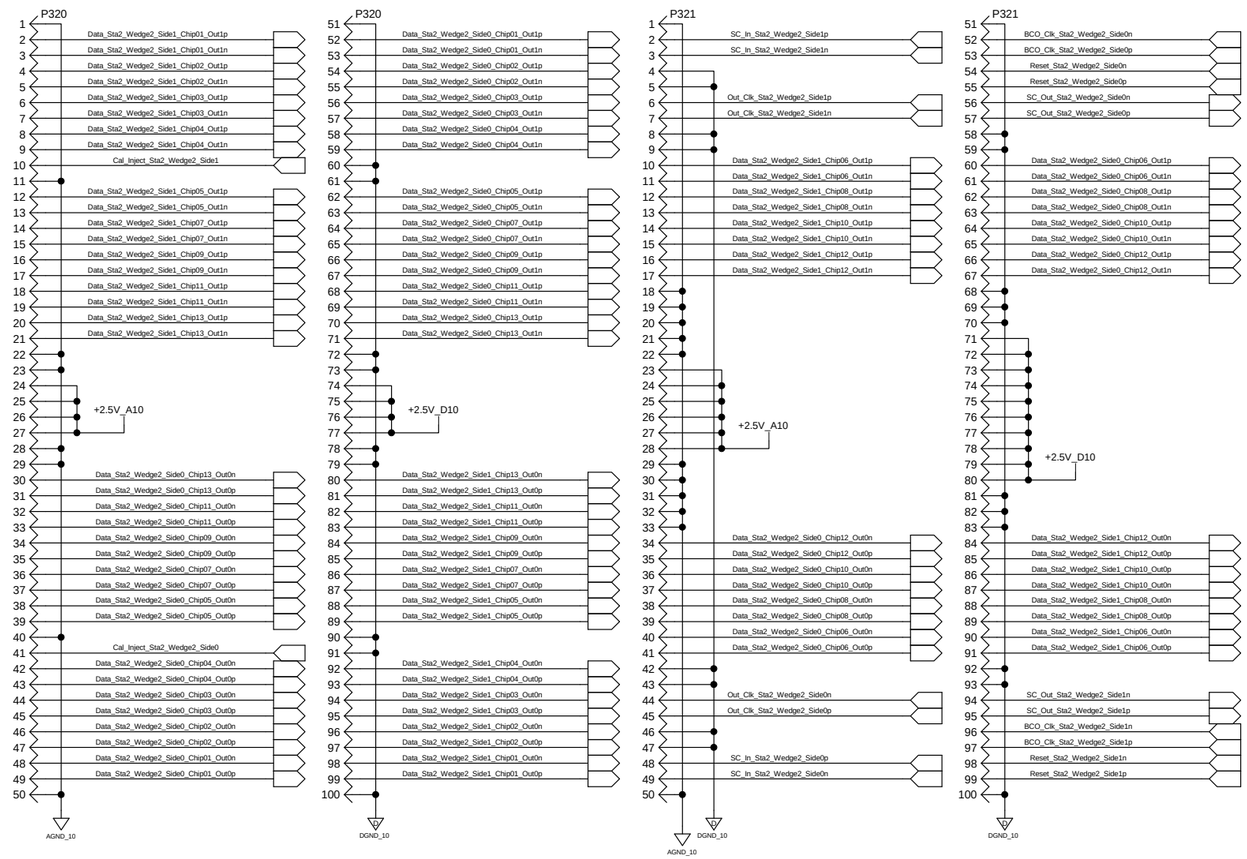

Station 2 Wedge 2

AS OF 10/05/2010 @ 12:50PM

REVISION LETTER	CLASS REVIEW	REVISIONS	DATE	CHANGE BY	CHECK BY	APPROVED BY
—		ORIGINAL ISSUE	—	—	—	—

LOS ALAMOS

LOS ALAMOS NATIONAL LABORATORY
LOS ALAMOS, NEW MEXICO 87545

MENTOR 2005

	NAME	SIGNATURE	DATE	GROUP
ORIGINATED				
DESIGNED				
DRAWN	S. CHACON	S. CHACON	APR 2009	AOT-IC
CHECKED	M. PROKOP	M. PROKOP	APR 2009	AOT-RFE
PROJ. ENGR.	M. PROKOP	M. PROKOP	APR 2009	AOT-RFE
APPROVED				
RELEASED				

CLASSIFICATION OF: DRAWING: U
PART: U DRAWING: U

TITLE
(P-25)
FVTX
ROC PROTOTYPE
SIGNAL CONNECTORS-STATION 2

TOLERANCE (UNLESS OTHERWISE NOTED)
X= ± — 0.XX= ± — ANGULAR ± —
0.X= ± — 0.XXX= ± — FINISH ± —

SCALE	NO. SHEETS	DRAWING NO.	SIZE	SHEET NO.
N/A	1	126Y-267898	D	8

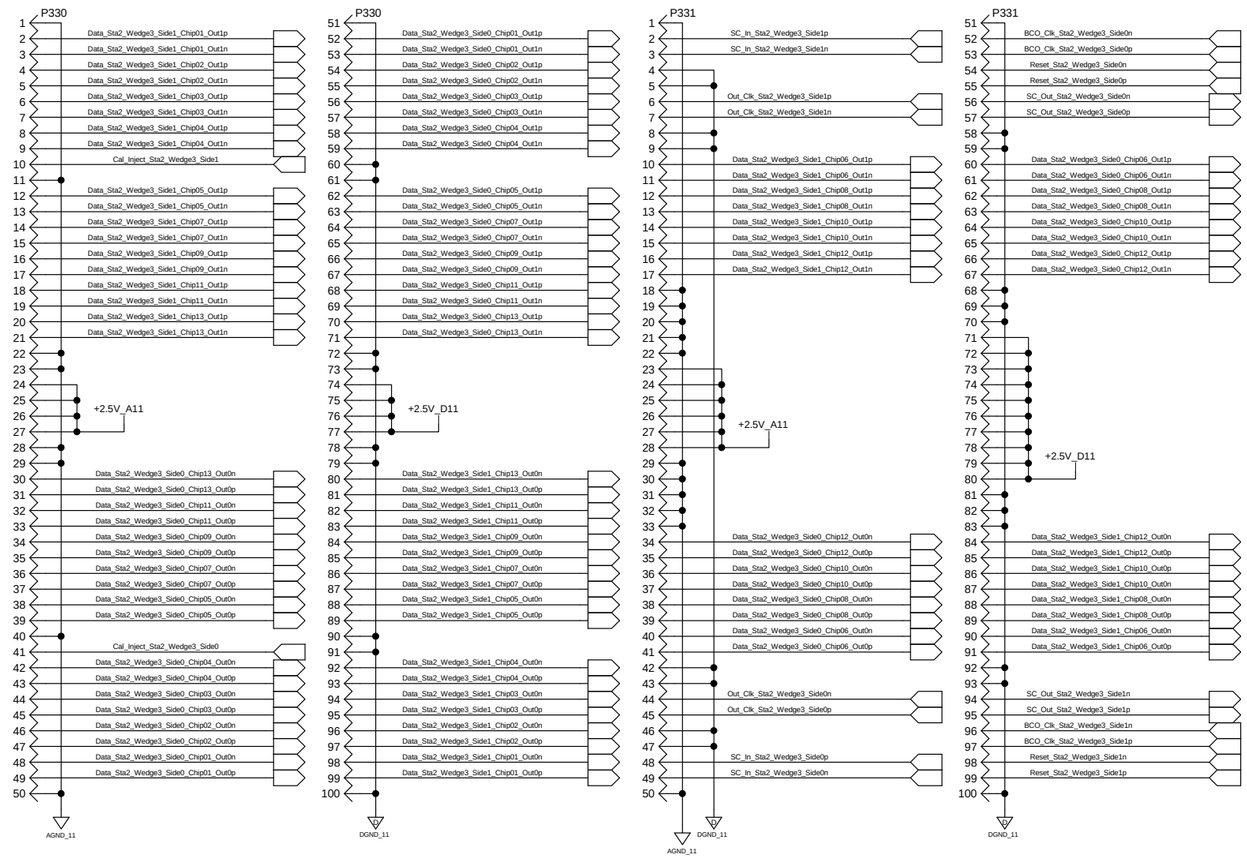

Station 2 Wedge 3

AS OF 10/05/2010 @ 12:50PM

REVISION LETTER	CLASS REVIEW	REVISIONS	DATE	CHANGE BY	CHECK BY	APPROVED BY
—		ORIGINAL ISSUE	—	—	—	—

LOS ALAMOS

LOS ALAMOS NATIONAL LABORATORY
LOS ALAMOS, NEW MEXICO 87545

MENTOR 2005

	NAME	SIGNATURE	DATE	GROUP
ORIGINATED				
DESIGNED				
DRAWN	S. CHACON	S. CHACON	APR 2009	AOT-IC
CHECKED	M. PROKOP	M. PROKOP	APR 2009	AOT-RFE
PROJ. ENGR.	M. PROKOP	M. PROKOP	APR 2009	AOT-RFE
APPROVED				
RELEASED				

CLASSIFICATION OF: DRAWING: U
PART: U DRAWING: U

TITLE

(P-25)

FVTX
ROC PROTOTYPE
SIGNAL CONNECTORS-STATION 2

TOLERANCE (UNLESS OTHERWISE NOTED)
X= ± — 0.XX= ± — ANGULAR ± —
0.X= ± — 0.XXX= ± — FINISH ± —

SCALE	NO. SHEETS	DRAWING NO.	SIZE	SHEET NO.
N/A	1	126Y-267898	D	9

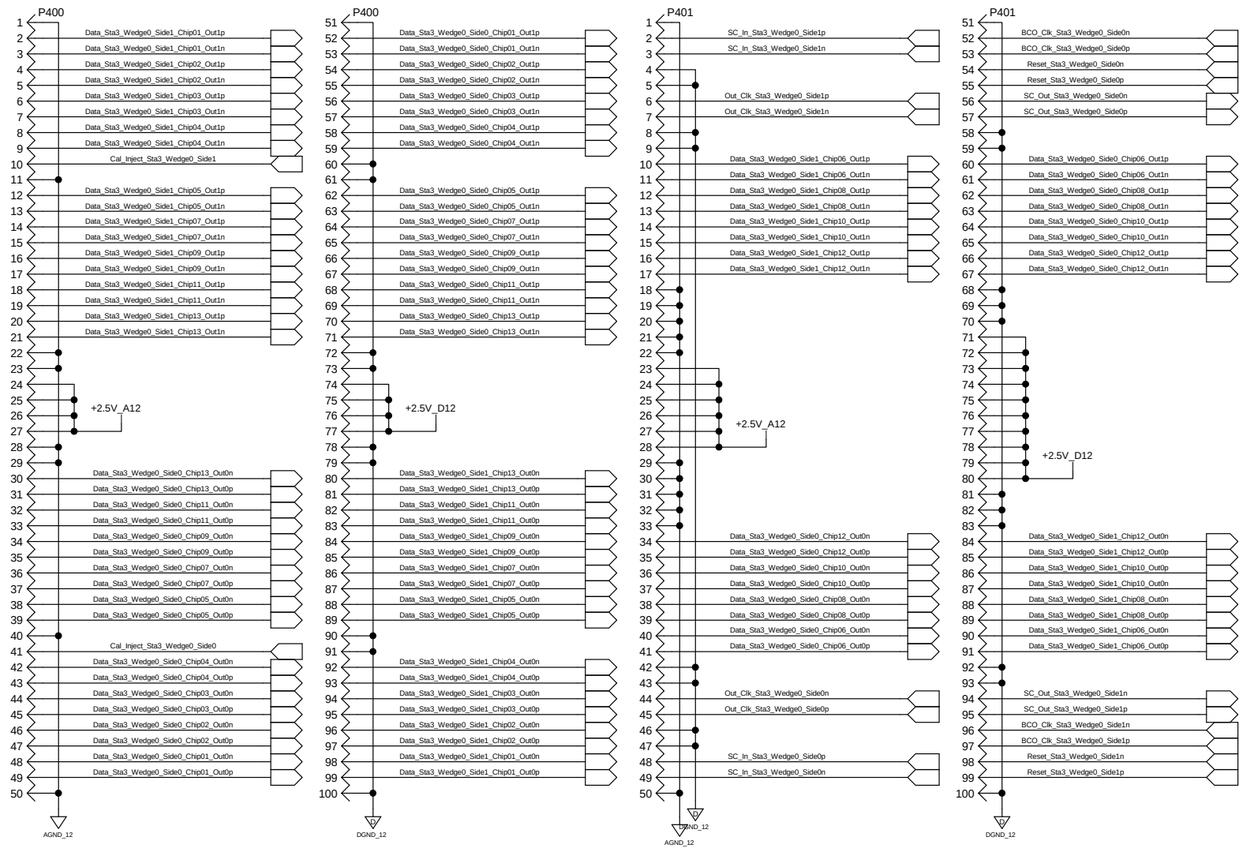

Station 3 Wedge 0

AS OF 10/05/2010 @ 12:50PM

REVISION LETTER	CLASS REVIEW	REVISIONS	DATE	CHANGE BY	CHECK BY	APPROVED BY
—		ORIGINAL ISSUE	—	—	—	—

LOS ALAMOS

LOS ALAMOS NATIONAL LABORATORY
LOS ALAMOS, NEW MEXICO 87545

MENTOR 2005

	NAME	SIGNATURE	DATE	GROUP
ORIGINATED				
DESIGNED				
DRAWN	S. CHACON	S. CHACON	APR 2009	AOT-IC
CHECKED	M. PROKOP	M. PROKOP	APR 2009	AOT-RFE
PROJ. ENGR.	M. PROKOP	M. PROKOP	APR 2009	AOT-RFE
APPROVED				
RELEASED				

CLASSIFICATION OF: DRAWING: U
PART: U DRAWING: U

TITLE
(P-25)
FVTX
ROC PROTOTYPE
SIGNAL CONNECTORS-STATION 3

TOLERANCE (UNLESS OTHERWISE NOTED)
X= ± ___ 0.XX= ± ___ ANGULAR ± ___
0.X= ± ___ 0.XXX= ± ___ FINISH ± ___

SCALE	NO. SHEETS	DRAWING NO.	SIZE	SHEET NO.
N/A	1	126Y-267898	D	10

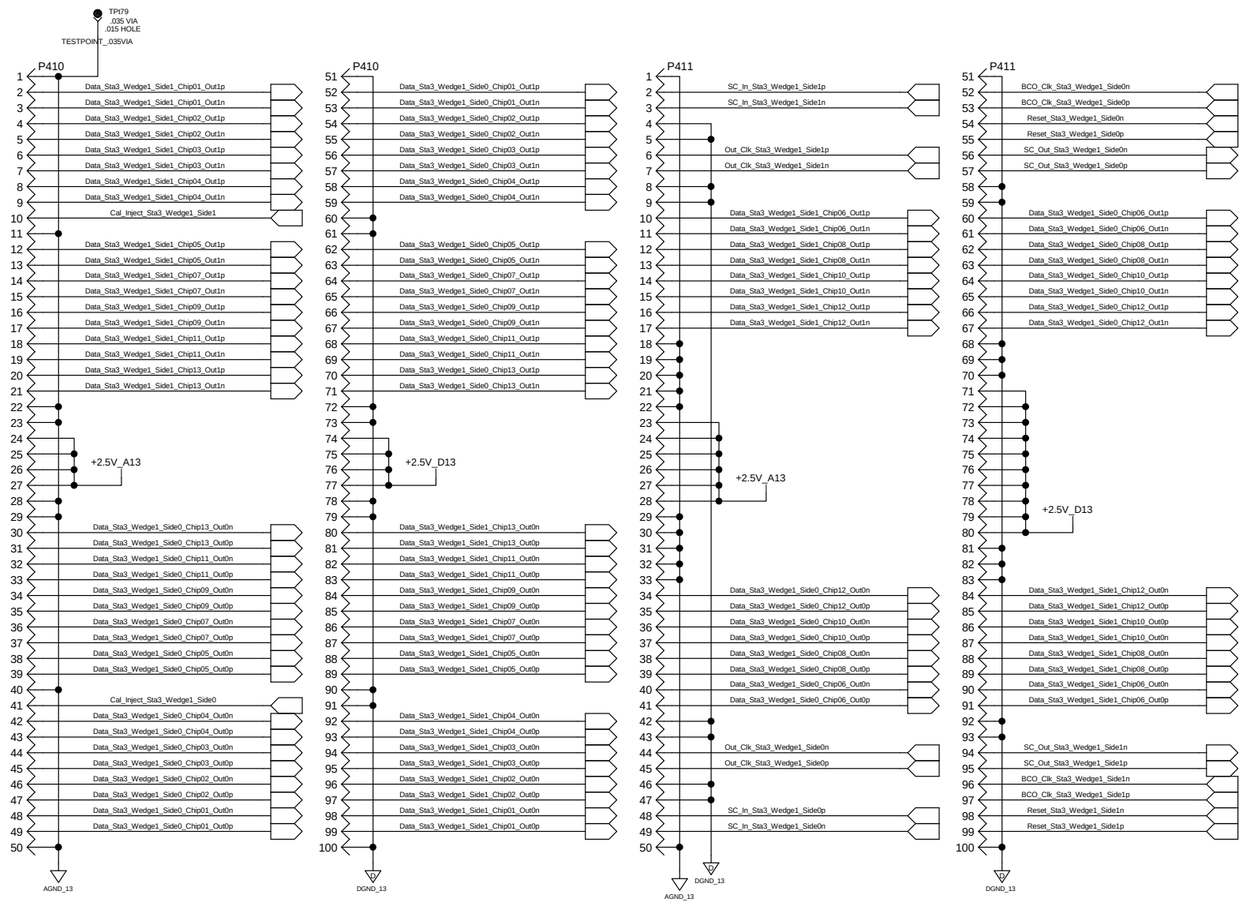

Station 3 Wedge 1

AS OF 10/05/2010 @ 12:50PM

REVISION LETTER	CLASS REVIEW	REVISIONS	DATE	CHANGE BY	CHECK BY	APPROVED BY
—		ORIGINAL ISSUE	—	—	—	—

LOS ALAMOS

LOS ALAMOS NATIONAL LABORATORY
LOS ALAMOS, NEW MEXICO 87545

MENTOR 2005

	NAME	SIGNATURE	DATE	GROUP
ORIGINATED				
DESIGNED				
DRAWN	S. CHACON	S. CHACON	APR 2009	AOT-IC
CHECKED	M. PROKOP	M. PROKOP	APR 2009	AOT-RFE
PROJ. ENGR.	M. PROKOP	M. PROKOP	APR 2009	AOT-RFE
APPROVED				
RELEASED				

CLASSIFICATION OF: DRAWING: U
PART: U DRAWING: U

TITLE

(P-25)

FVTX
ROC PROTOTYPE
SIGNAL CONNECTORS-STATION 3

TOLERANCE (UNLESS OTHERWISE NOTED)
X= ± ___ 0.XX= ± ___ ANGULAR ± ___
0.X= ± ___ 0.XXX= ± ___ FINISH ± ___

SCALE	NO. SHEETS	DRAWING NO.	SIZE	SHEET NO.
N/A	1	126Y-267898	D	11

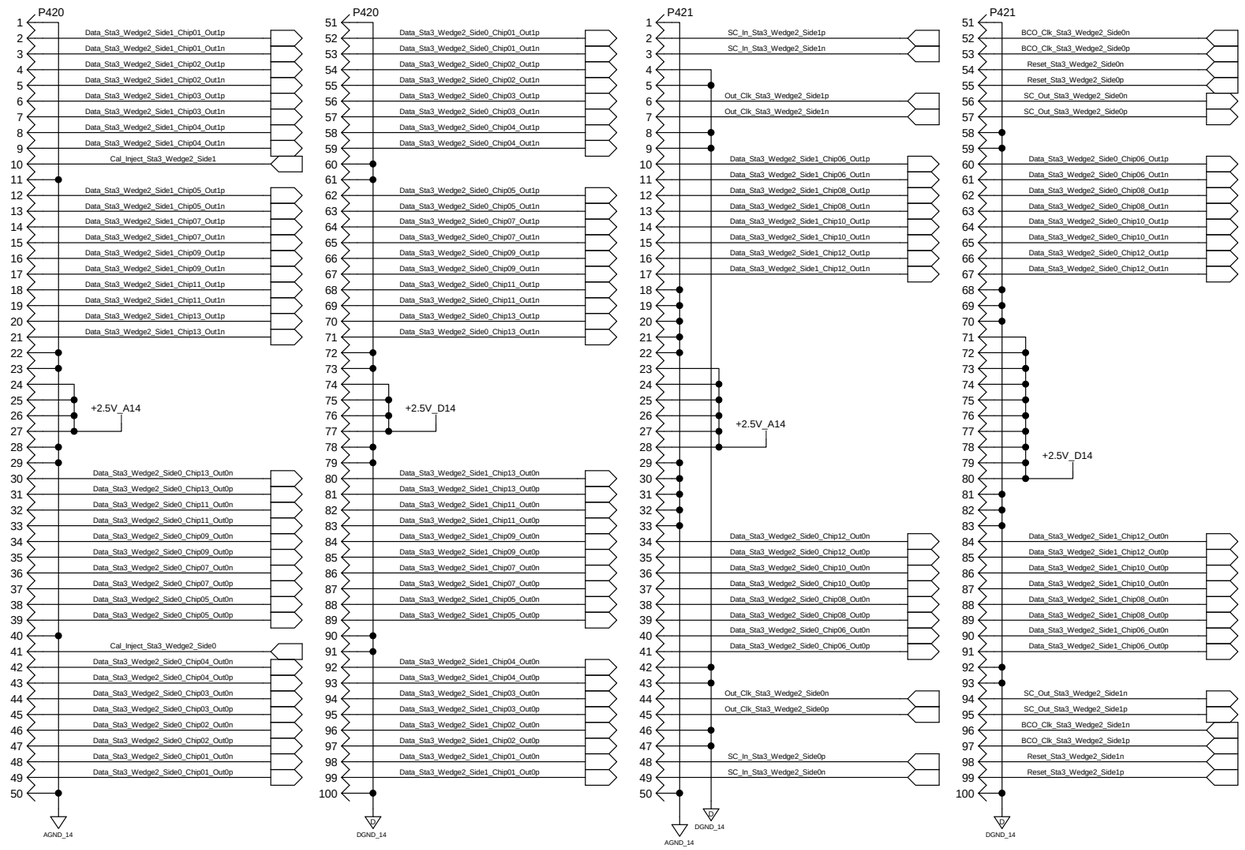

Station 3 Wedge 2

AS OF 10/05/2010 @ 12:50PM

REVISION LETTER	CLASS REVIEW	REVISIONS	DATE	CHANGE BY	CHECK BY	APPROVED BY
—		ORIGINAL ISSUE	—	—	—	—

LOS ALAMOS

LOS ALAMOS NATIONAL LABORATORY
LOS ALAMOS, NEW MEXICO 87545

MENTOR 2005

	NAME	SIGNATURE	DATE	GROUP
ORIGINATED				
DESIGNED				
DRAWN	S. CHACON	S. CHACON	APR 2009	AOT-IC
CHECKED	M. PROKOP	M. PROKOP	APR 2009	AOT-RFE
PROJ. ENGR.	M. PROKOP	M. PROKOP	APR 2009	AOT-RFE
APPROVED				
RELEASED				

CLASSIFICATION OF: DRAWING: U
PART: U DRAWING: U

TITLE

(P-25)

FVTX
ROC PROTOTYPE
SIGNAL CONNECTORS-STATION 3

TOLERANCE (UNLESS OTHERWISE NOTED)
X= ± — 0.XX= ± — ANGULAR ± —
0.X= ± — 0.XXX= ± — FINISH ± —

SCALE	NO. SHEETS	DRAWING NO.	SIZE	SHEET NO.
N/A	1	126Y-267898	D	12

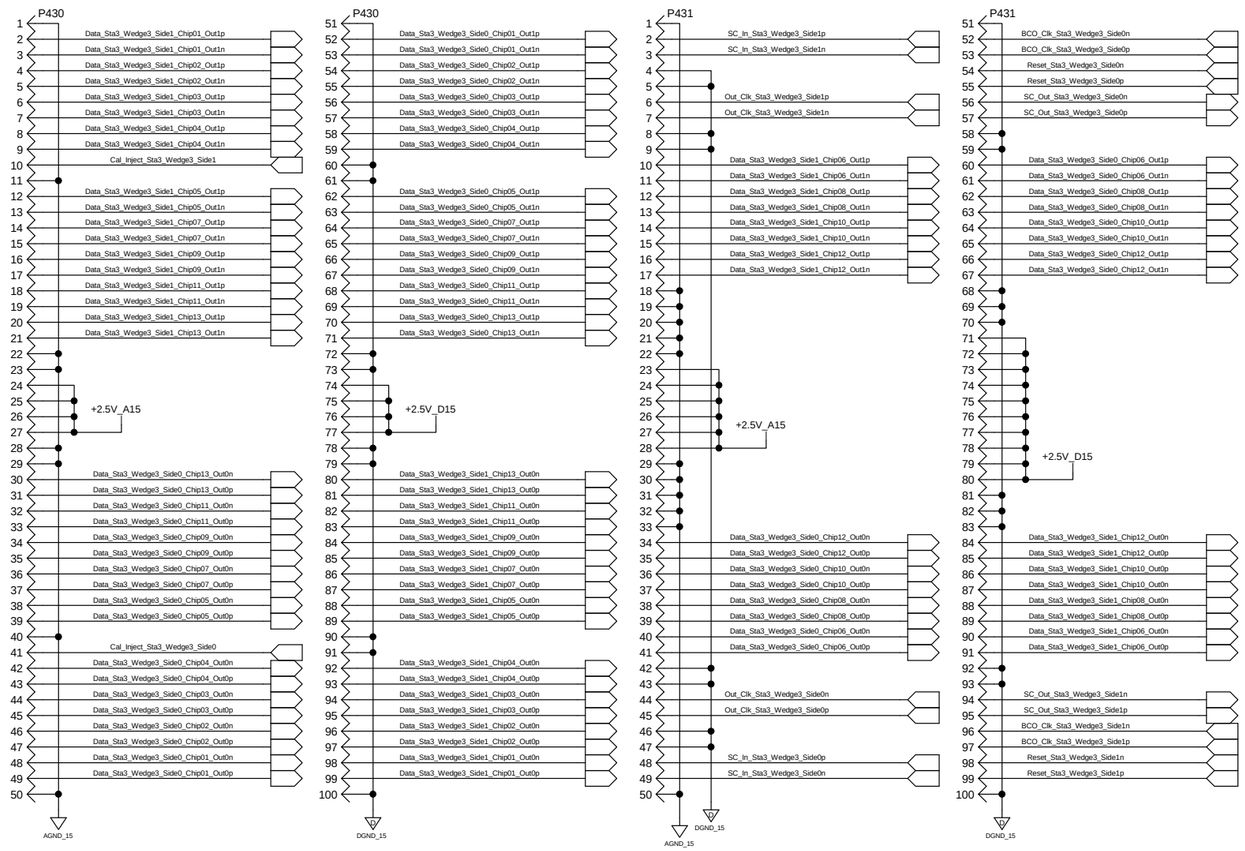

Station 3 Wedge 3

AS OF 10/05/2010 @ 12:50PM

REVISION LETTER	CLASS REVIEW	REVISIONS	DATE	CHANGE BY	CHECK BY	APPROVED BY
—		ORIGINAL ISSUE	—	—	—	—

LOS ALAMOS

LOS ALAMOS NATIONAL LABORATORY
LOS ALAMOS, NEW MEXICO 87545

MENTOR 2005

	NAME	SIGNATURE	DATE	GROUP
ORIGINATED				
DESIGNED				
DRAWN	S. CHACON	S. CHACON	APR 2009	AOT-IC
CHECKED	M. PROKOP	M. PROKOP	APR 2009	AOT-RFE
PROJ. ENGR.	M. PROKOP	M. PROKOP	APR 2009	AOT-RFE
APPROVED				
RELEASED				

CLASSIFICATION OF: DRAWING: U
PART: U DRAWING: U

TITLE

(P-25)

FVTX
ROC PROTOTYPE
SIGNAL CONNECTORS-STATION 3

TOLERANCE (UNLESS OTHERWISE NOTED)
X= ± ___ 0.XX= ± ___ ANGULAR ± ___
0.X= ± ___ 0.XXX= ± ___ FINISH ± ___

SCALE	NO. SHEETS	DRAWING NO.	SIZE	SHEET NO.
N/A	1	126Y-267898	D	13

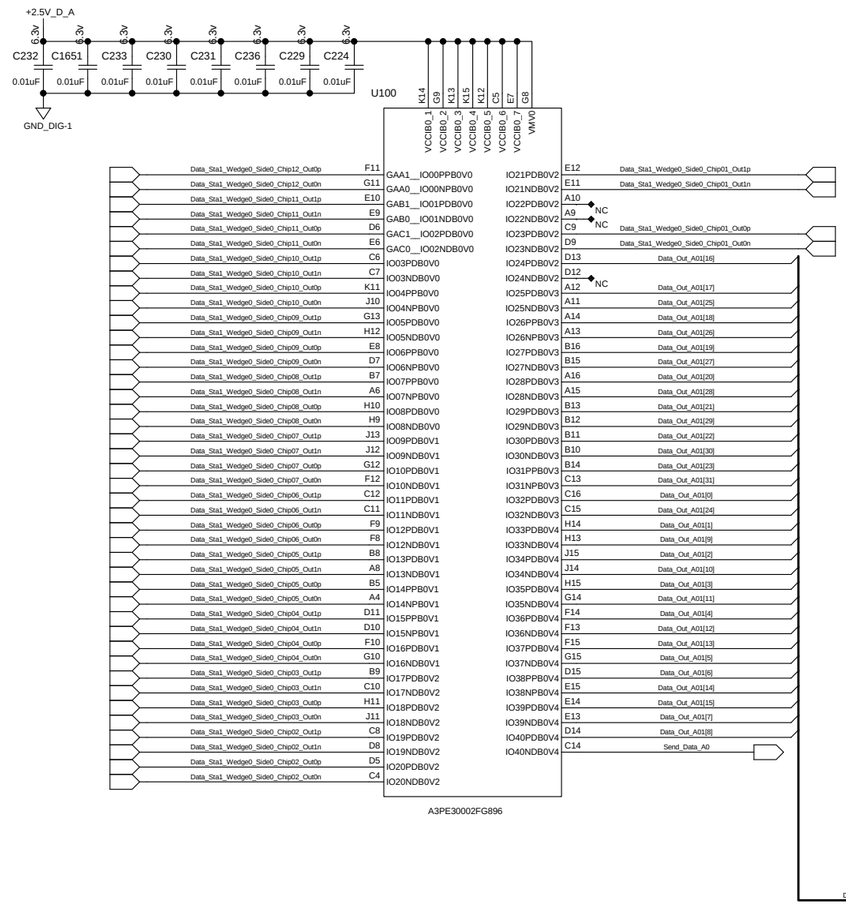

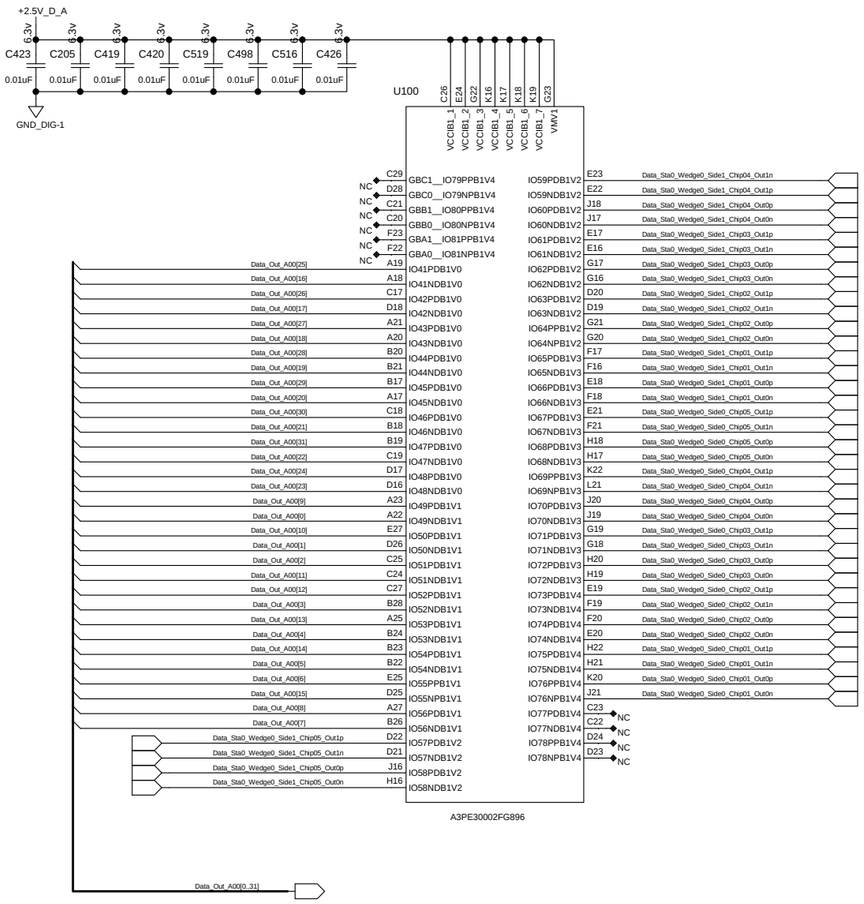

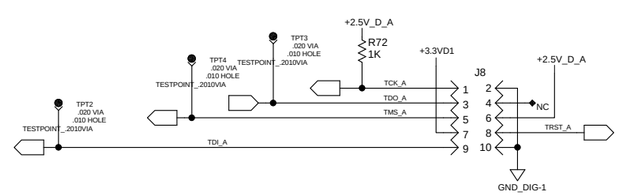

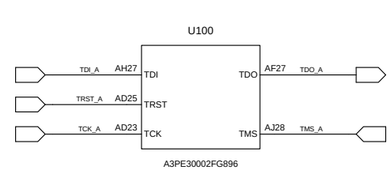

AS OF 10/05/2010 @ 12:50PM

REVISION LETTER	CLASS REVIEW	REVISIONS	DATE	CHANGE BY	CHECK BY	APPROVED BY
—		ORIGINAL ISSUE	—	—	—	—

LOS ALAMOS

LOS ALAMOS NATIONAL LABORATORY
LOS ALAMOS, NEW MEXICO 87545

MENTOR 2005

	NAME	SIGNATURE	DATE	GROUP
ORIGINATED				
DESIGNED				
DRAWN	S. CHACON	S. CHACON	APR 2009	AOT-IC
CHECKED	M. PROKOP	M. PROKOP	APR 2009	AOT-RFE
PROJ. ENGR.	M. PROKOP	M. PROKOP	APR 2009	AOT-RFE
APPROVED				
RELEASED				

CLASSIFICATION OF: DRAWING: U
PART: U DRAWING: U

TITLE

(P-25)
FVTX
ROC PROTOTYPE
FPGA A

TOLERANCE (UNLESS OTHERWISE NOTED)
X= ± — 0.XX= ± — ANGULAR ± —
0.X= ± — 0.XXX= ± — FINISH ± —

SCALE	NO. SHEETS	DRAWING NO.	SIZE	SHEET NO.
N/A	1	126Y-267898	D	14

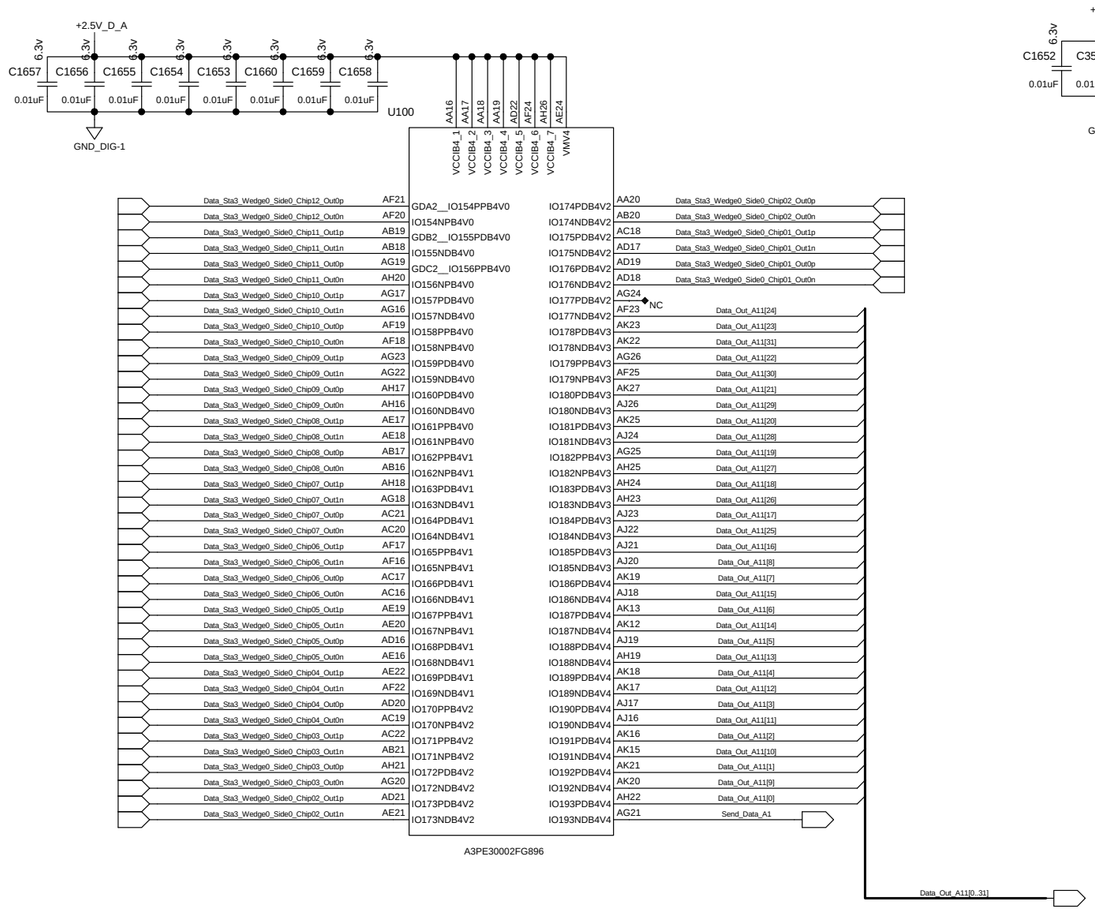

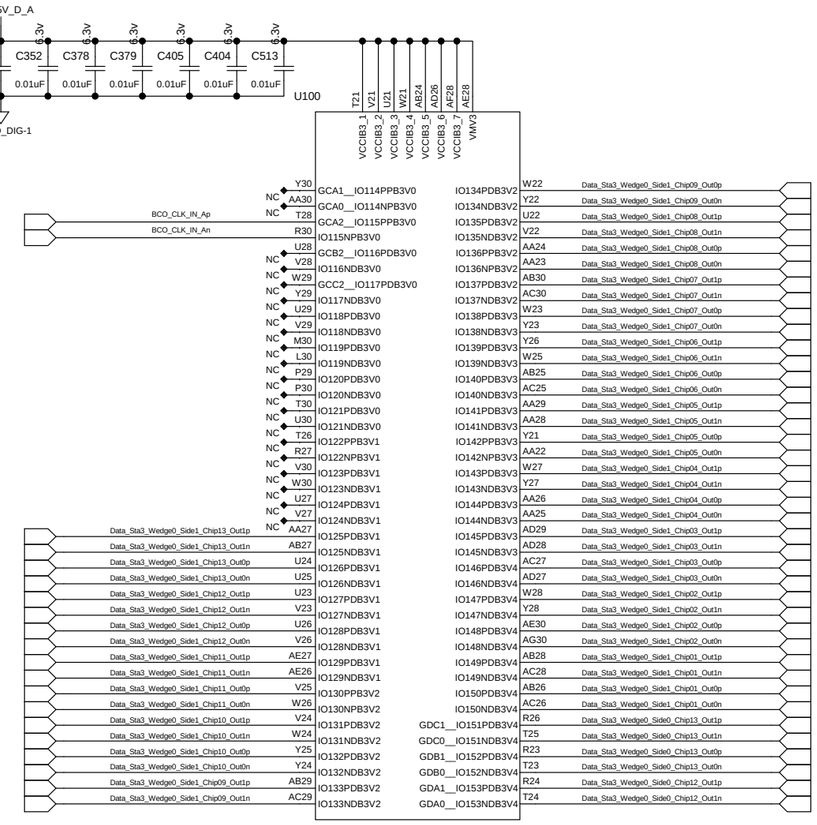

AS OF 10/05/2010 @ 12:50PM

REVISION LETTER	CLASS REVIEW	REVISIONS	DATE	CHANGE BY	CHECK BY	APPROVED BY
—		ORIGINAL ISSUE	—	—	—	—

LOS ALAMOS

LOS ALAMOS NATIONAL LABORATORY
LOS ALAMOS, NEW MEXICO 87545

MENTOR 2005

	NAME	SIGNATURE	DATE	GROUP
ORIGINATED				
DESIGNED				
DRAWN	S. CHACON	S. CHACON	APR 2009	AOT-IC
CHECKED	M. PROKOP	M. PROKOP	APR 2009	AOT-RFE
PROJ. ENGR.	M. PROKOP	M. PROKOP	APR 2009	AOT-RFE
APPROVED				
RELEASED				

CLASSIFICATION OF DRAWING: U
PART: U DRAWING: U

TITLE
(P-25)
FVTX
ROC PROTOTYPE
FPGA A

TOLERANCE (UNLESS OTHERWISE NOTED)
X= ± 0.X= ± 0.XX= ± 0.XXX= ± ANGULAR ± FINISH ±

SCALE	NO. SHEETS	DRAWING NO.	SIZE	SHEET NO.
N/A	1	126Y-267898	D	15

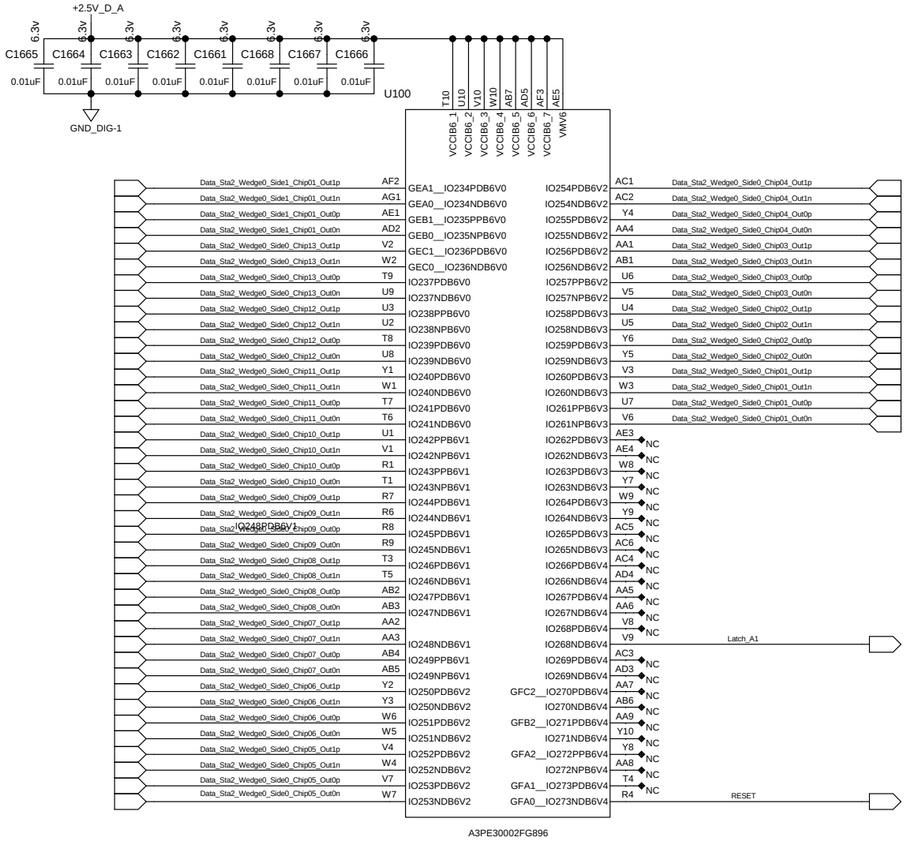

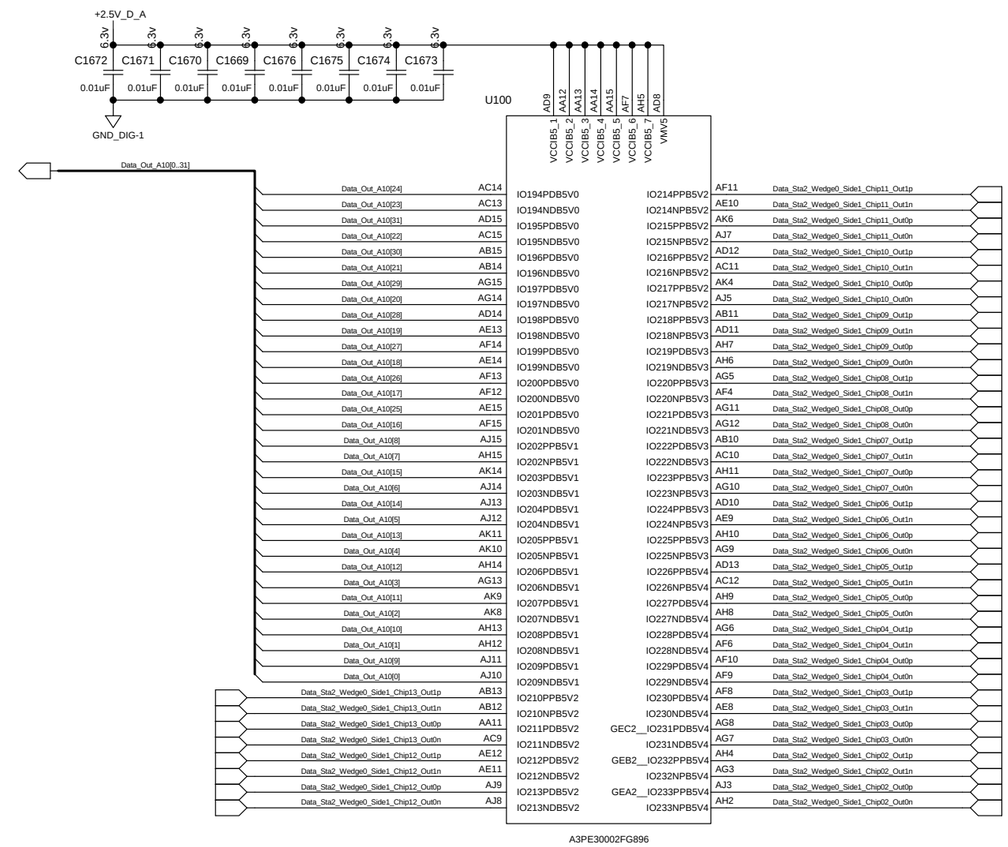

AS OF 10/05/2010 @ 12:50PM

REVISION LETTER	CLASS REVIEW	REVISIONS	DATE	CHANGE BY	CHECK BY	APPROVED BY
—		ORIGINAL ISSUE	—	—	—	—

LOS ALAMOS

LOS ALAMOS NATIONAL LABORATORY
LOS ALAMOS, NEW MEXICO 87545

MENTOR 2005

	NAME	SIGNATURE	DATE	GROUP
ORIGINATED				
DESIGNED				
DRAWN	S. CHACON	S. CHACON	APR 2009	AOT-IC
CHECKED	M. PROKOP	M. PROKOP	APR 2009	AOT-RFE
PROJ. ENGR.	M. PROKOP	M. PROKOP	APR 2009	AOT-RFE
APPROVED				
RELEASED				

CLASSIFICATION OF: DRAWING: U
PART: U DRAWING: U

TITLE
(P-25)
FVTX
ROC PROTOTYPE
FPGA A

TOLERANCE (UNLESS OTHERWISE NOTED)
X= ± — 0.XX= ± — ANGULAR ± —
0.X= ± — 0.XXX= ± — FINISH ± —

SCALE	NO. SHEETS	DRAWING NO.	SIZE	SHEET NO.
N/A	1	126Y-267898	D	16

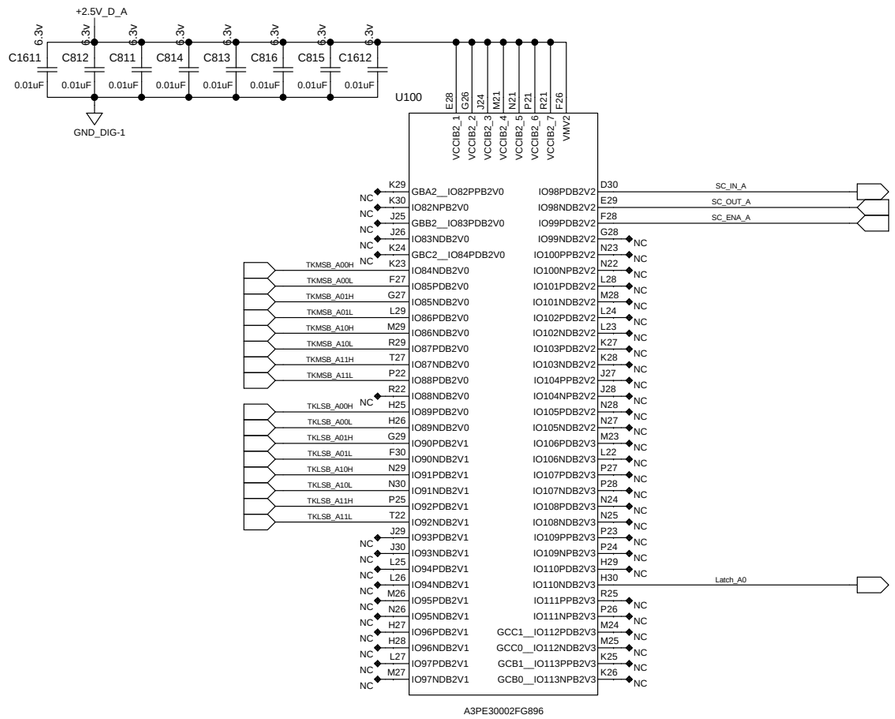

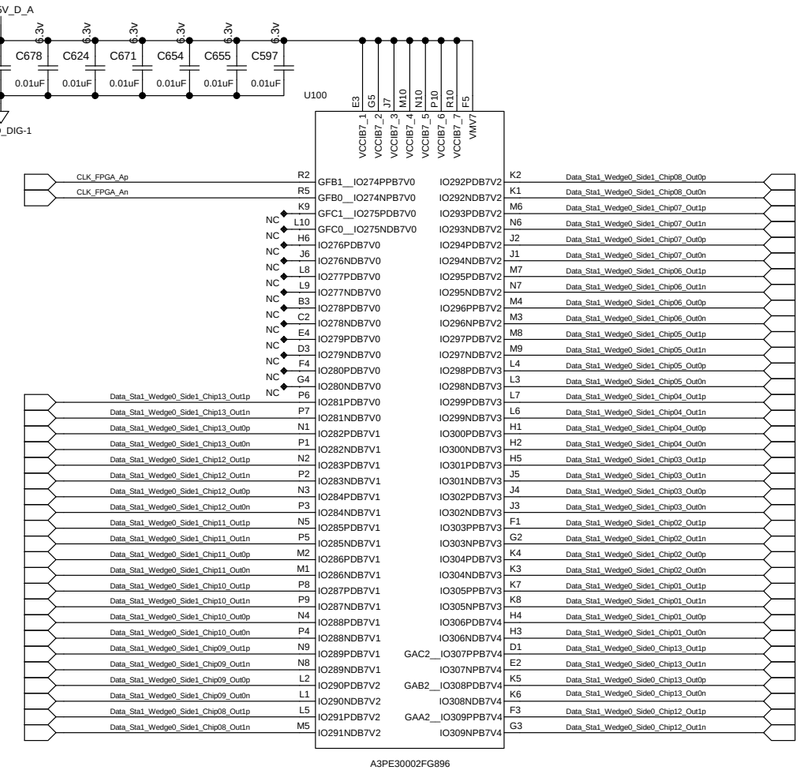

AS OF 10/05/2010 @ 12:50PM

REVISION LETTER	CLASS REVIEW	REVISIONS	DATE	CHANGE BY	CHECK BY	APPROVED BY
—		ORIGINAL ISSUE	—	—	—	—

LOS ALAMOS

LOS ALAMOS NATIONAL LABORATORY
LOS ALAMOS, NEW MEXICO 87545

MENTOR 2005

	NAME	SIGNATURE	DATE	GROUP
ORIGINATED				
DESIGNED				
DRAWN	S. CHACON	S. CHACON	APR 2009	AOT-IC
CHECKED	M. PROKOP	M. PROKOP	APR 2009	AOT-RFE
PROJ. ENGR.	M. PROKOP	M. PROKOP	APR 2009	AOT-RFE
APPROVED				
RELEASED				

CLASSIFICATION OF DRAWING: U
PART: U DRAWING: U

TITLE

(P-25)

FVTX
ROC PROTOTYPE
FPGA A

TOLERANCE (UNLESS OTHERWISE NOTED)
X= ± ——— 0.XX= ± ——— ANGULAR ± ———
0.X= ± ——— 0.XXX= ± ——— FINISH ± ———

SCALE	NO. SHEETS	DRAWING NO.	SIZE	SHEET NO.
N/A	1	126Y-267898	D	17

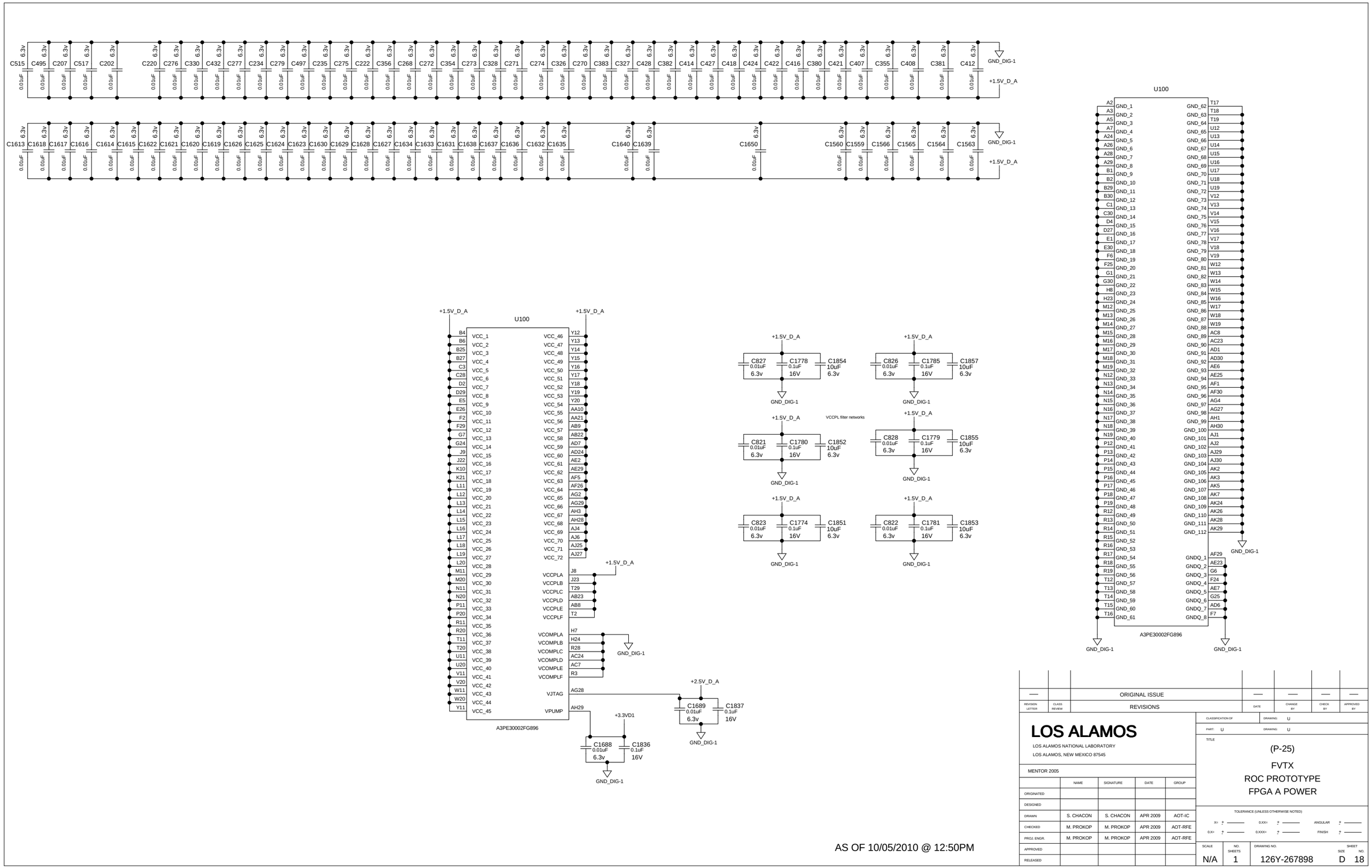

REVISION LETTER	CLASS REVIEW	REVISIONS	DATE	CHANGE BY	CHECK BY	APPROVED BY
—		ORIGINAL ISSUE	—	—	—	—

LOS ALAMOS

LOS ALAMOS NATIONAL LABORATORY
LOS ALAMOS, NEW MEXICO 87545

MENTOR 2005

	NAME	SIGNATURE	DATE	GROUP
ORIGINATED				
DESIGNED				
DRAWN	S. CHACON	S. CHACON	APR 2009	AOT-IC
CHECKED	M. PROKOP	M. PROKOP	APR 2009	AOT-RFE
PROJ. ENGR.	M. PROKOP	M. PROKOP	APR 2009	AOT-RFE
APPROVED				
RELEASED				

CLASSIFICATION OF: DRAWING: U
PART: U DRAWING: U

TITLE

(P-25)

FVTX
ROC PROTOTYPE
FPGA A POWER

TOLERANCE (UNLESS OTHERWISE NOTED)
X.X± ± — 0.XX± ± — ANGULAR ± —
0.X± ± — 0.XXX± ± — FINISH ± —

SCALE	NO. SHEETS	DRAWING NO.	SIZE	SHEET NO.
N/A	1	126Y-267898	D	18

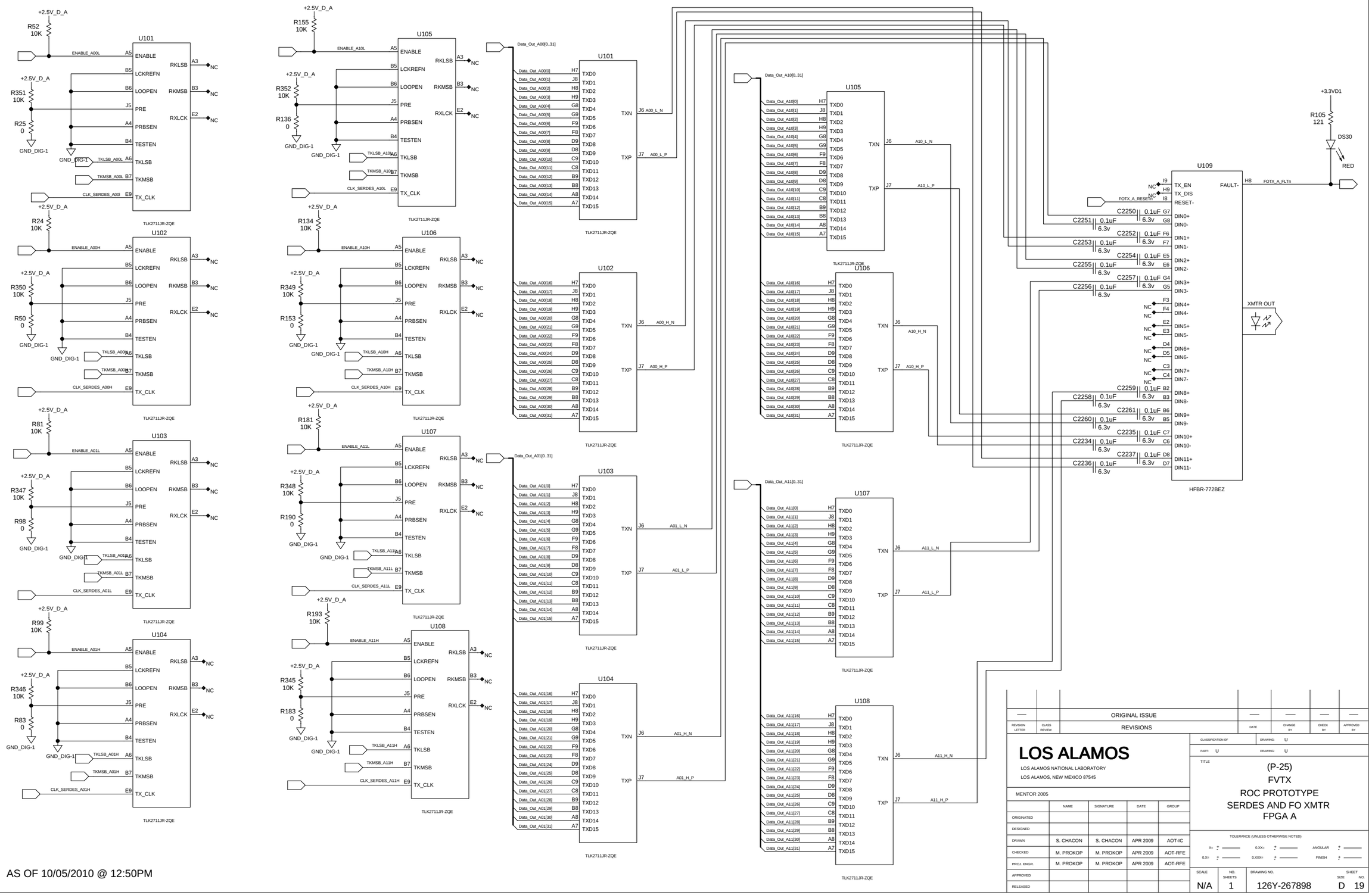

AS OF 10/05/2010 @ 12:50PM

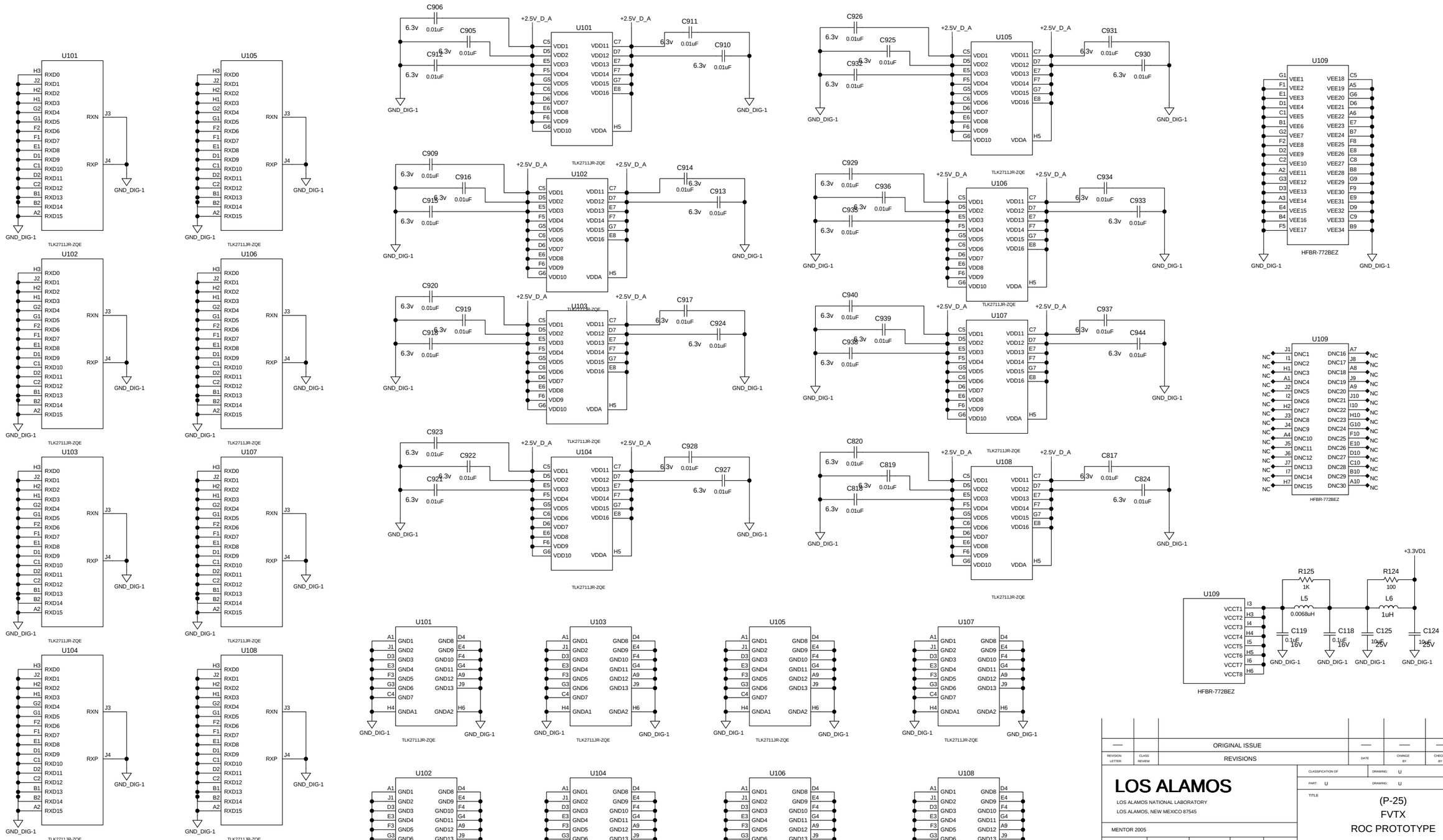

—		ORIGINAL ISSUE	—	—	—	—
REVISION LETTER	CLASS REVIEW	REVISIONS	DATE	CHANGE BY	CHECK BY	APPROVED BY

LOS ALAMOS

LOS ALAMOS NATIONAL LABORATORY
LOS ALAMOS, NEW MEXICO 87545

MENTOR 2005

	NAME	SIGNATURE	DATE	GROUP
ORIGINATED				
DESIGNED				
DRAWN	S. CHACON	S. CHACON	APR 2009	AOT-IC
CHECKED	M. PROKOP	M. PROKOP	APR 2009	AOT-RFE
PROJ. ENGR.	M. PROKOP	M. PROKOP	APR 2009	AOT-RFE
APPROVED				
RELEASED				

CLASSIFICATION OF: DRAWING: U
PART: U DRAWING: U

TITLE
(P-25)
FVTX
ROC PROTOTYPE
SERDES AND FO TX PWR
FPGA A

TOLERANCE (UNLESS OTHERWISE NOTED)
X= ± 0.XX= ± ANGULAR ±
0.X= ± 0.XXX= ± FINISH ±

SCALE	NO. SHEETS	DRAWING NO.	SIZE	SHEET NO.
N/A	1	126Y-267898	D	20

AS OF 10/05/2010 @ 12:50PM

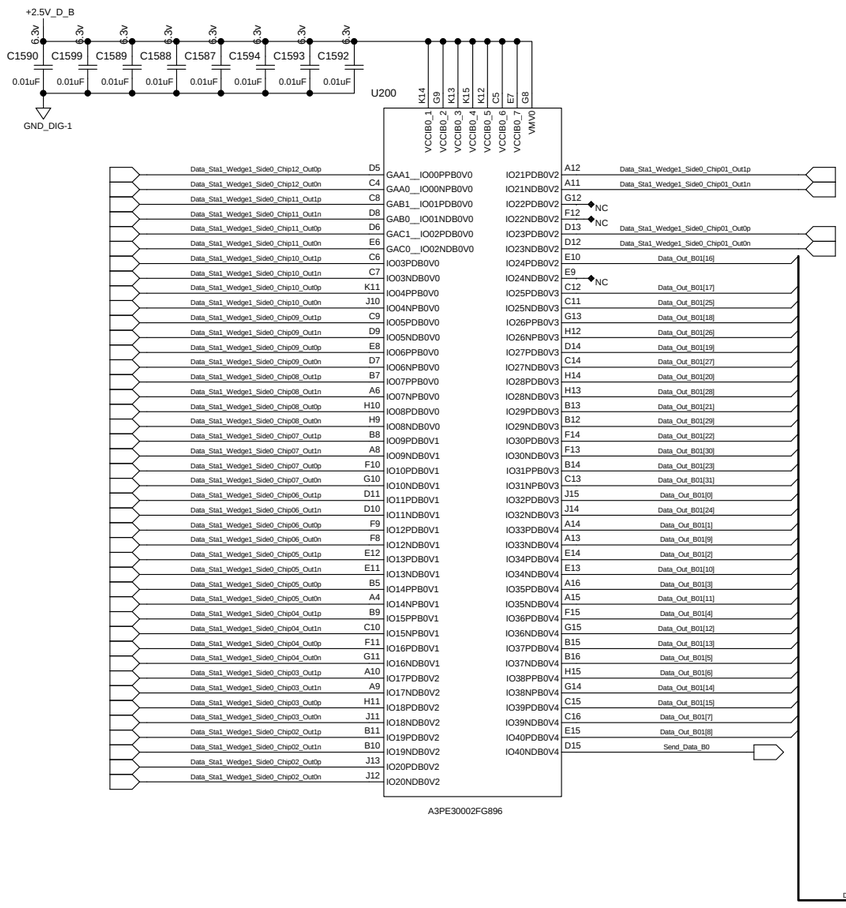

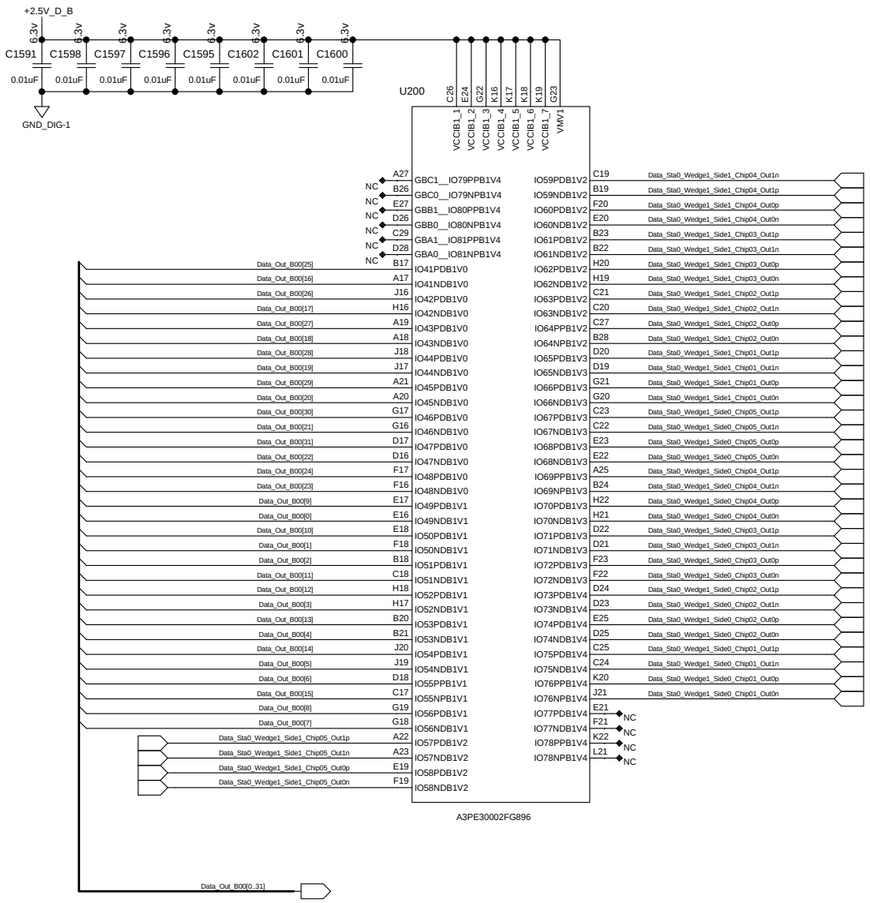

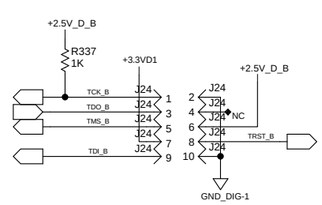

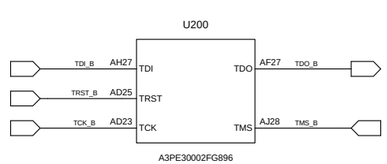

AS OF 10/05/2010 @ 12:50PM

REVISION LETTER	CLASS REVIEW	REVISIONS	DATE	CHANGE BY	CHECK BY	APPROVED BY
—		ORIGINAL ISSUE	—	—	—	—

LOS ALAMOS

LOS ALAMOS NATIONAL LABORATORY
LOS ALAMOS, NEW MEXICO 87545

MENTOR 2005

	NAME	SIGNATURE	DATE	GROUP
ORIGINATED				
DESIGNED				
DRAWN	S. CHACON	S. CHACON	APR 2009	AOT-IC
CHECKED	M. PROKOP	M. PROKOP	APR 2009	AOT-RFE
PROJ. ENGR.	M. PROKOP	M. PROKOP	APR 2009	AOT-RFE
APPROVED				
RELEASED				

CLASSIFICATION OF: DRAWING: U
PART: U DRAWING: U

TITLE

(P-25)

FVTX
ROC PROTOTYPE
FPGA B

TOLERANCE (UNLESS OTHERWISE NOTED)
X.X± ± — 0.XX± ± — ANGULAR ± —
0.X± ± — 0.XXX± ± — FINISH ± —

SCALE	NO. SHEETS	DRAWING NO.	SIZE	SHEET NO.
N/A	1	126Y-267898	D	21

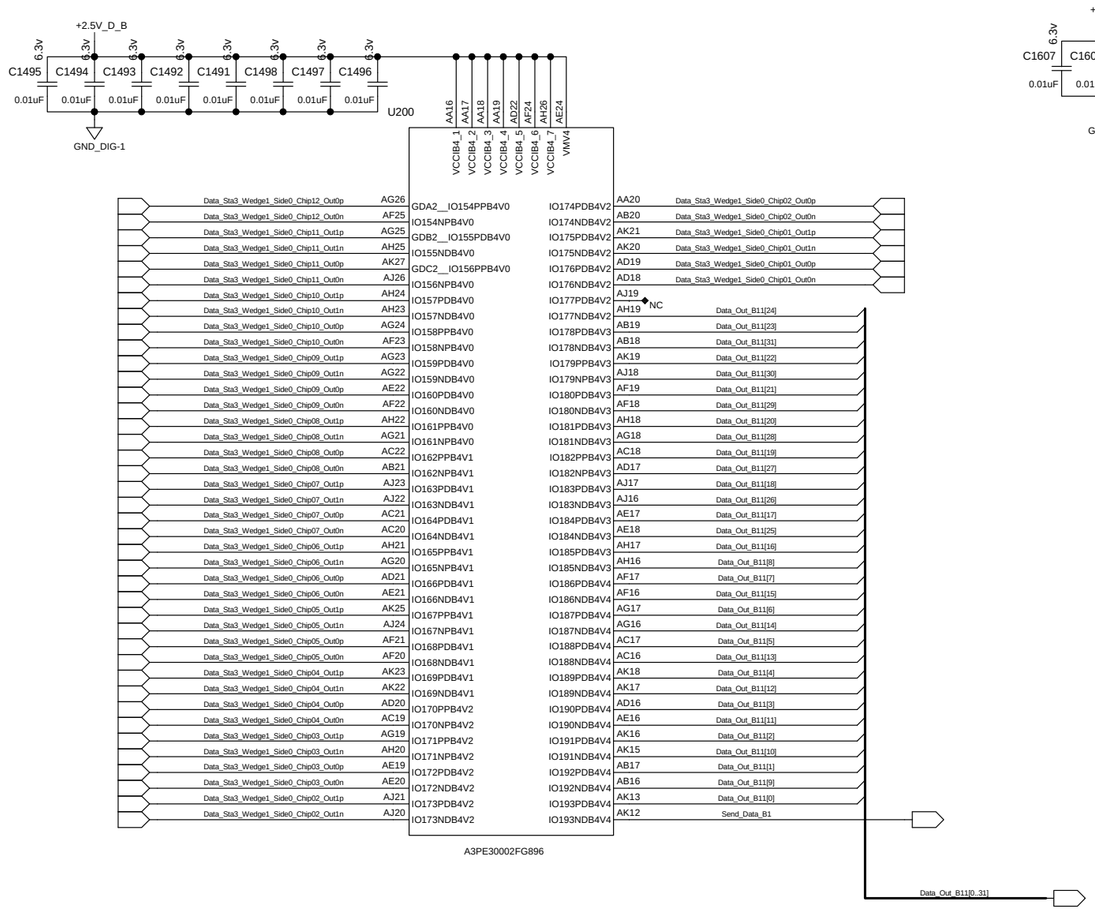

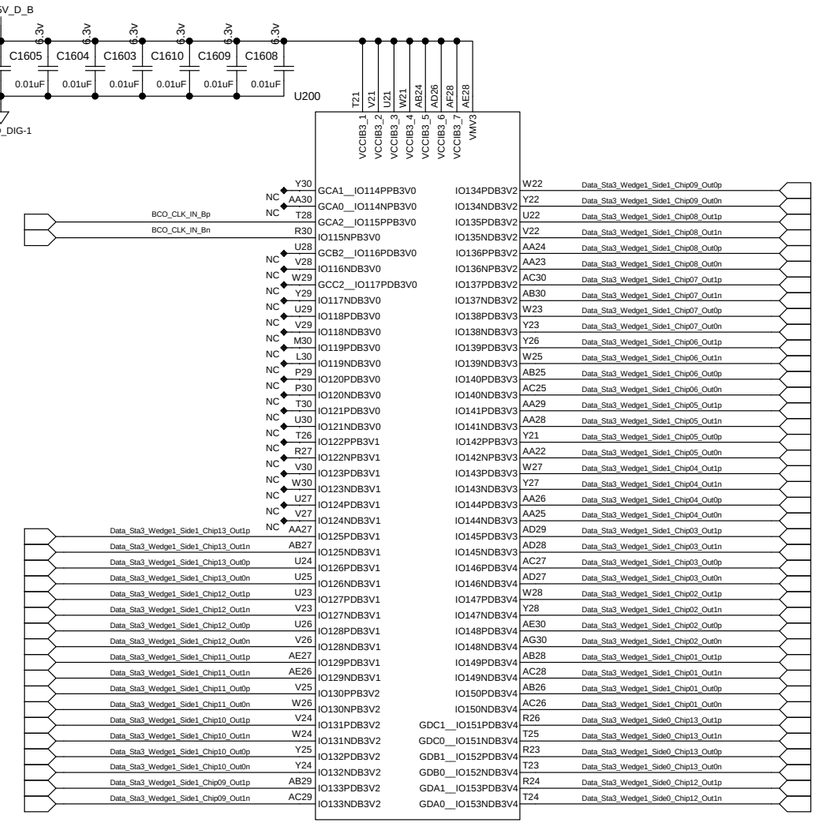

AS OF 10/05/2010 @ 12:50PM

REVISION LETTER	CLASS REVIEW	REVISIONS	DATE	CHANGE BY	CHECK BY	APPROVED BY
—		ORIGINAL ISSUE	—	—	—	—

LOS ALAMOS

LOS ALAMOS NATIONAL LABORATORY
LOS ALAMOS, NEW MEXICO 87545

MENTOR 2005

	NAME	SIGNATURE	DATE	GROUP
ORIGINATED				
DESIGNED				
DRAWN	S. CHACON	S. CHACON	APR 2009	AOT-IC
CHECKED	M. PROKOP	M. PROKOP	APR 2009	AOT-RFE
PROJ. ENGR.	M. PROKOP	M. PROKOP	APR 2009	AOT-RFE
APPROVED				
RELEASED				

CLASSIFICATION OF: DRAWING: U
PART: U DRAWING: U

TITLE
(P-25)
FVTX
ROC PROTOTYPE
FPGA B

TOLERANCE (UNLESS OTHERWISE NOTED)
X= ± 0.X= ± 0.XX= ± 0.XXX= ± ANGULAR ± FINISH ±

SCALE	NO. SHEETS	DRAWING NO.	SIZE	SHEET NO.
N/A	1	126Y-267898	D	22

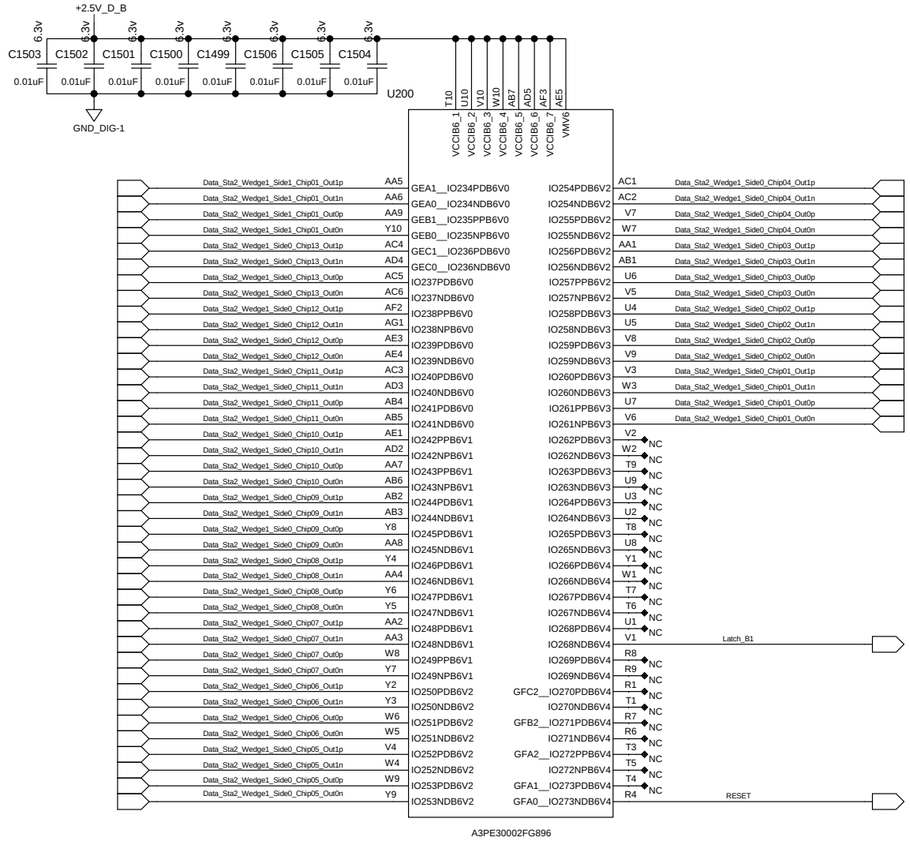

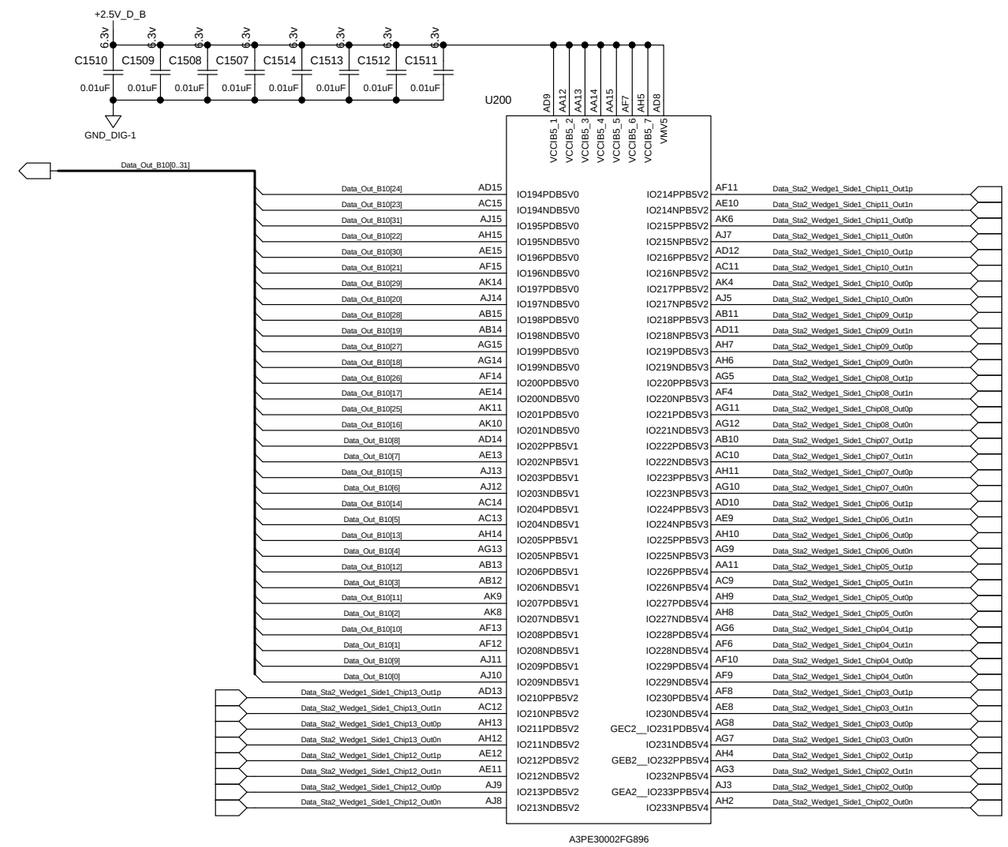

AS OF 10/05/2010 @ 12:50PM

REVISION LETTER	CLASS REVIEW	REVISIONS	DATE	CHANGE BY	CHECK BY	APPROVED BY
—		ORIGINAL ISSUE	—	—	—	—

LOS ALAMOS

LOS ALAMOS NATIONAL LABORATORY
LOS ALAMOS, NEW MEXICO 87545

MENTOR 2005

	NAME	SIGNATURE	DATE	GROUP
ORIGINATED				
DESIGNED				
DRAWN	S. CHACON	S. CHACON	APR 2009	AOT-IC
CHECKED	M. PROKOP	M. PROKOP	APR 2009	AOT-RFE
PROJ. ENGR.	M. PROKOP	M. PROKOP	APR 2009	AOT-RFE
APPROVED				
RELEASED				

CLASSIFICATION OF: DRAWING: U
PART: U DRAWING: U

TITLE
(P-25)
FVTX
ROC PROTOTYPE
FPGA B

TOLERANCE (UNLESS OTHERWISE NOTED)
X= ± — 0.XX= ± — ANGULAR ± —
0.X= ± — 0.XXX= ± — FINISH ± —

SCALE	NO. SHEETS	DRAWING NO.	SIZE	SHEET NO.
N/A	1	126Y-267898	D	23

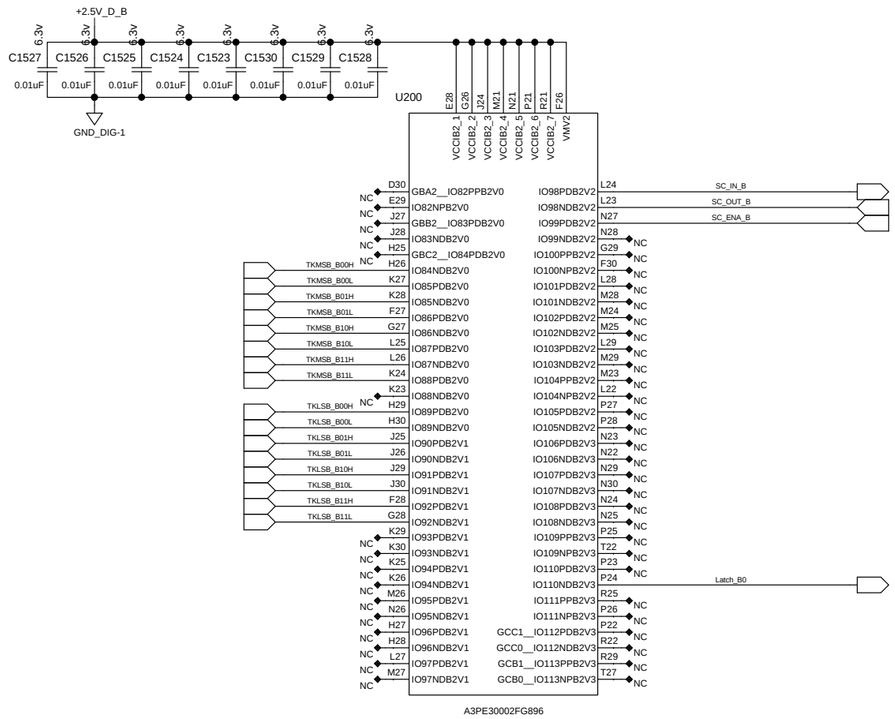

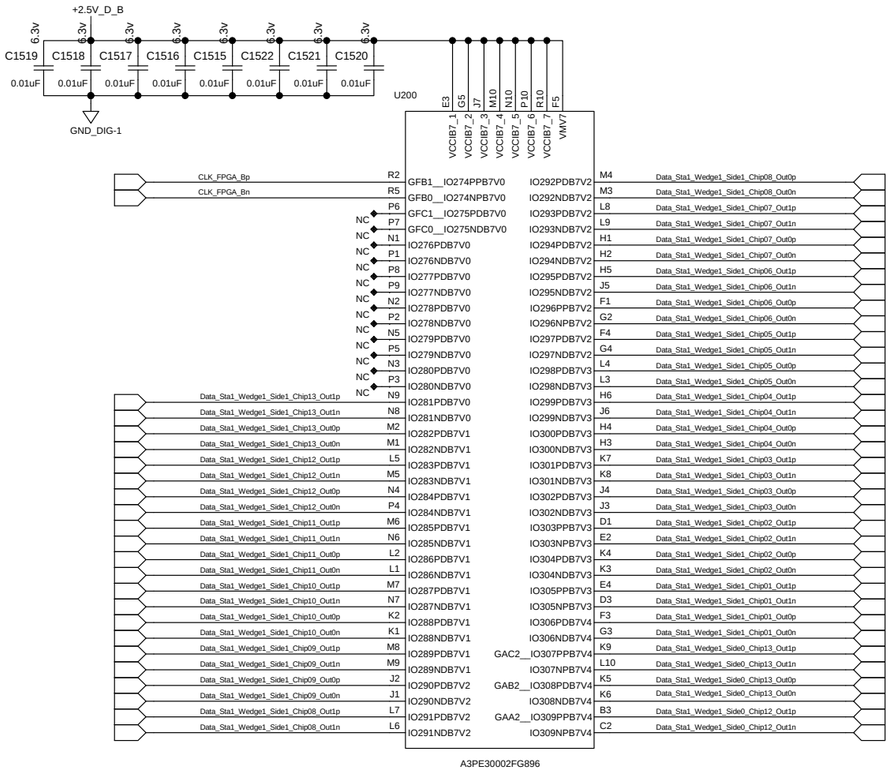

AS OF 10/05/2010 @ 12:50PM

REVISION LETTER	CLASS REVIEW	REVISIONS	DATE	CHANGE BY	CHECK BY	APPROVED BY
—		ORIGINAL ISSUE	—	—	—	—

LOS ALAMOS

LOS ALAMOS NATIONAL LABORATORY
LOS ALAMOS, NEW MEXICO 87545

MENTOR 2005

	NAME	SIGNATURE	DATE	GROUP
ORIGINATED				
DESIGNED				
DRAWN	S. CHACON	S. CHACON	APR 2009	AOT-IC
CHECKED	M. PROKOP	M. PROKOP	APR 2009	AOT-RFE
PROJ. ENGR.	M. PROKOP	M. PROKOP	APR 2009	AOT-RFE
APPROVED				
RELEASED				

CLASSIFICATION OF DRAWING: U
PART: U DRAWING: U

TITLE

(P-25)

FVTX
ROC PROTOTYPE
FPGA B

TOLERANCE (UNLESS OTHERWISE NOTED)
X= ± ——— 0.XX= ± ——— ANGULAR ± ———
0.X= ± ——— 0.XXX= ± ——— FINISH ± ———

SCALE	NO. SHEETS	DRAWING NO.	SIZE	SHEET NO.
N/A	1	126Y-267898	D	24

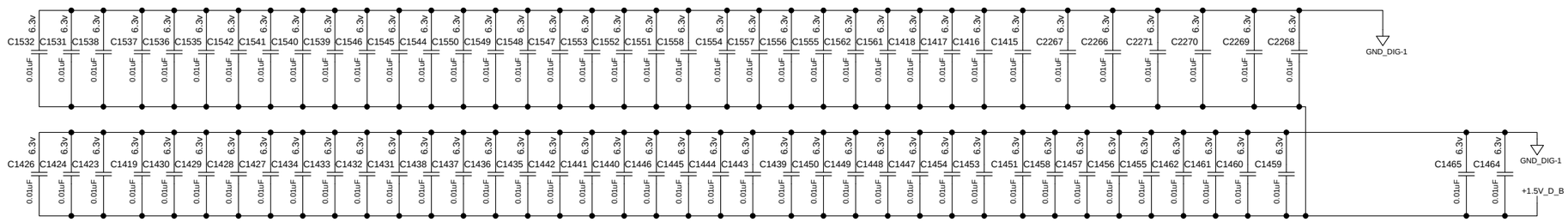

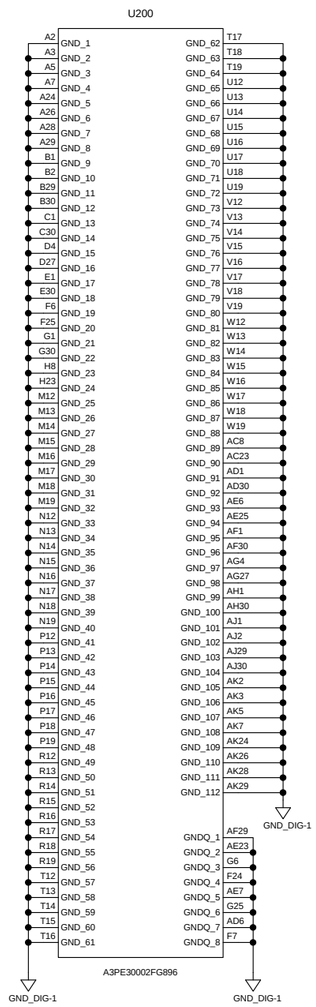

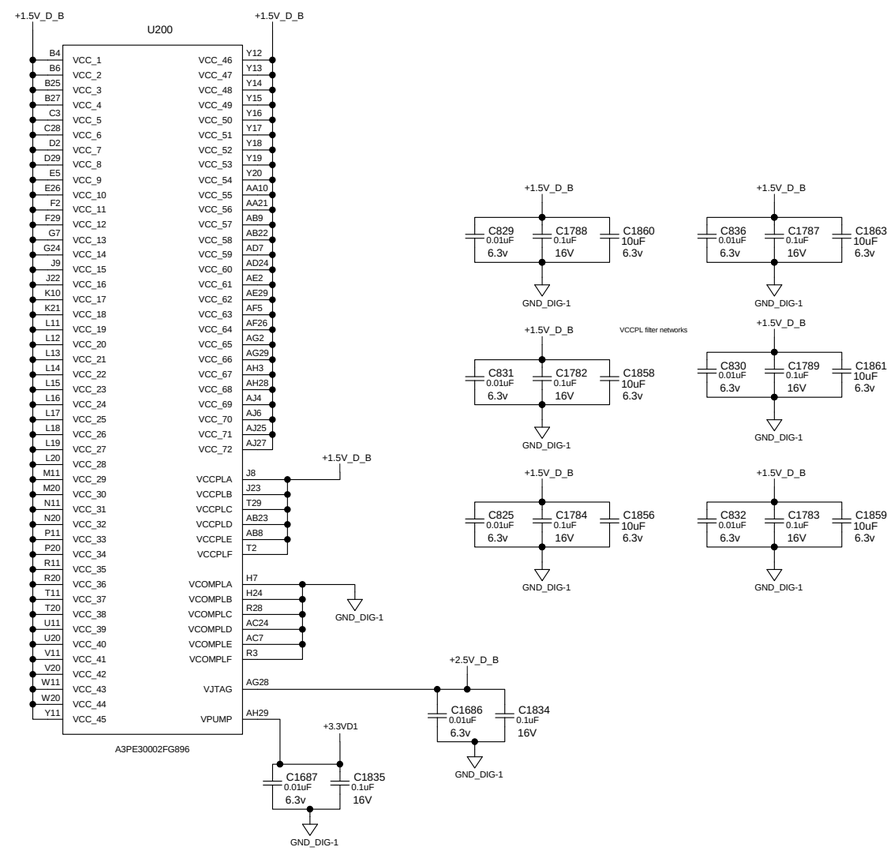

AS OF 10/05/2010 @ 12:50PM

REVISION LETTER	CLASS REVIEW	REVISIONS	DATE	CHANGE BY	CHECK BY	APPROVED BY
—		ORIGINAL ISSUE	—	—	—	—

LOS ALAMOS

LOS ALAMOS NATIONAL LABORATORY
LOS ALAMOS, NEW MEXICO 87545

MENTOR 2005

	NAME	SIGNATURE	DATE	GROUP
ORIGINATED				
DESIGNED				
DRAWN	S. CHACON	S. CHACON	APR 2009	AOT-IC
CHECKED	M. PROKOP	M. PROKOP	APR 2009	AOT-RFE
PROJ. ENGR.	M. PROKOP	M. PROKOP	APR 2009	AOT-RFE
APPROVED				
RELEASED				

CLASSIFICATION OF: U — DRAWING: U
PART: U — DRAWING: U

TITLE

(P-25)

FVTX
ROC PROTOTYPE
FPGA B POWER

TOLERANCE (UNLESS OTHERWISE NOTED)
X= ± — 0.XX= ± — ANGULAR ± —
0.X= ± — 0.XXX= ± — FINISH ± —

SCALE	NO. SHEETS	DRAWING NO.	SIZE	SHEET NO.
N/A	1	126Y-267898	D	25

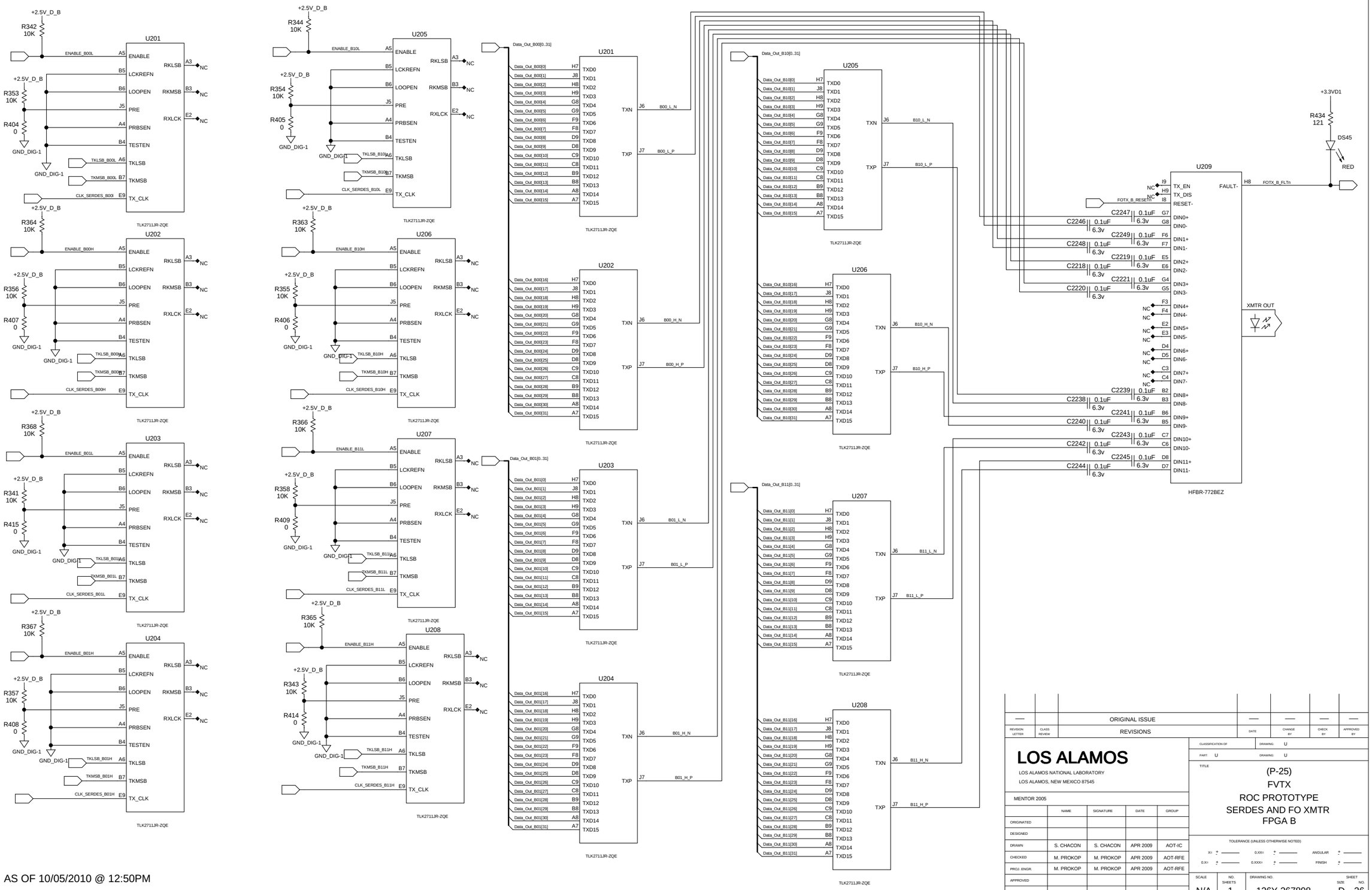

AS OF 10/05/2010 @ 12:50PM

REVISION LETTER	CLASS REVIEW	REVISIONS	DATE	CHANGE BY	CHECK BY	APPROVED BY
—		ORIGINAL ISSUE	—	—	—	—

LOS ALAMOS

LOS ALAMOS NATIONAL LABORATORY
LOS ALAMOS, NEW MEXICO 87545

MENTOR 2005

	NAME	SIGNATURE	DATE	GROUP
ORIGINATED				
DESIGNED				
DRAWN	S. CHACON	S. CHACON	APR 2009	AOT-IC
CHECKED	M. PROKOP	M. PROKOP	APR 2009	AOT-RFE
PROJ. ENGR.	M. PROKOP	M. PROKOP	APR 2009	AOT-RFE
APPROVED				
RELEASED				

CLASSIFICATION OF: DRAWING: U
PART: U DRAWING: U

TITLE
(P-25)
FVTX
ROC PROTOTYPE
SERDES AND FO XMTR
FPGA B

TOLERANCE (UNLESS OTHERWISE NOTED)
X.X± ± — 0.XX± ± — ANGULAR ± —
0.X± ± — 0.XXX± ± — FINISH ± —

SCALE	NO. SHEETS	DRAWING NO.	SIZE	SHEET NO.
N/A	1	126Y-267898	D	26

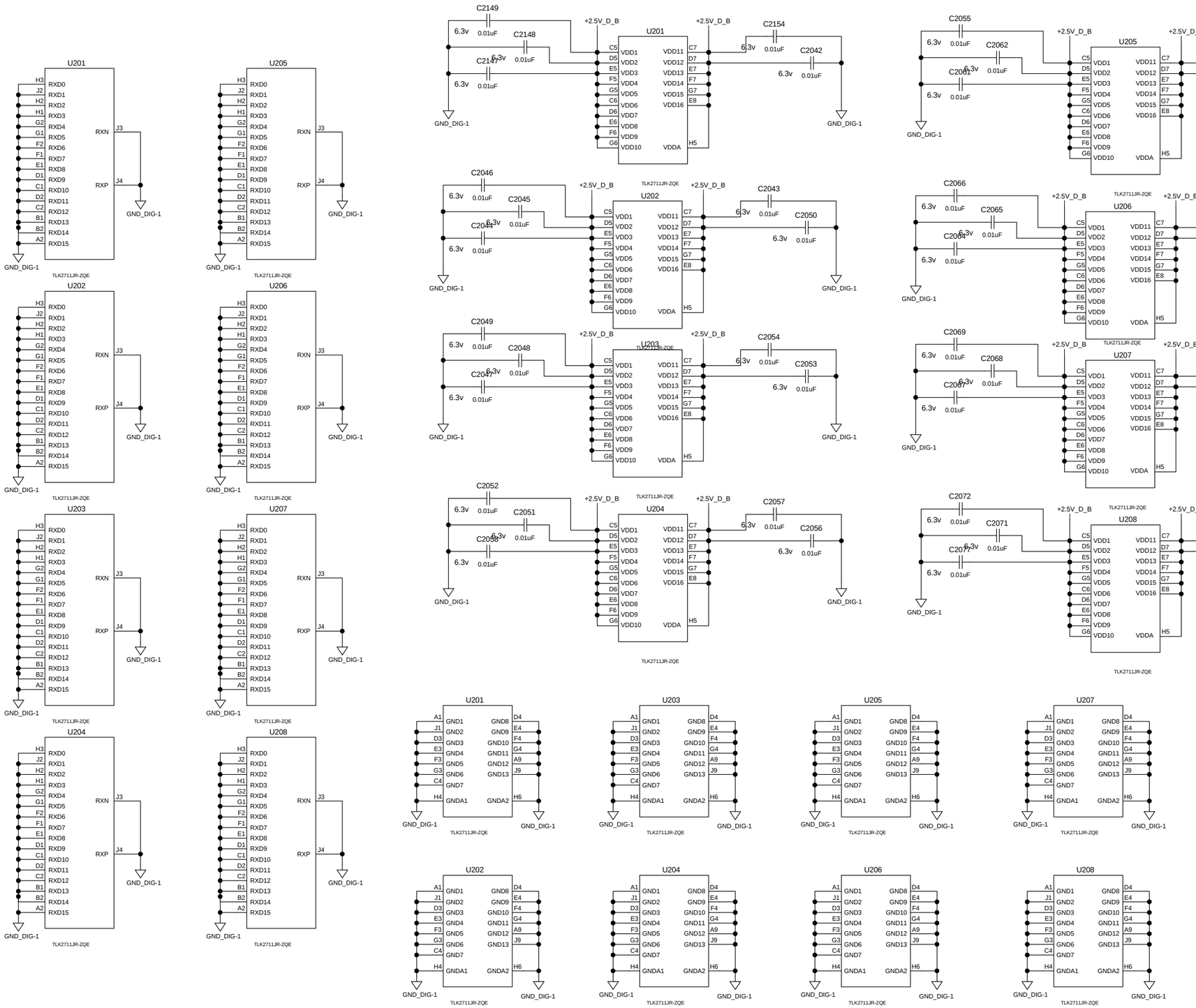

AS OF 10/05/2010 @ 12:50PM

REVISION LETTER	CLASS REVIEW	REVISIONS	DATE	CHANGE BY	CHECK BY	APPROVED BY
—		ORIGINAL ISSUE	—	—	—	—

LOS ALAMOS

LOS ALAMOS NATIONAL LABORATORY
LOS ALAMOS, NEW MEXICO 87545

MENTOR 2005

	NAME	SIGNATURE	DATE	GROUP
ORIGINATED				
DESIGNED				
DRAWN	S. CHACON	S. CHACON	APR 2009	AOT-IC
CHECKED	M. PROKOP	M. PROKOP	APR 2009	AOT-RFE
PROJ. ENGR.	M. PROKOP	M. PROKOP	APR 2009	AOT-RFE
APPROVED				
RELEASED				

CLASSIFICATION OF: DRAWING: U
PART: U DRAWING: U

TITLE
(P-25)
FVTX
ROC PROTOTYPE

SERDES AND FO TX PWR
FPGA B

TOLERANCE (UNLESS OTHERWISE NOTED)
X.X± ± — 0.XX± ± — ANGULAR ± —
0.X± ± — 0.XXX± ± — FINISH ± —

SCALE	NO. SHEETS	DRAWING NO.	SIZE	SHEET NO.
N/A	1	126Y-267898	D	27

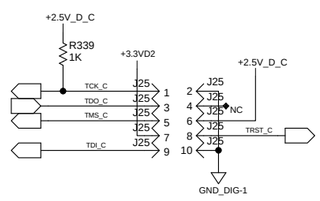

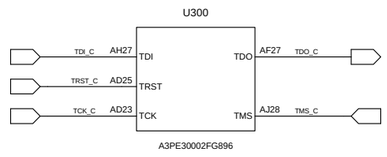

AS OF 10/05/2010 @ 12:50PM

REVISION LETTER	CLASS REVIEW	REVISIONS	DATE	CHANGE BY	CHECK BY	APPROVED BY
—		ORIGINAL ISSUE	—	—	—	—

LOS ALAMOS

LOS ALAMOS NATIONAL LABORATORY
LOS ALAMOS, NEW MEXICO 87545

MENTOR 2005

	NAME	SIGNATURE	DATE	GROUP
ORIGINATED				
DESIGNED				
DRAWN	S. CHACON	S. CHACON	APR 2009	AOT-IC
CHECKED	M. PROKOP	M. PROKOP	APR 2009	AOT-RFE
PROJ. ENGR.	M. PROKOP	M. PROKOP	APR 2009	AOT-RFE
APPROVED				
RELEASED				

CLASSIFICATION OF: DRAWING: U
PART: U DRAWING: U

TITLE

(P-25)

FVTX
ROC PROTOTYPE
FPGA C

TOLERANCE (UNLESS OTHERWISE NOTED)
X= ± — 0.XX= ± — ANGULAR ± —
0.X= ± — 0.XXX= ± — FINISH ± —

SCALE	NO. SHEETS	DRAWING NO.	SIZE	SHEET NO.
N/A	1	126Y-267898	D	28

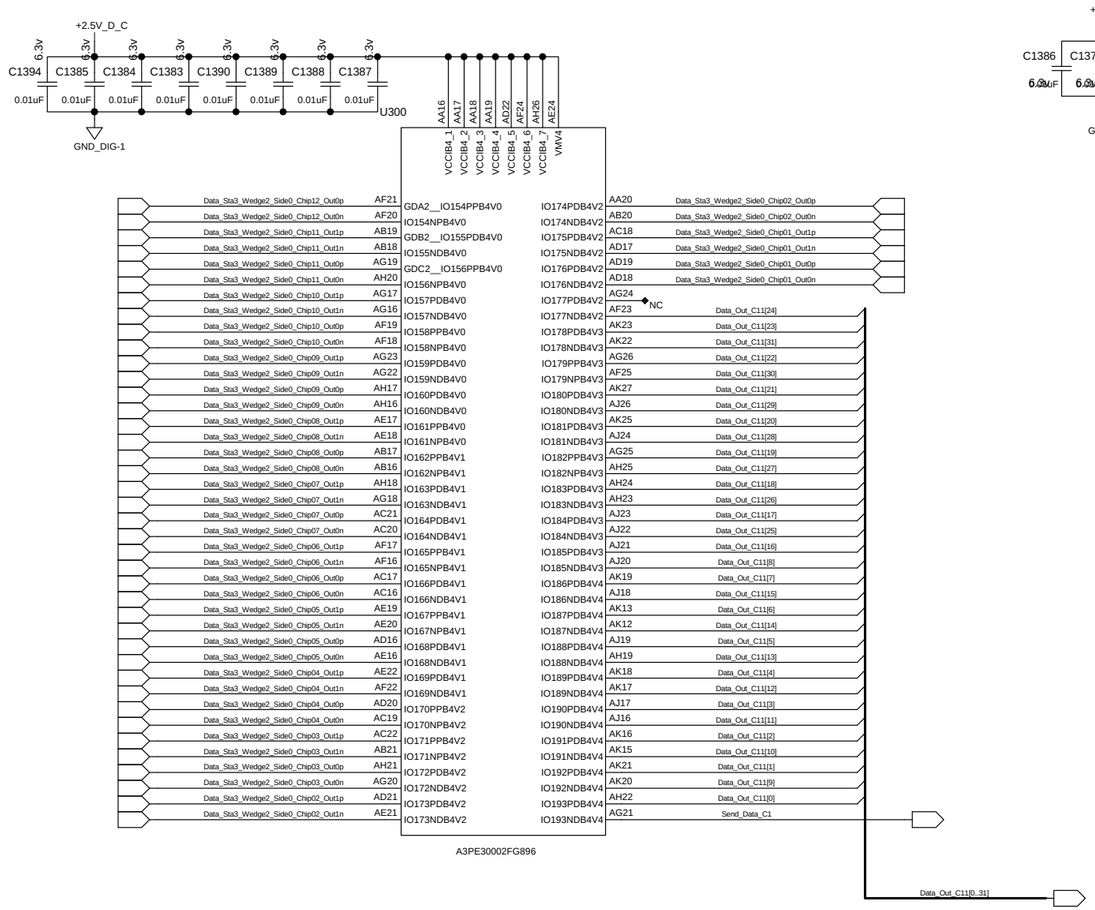

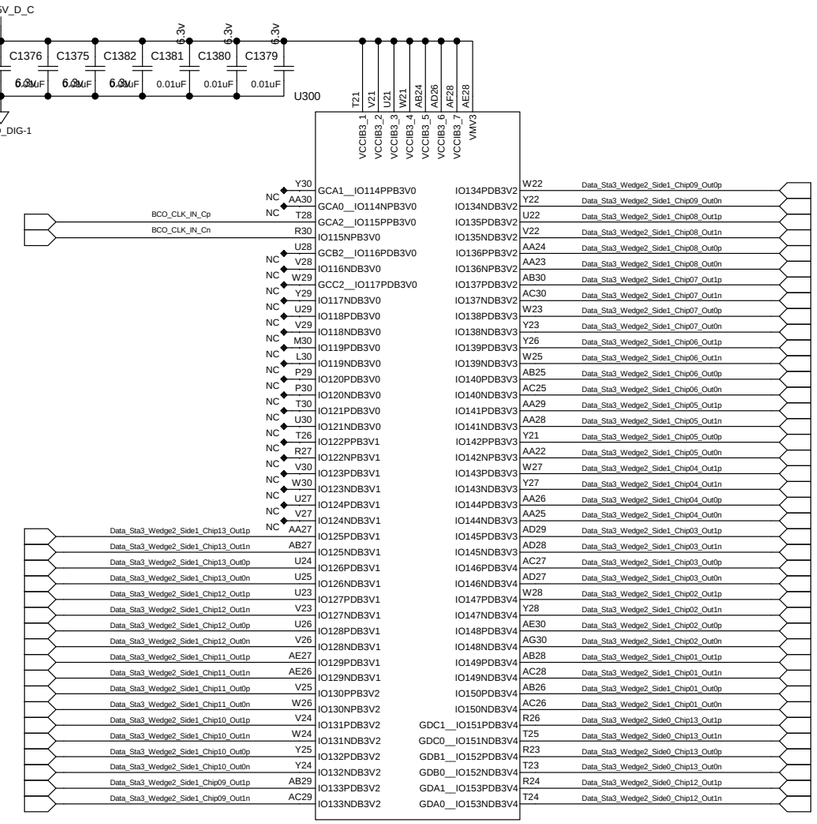

AS OF 10/05/2010 @ 12:50PM

REVISION LETTER	CLASS REVIEW	REVISIONS	DATE	CHANGE BY	CHECK BY	APPROVED BY
—		ORIGINAL ISSUE	—	—	—	—

LOS ALAMOS

LOS ALAMOS NATIONAL LABORATORY
LOS ALAMOS, NEW MEXICO 87545

MENTOR 2005

	NAME	SIGNATURE	DATE	GROUP
ORIGINATED				
DESIGNED				
DRAWN	S. CHACON	S. CHACON	APR 2009	AOT-IC
CHECKED	M. PROKOP	M. PROKOP	APR 2009	AOT-RFE
PROJ. ENGR.	M. PROKOP	M. PROKOP	APR 2009	AOT-RFE
APPROVED				
RELEASED				

CLASSIFICATION OF DRAWING: U
PART: U DRAWING: U

TITLE
(P-25)
FVTX
ROC PROTOTYPE
FPGA C

TOLERANCE (UNLESS OTHERWISE NOTED)
X= ± 0.X= ± 0.XX= ± 0.XXX= ± ANGULAR ± FINISH ±

SCALE	NO. SHEETS	DRAWING NO.	SIZE	SHEET NO.
N/A	1	126Y-267898	D	29

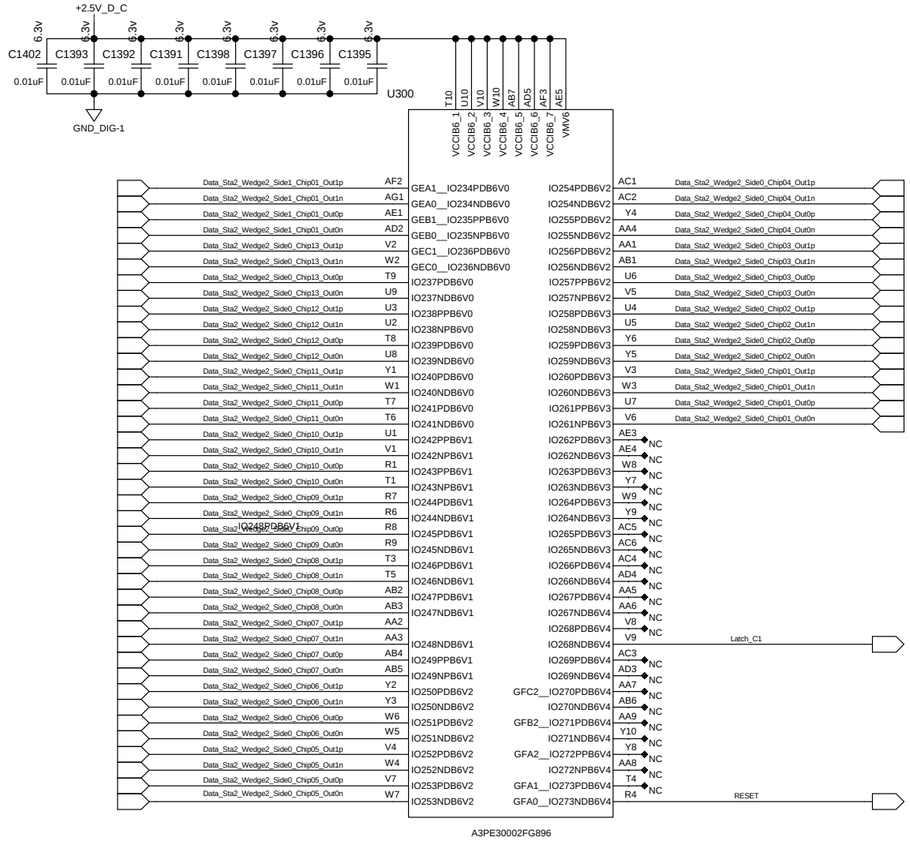

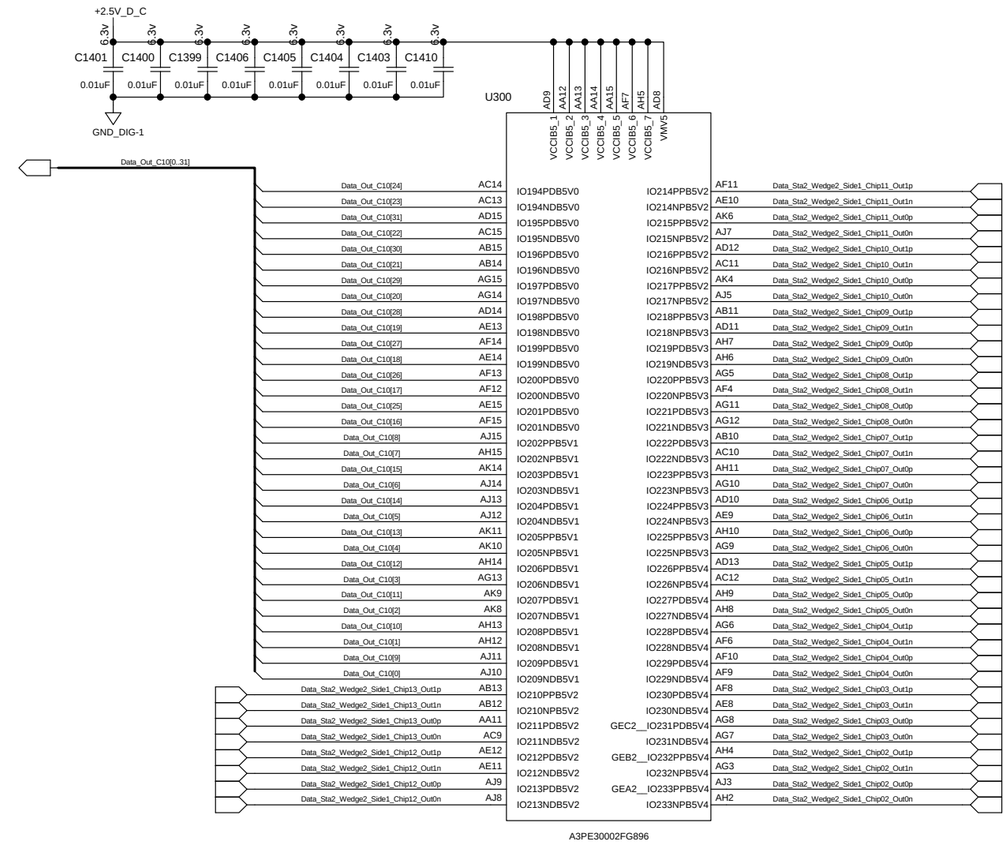

AS OF 10/05/2010 @ 12:50PM

REVISION LETTER	CLASS REVIEW	REVISIONS	DATE	CHANGE BY	CHECK BY	APPROVED BY
—		ORIGINAL ISSUE	—	—	—	—

LOS ALAMOS

LOS ALAMOS NATIONAL LABORATORY
LOS ALAMOS, NEW MEXICO 87545

MENTOR 2005

	NAME	SIGNATURE	DATE	GROUP
ORIGINATED				
DESIGNED				
DRAWN	S. CHACON	S. CHACON	APR 2009	AOT-IC
CHECKED	M. PROKOP	M. PROKOP	APR 2009	AOT-RFE
PROJ. ENGR.	M. PROKOP	M. PROKOP	APR 2009	AOT-RFE
APPROVED				
RELEASED				

CLASSIFICATION OF: DRAWING: U
PART: U DRAWING: U

TITLE

(P-25)

FVTX
ROC PROTOTYPE
FPGA C

TOLERANCE (UNLESS OTHERWISE NOTED)
X= ± — 0.XX= ± — ANGULAR ± —
0.X= ± — 0.XXX= ± — FINISH ± —

SCALE	NO. SHEETS	DRAWING NO.	SIZE	SHEET NO.
N/A	1	126Y-267898	D	30

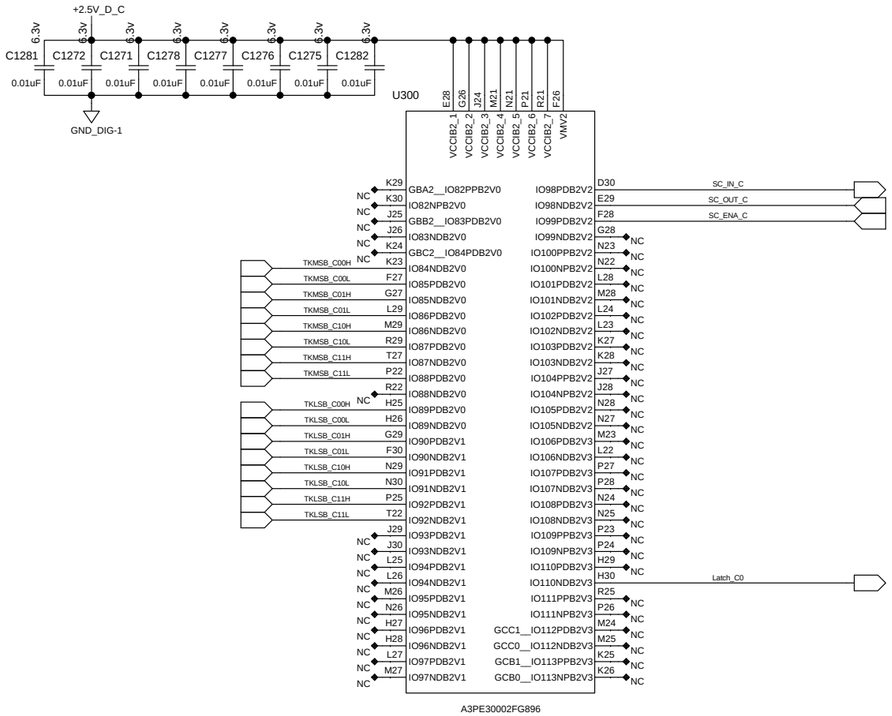

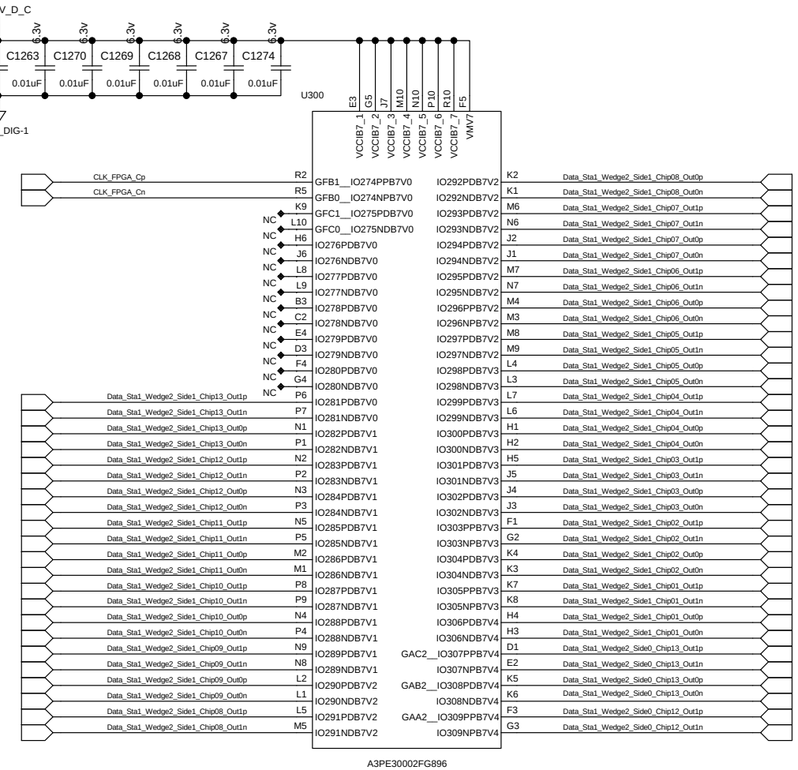

REVISION LETTER	CLASS REVIEW	REVISIONS	DATE	CHANGE BY	CHECK BY	APPROVED BY
—		ORIGINAL ISSUE	—	—	—	—

LOS ALAMOS

LOS ALAMOS NATIONAL LABORATORY
LOS ALAMOS, NEW MEXICO 87545

MENTOR 2005

	NAME	SIGNATURE	DATE	GROUP
ORIGINATED				
DESIGNED				
DRAWN	S. CHACON	S. CHACON	APR 2009	AOT-IC
CHECKED	M. PROKOP	M. PROKOP	APR 2009	AOT-RFE
PROJ. ENGR.	M. PROKOP	M. PROKOP	APR 2009	AOT-RFE
APPROVED				
RELEASED				

CLASSIFICATION OF DRAWING: U
PART: U DRAWING: U

TITLE

(P-25)

FVTX
ROC PROTOTYPE
FPGA C

TOLERANCE (UNLESS OTHERWISE NOTED)
X= ± ——— 0.XX= ± ——— ANGULAR ± ———
0.X= ± ——— 0.XXX= ± ——— FINISH ± ———

SCALE	NO. SHEETS	DRAWING NO.	SIZE	SHEET NO.
N/A	1	126Y-267898	D	31

AS OF 10/05/2010 @ 12:50PM

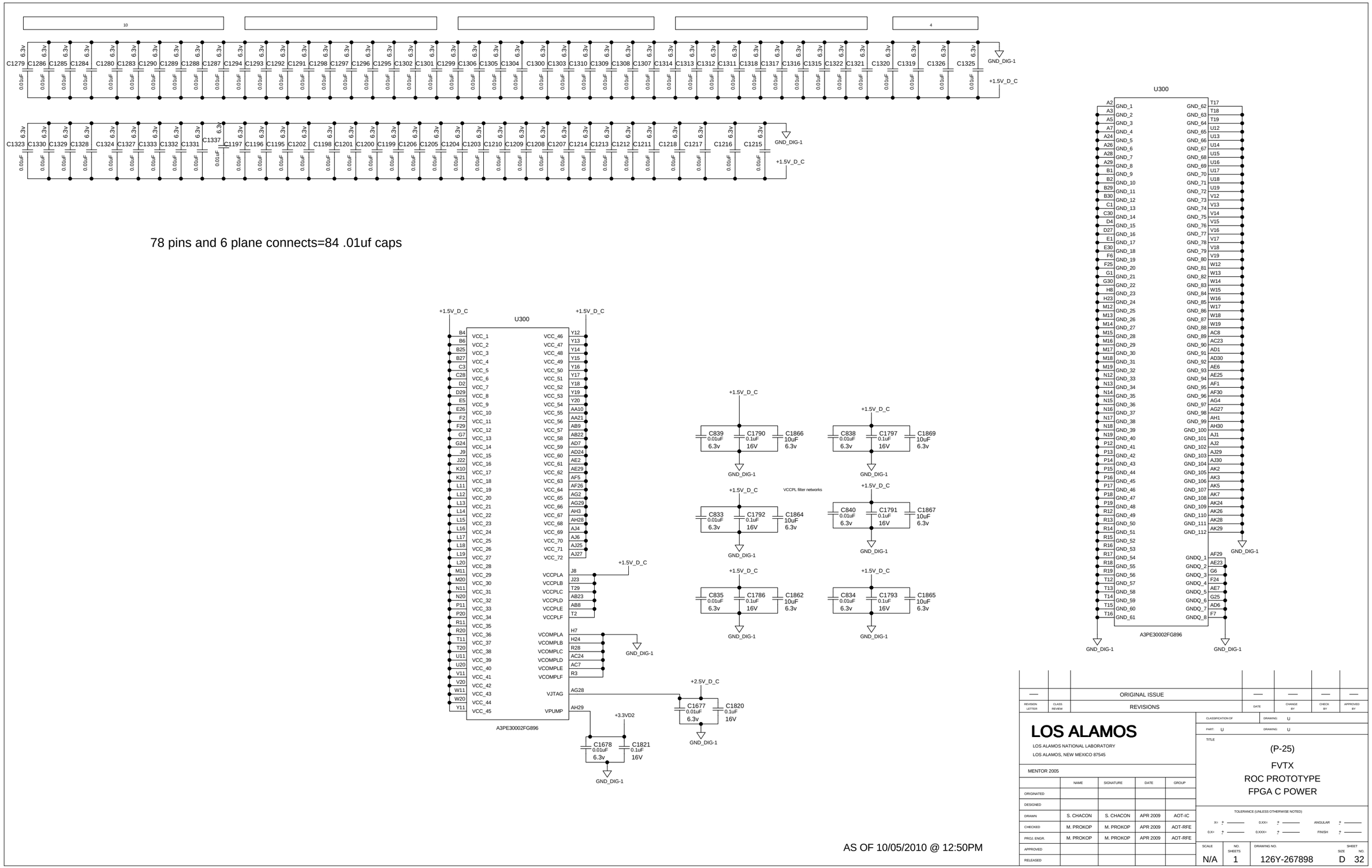
78 pins and 6 plane connects=84 .01uf caps
U300
A3PE30002FG896
+1.5V_D_C
+2.5V_D_C
+3.3VD2
GND_DIG-1
VCCPL filter networks
VCCPLA
VCCPLB
VCCPLC
VCCPLD
VCCPLE
VCCPLF
VCOMPLA
VCOMPLB
VCOMPLC
VCOMPLD
VCOMPLE
VCOMPLF
VJTAG
VPUMP
ORIGINAL ISSUE
REVISIONS
LOS ALAMOS
LOS ALAMOS NATIONAL LABORATORY
LOS ALAMOS, NEW MEXICO 87545
MENTOR 2005
(P-25)
FVTX
ROC PROTOTYPE
FPGA C POWER
S. CHACON
S. CHACON
APR 2009
AOT-IC
M. PROKOP
M. PROKOP
APR 2009
AOT-RFE
M. PROKOP
M. PROKOP
APR 2009
AOT-RFE
N/A
1
126Y-267898
D
32
AS OF 10/05/2010 @ 12:50PM

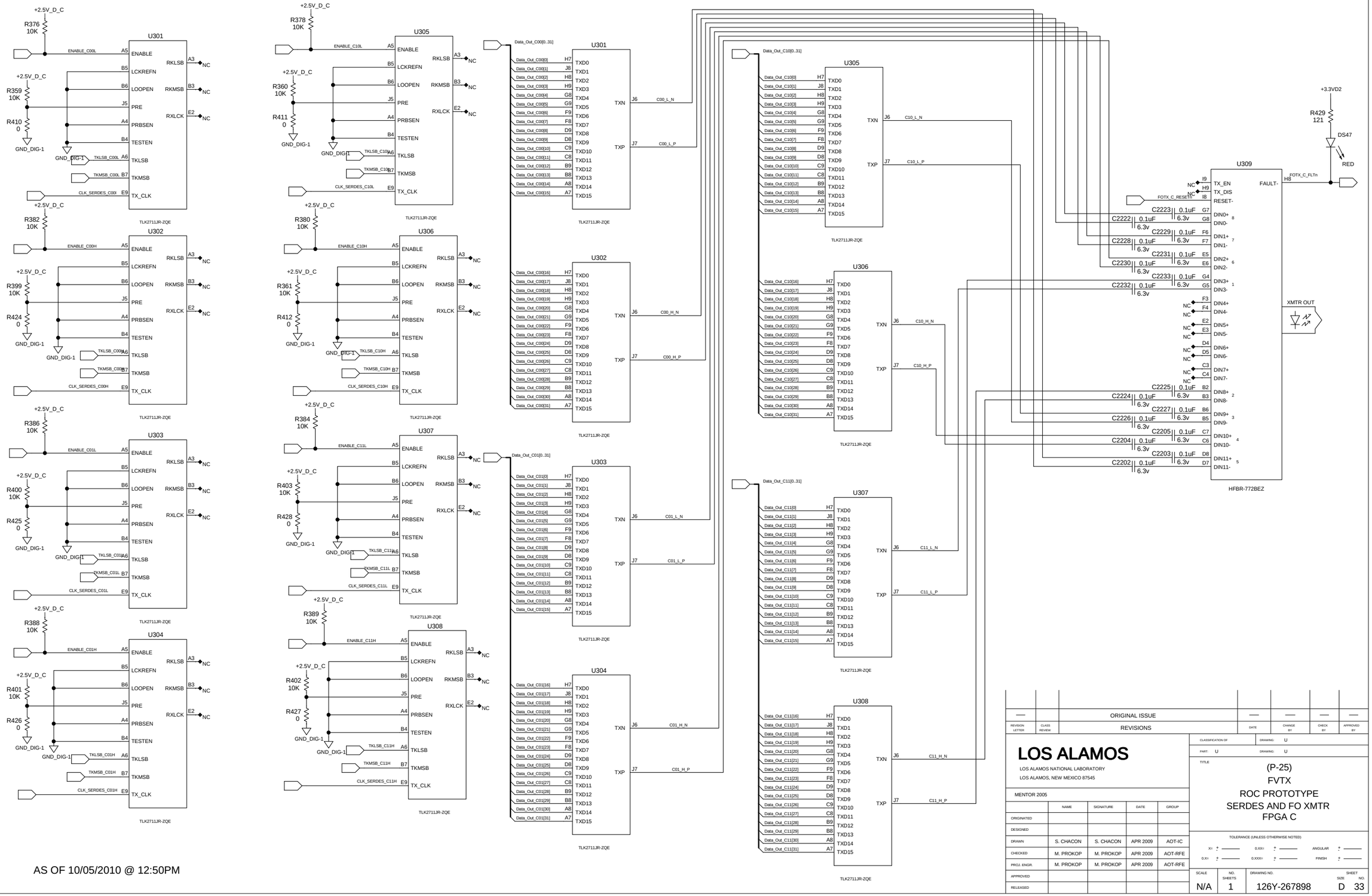

REVISION LETTER	CLASS REVIEW	REVISIONS	DATE	CHANGE BY	CHECK BY	APPROVED BY
—		ORIGINAL ISSUE	—	—	—	—

LOS ALAMOS

LOS ALAMOS NATIONAL LABORATORY
LOS ALAMOS, NEW MEXICO 87545

MENTOR 2005

	NAME	SIGNATURE	DATE	GROUP
ORIGINATED				
DESIGNED				
DRAWN	S. CHACON	S. CHACON	APR 2009	AOT-IC
CHECKED	M. PROKOP	M. PROKOP	APR 2009	AOT-RFE
PROJ. ENGR.	M. PROKOP	M. PROKOP	APR 2009	AOT-RFE
APPROVED				
RELEASED				

CLASSIFICATION OF: U
PART: U
DRAWING: U
DRAWING: U

TITLE
(P-25)
FVTX
ROC PROTOTYPE
SERDES AND FO XMTR
FPGA C

TOLERANCE (UNLESS OTHERWISE NOTED)
X.X± — 0.XX± — ANGULAR ±
0.X± — 0.XXX± — FINISH ±

SCALE	NO. SHEETS	DRAWING NO.	SIZE	SHEET NO.
N/A	1	126Y-267898	D	33

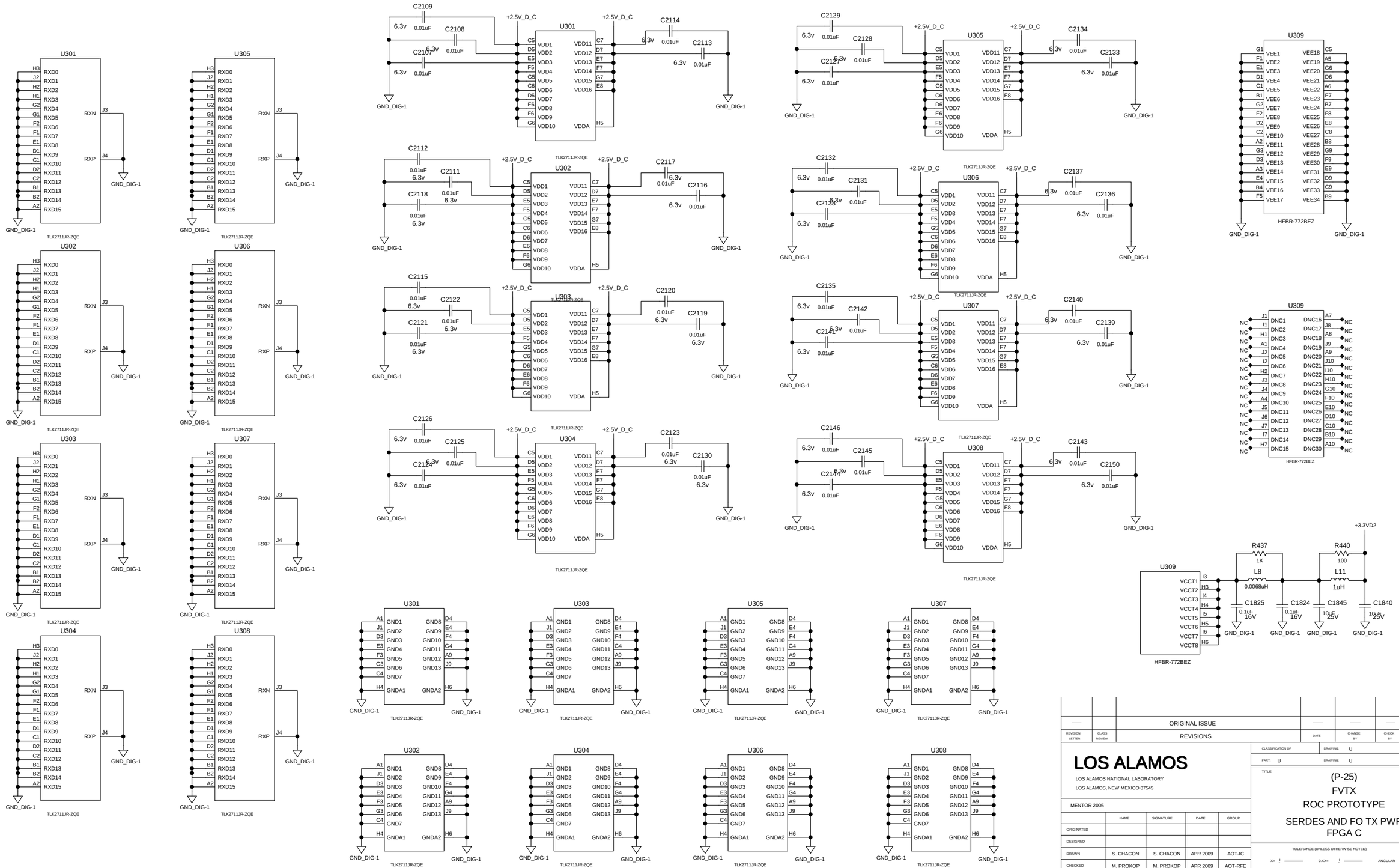

REVISION LETTER	CLASS REVIEW	REVISIONS	DATE	CHANGE BY	CHECK BY	APPROVED BY
—		ORIGINAL ISSUE	—	—	—	—

LOS ALAMOS

LOS ALAMOS NATIONAL LABORATORY
LOS ALAMOS, NEW MEXICO 87545

MENTOR 2005

	NAME	SIGNATURE	DATE	GROUP
ORIGINATED				
DESIGNED				
DRAWN	S. CHACON	S. CHACON	APR 2009	AOT-IC
CHECKED	M. PROKOP	M. PROKOP	APR 2009	AOT-RFE
PROJ. ENGR.	M. PROKOP	M. PROKOP	APR 2009	AOT-RFE
APPROVED				
RELEASED				

CLASSIFICATION OF: DRAWING: U
PART: U DRAWING: U

TITLE
(P-25)
FVTX
ROC PROTOTYPE
SERDES AND FO TX PWR
FPGA C

TOLERANCE (UNLESS OTHERWISE NOTED)
X.= ± — 0.XX= ± — ANGULAR ± —
0.X= ± — 0.XXX= ± — FINISH ± —

SCALE	NO. SHEETS	DRAWING NO.	SIZE	SHEET NO.
N/A	1	126Y-267898	D	34

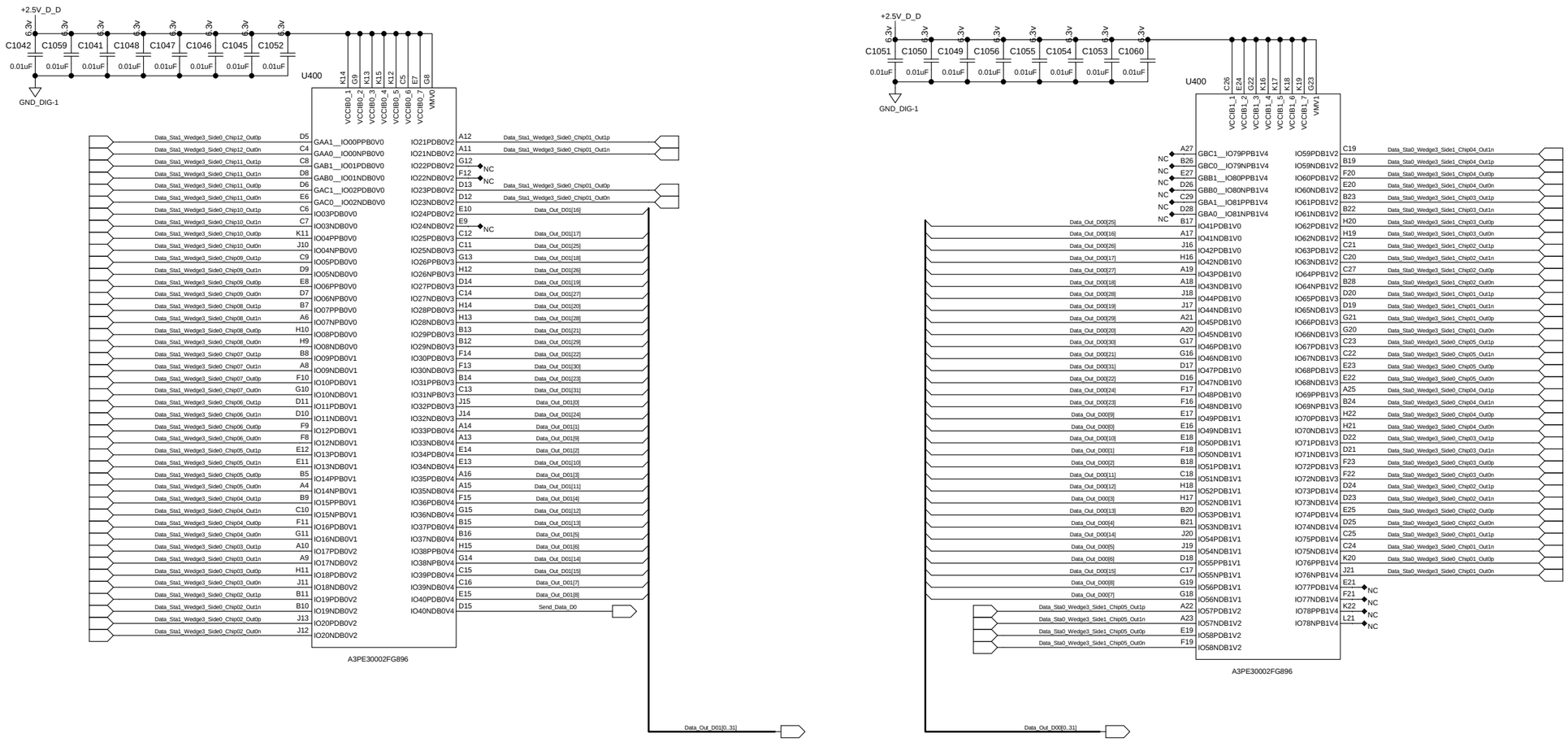

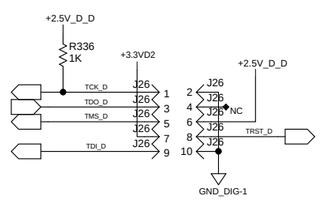

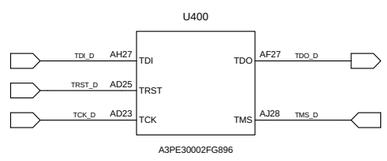

AS OF 10/05/2010 @ 12:50PM

REVISION LETTER	CLASS REVIEW	REVISIONS	DATE	CHANGE BY	CHECK BY	APPROVED BY
—		ORIGINAL ISSUE	—	—	—	—

LOS ALAMOS

LOS ALAMOS NATIONAL LABORATORY
LOS ALAMOS, NEW MEXICO 87545

MENTOR 2005

	NAME	SIGNATURE	DATE	GROUP
ORIGINATED				
DESIGNED				
DRAWN	S. CHACON	S. CHACON	APR 2009	AOT-IC
CHECKED	M. PROKOP	M. PROKOP	APR 2009	AOT-RFE
PROJ. ENGR.	M. PROKOP	M. PROKOP	APR 2009	AOT-RFE
APPROVED				
RELEASED				

CLASSIFICATION OF: DRAWING: U
PART: U DRAWING: U

TITLE

(P-25)

FVTX
ROC PROTOTYPE
FPGA D

TOLERANCE (UNLESS OTHERWISE NOTED)
X.X± ± — 0.XX± ± — ANGULAR ± —
0.X± ± — 0.XXX± ± — FINISH ± —

SCALE	NO. SHEETS	DRAWING NO.	SIZE	SHEET NO.
N/A	1	126Y-267898	D	35

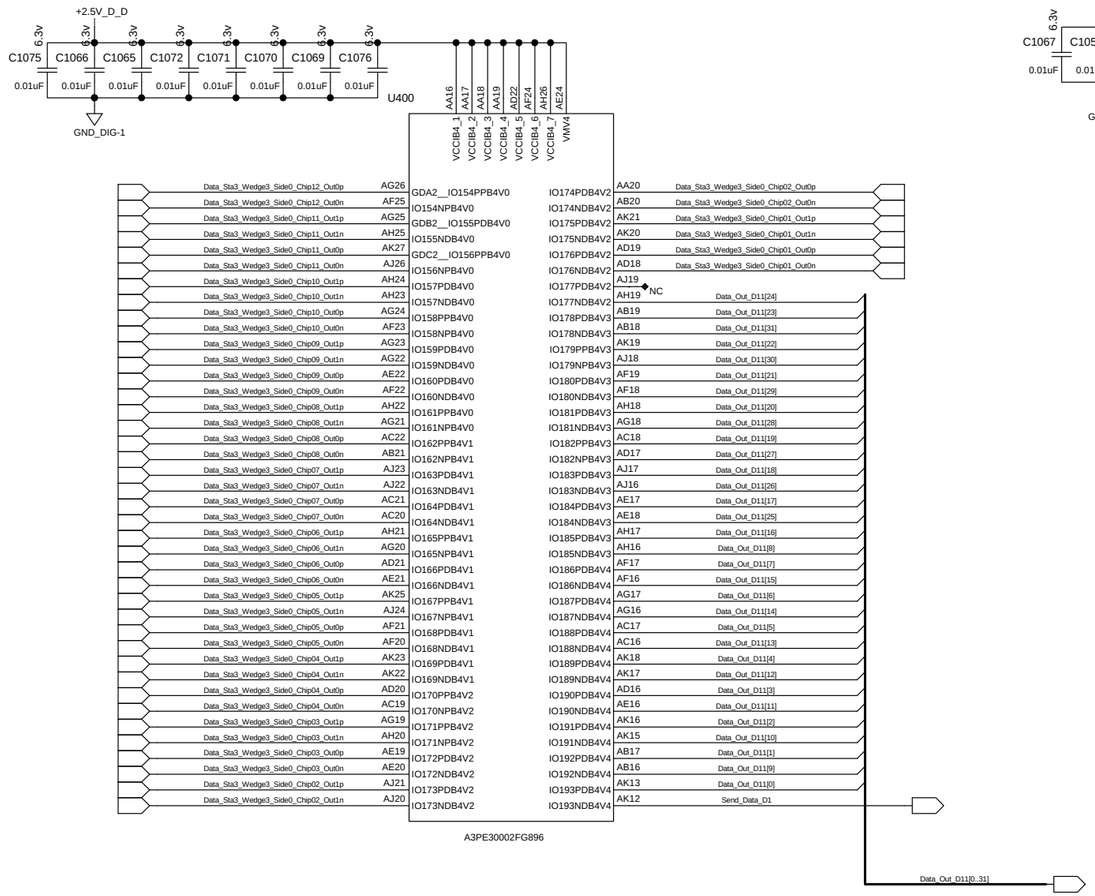

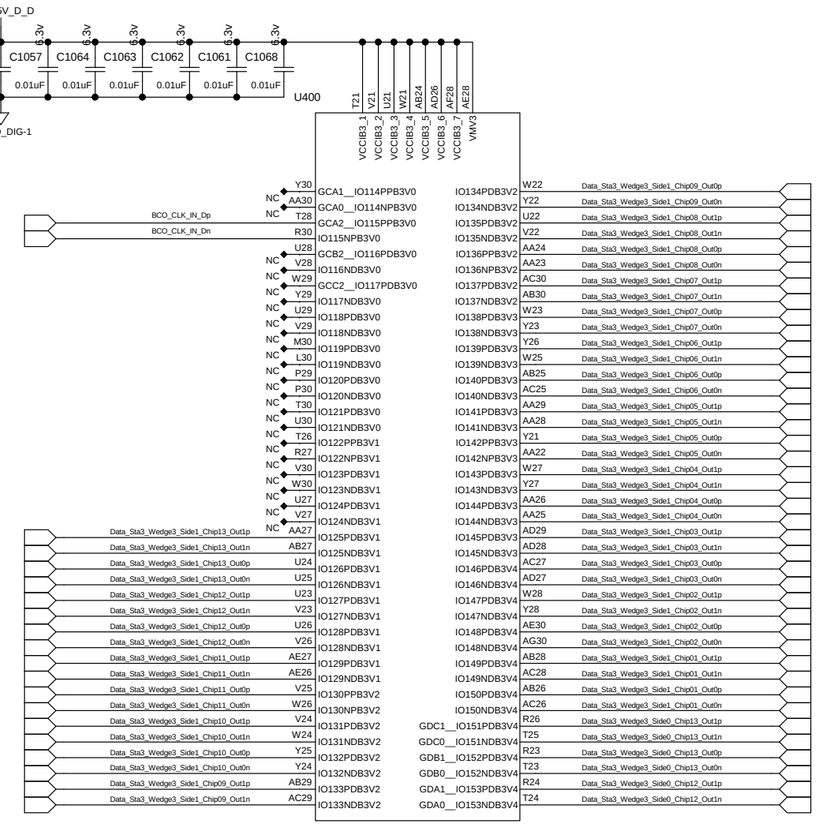

AS OF 10/05/2010 @ 12:50PM

REVISION LETTER	CLASS REVIEW	REVISIONS	DATE	CHANGE BY	CHECK BY	APPROVED BY
—		ORIGINAL ISSUE	—	—	—	—

LOS ALAMOS

LOS ALAMOS NATIONAL LABORATORY
LOS ALAMOS, NEW MEXICO 87545

MENTOR 2005

	NAME	SIGNATURE	DATE	GROUP
ORIGINATED				
DESIGNED				
DRAWN	S. CHACON	S. CHACON	APR 2009	AOT-IC
CHECKED	M. PROKOP	M. PROKOP	APR 2009	AOT-RFE
PROJ. ENGR.	M. PROKOP	M. PROKOP	APR 2009	AOT-RFE
APPROVED				
RELEASED				

CLASSIFICATION OF DRAWING: U
PART: U DRAWING: U

TITLE
(P-25)
FVTX
ROC PROTOTYPE
FPGA D

TOLERANCE (UNLESS OTHERWISE NOTED)
X= ± 0.X= ± 0.XX= ± 0.XXX= ± ANGULAR ± FINISH ±

SCALE	NO. SHEETS	DRAWING NO.	SIZE	SHEET NO.
N/A	1	126Y-267898	D	36

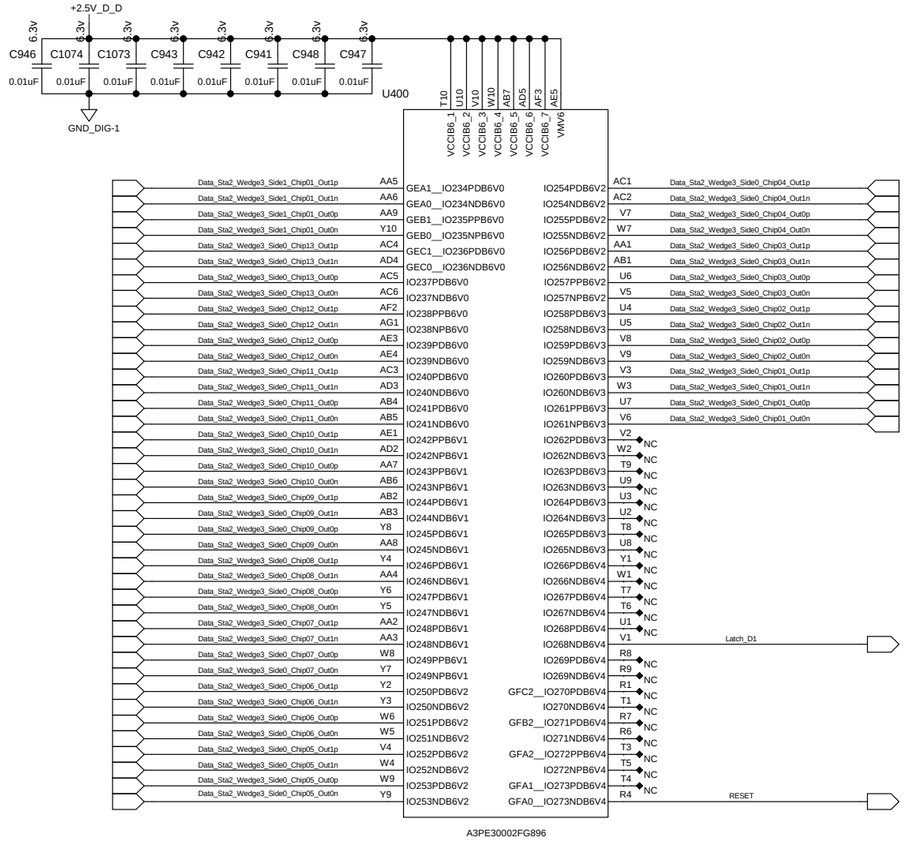

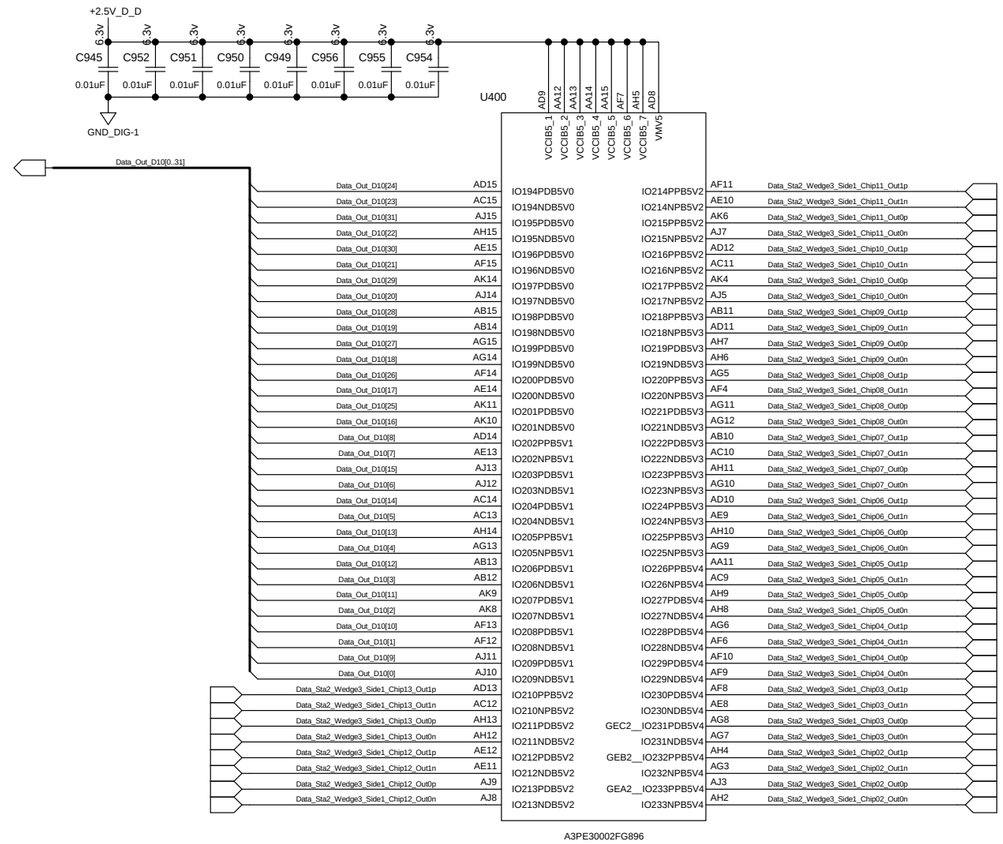

AS OF 10/05/2010 @ 12:50PM

REVISION LETTER	CLASS REVIEW	REVISIONS	DATE	CHANGE BY	CHECK BY	APPROVED BY
—		ORIGINAL ISSUE	—	—	—	—

LOS ALAMOS

LOS ALAMOS NATIONAL LABORATORY
LOS ALAMOS, NEW MEXICO 87545

MENTOR 2005

	NAME	SIGNATURE	DATE	GROUP
ORIGINATED				
DESIGNED				
DRAWN	S. CHACON	S. CHACON	APR 2009	AOT-IC
CHECKED	M. PROKOP	M. PROKOP	APR 2009	AOT-RFE
PROJ. ENGR.	M. PROKOP	M. PROKOP	APR 2009	AOT-RFE
APPROVED				
RELEASED				

CLASSIFICATION OF: DRAWING: U
PART: U DRAWING: U

TITLE
(P-25)
FVTX
ROC PROTOTYPE
FPGA D

TOLERANCE (UNLESS OTHERWISE NOTED)
X= ± 0.XX= ± ANGULAR ±
0.X= ± 0.XXX= ± FINISH ±

SCALE	NO. SHEETS	DRAWING NO.	SIZE	SHEET NO.
N/A	1	126Y-267898	D	37

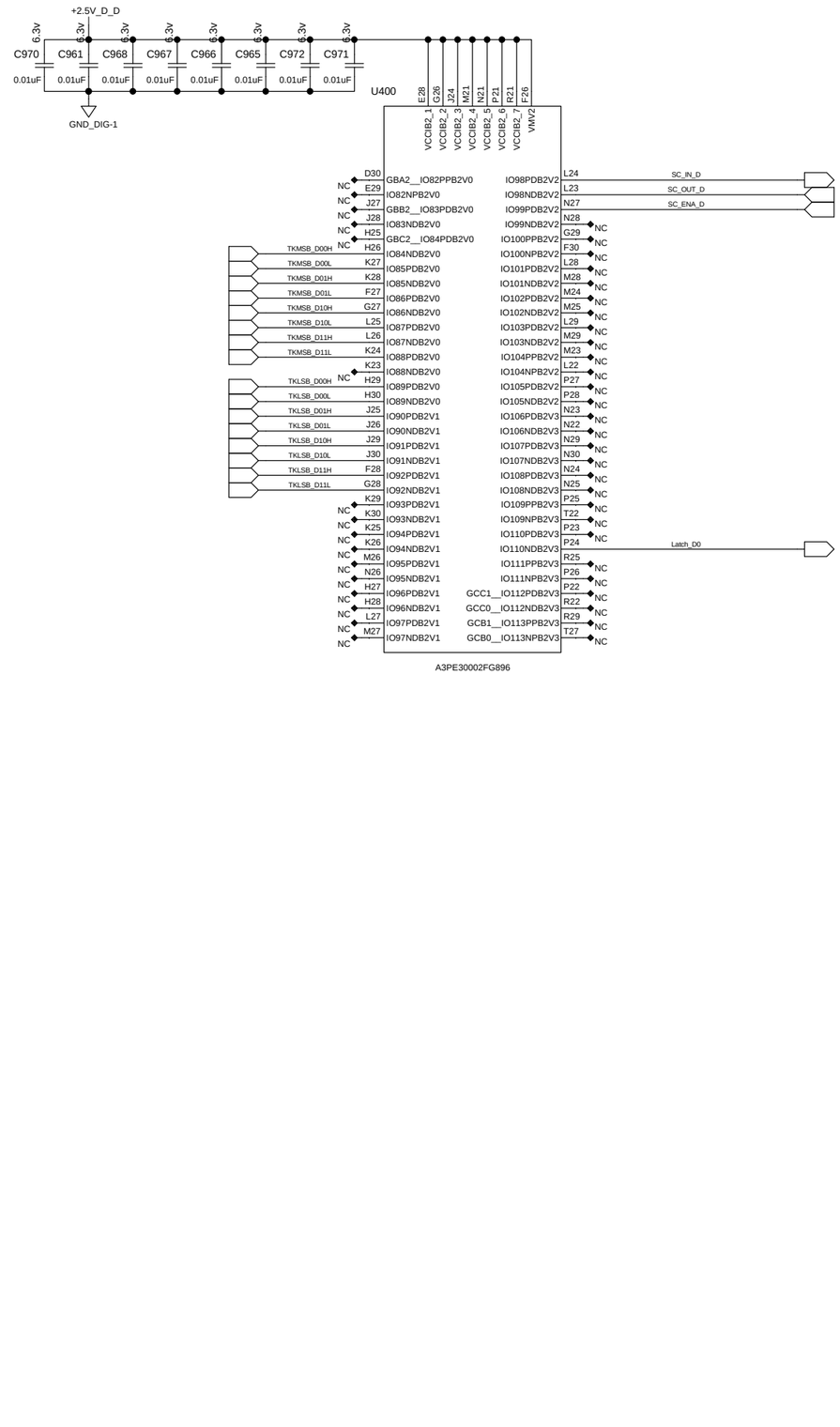

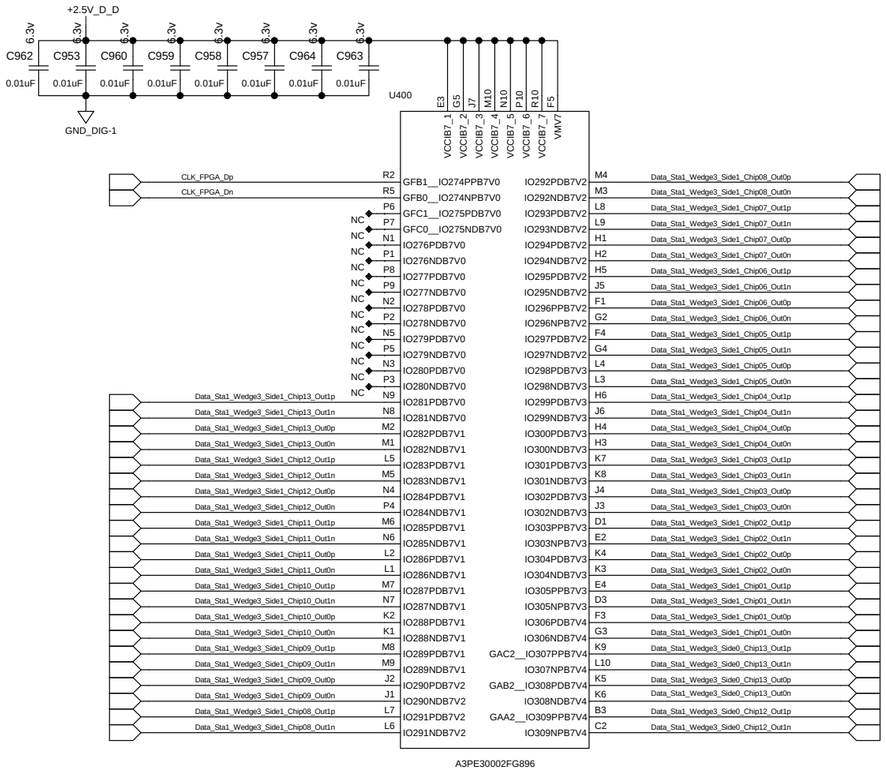

AS OF 10/05/2010 @ 12:50PM

REVISION LETTER	CLASS REVIEW	REVISIONS	DATE	CHANGE BY	CHECK BY	APPROVED BY
—		ORIGINAL ISSUE	—	—	—	—

LOS ALAMOS

LOS ALAMOS NATIONAL LABORATORY
LOS ALAMOS, NEW MEXICO 87545

MENTOR 2005

	NAME	SIGNATURE	DATE	GROUP
ORIGINATED				
DESIGNED				
DRAWN	S. CHACON	S. CHACON	APR 2009	AOT-IC
CHECKED	M. PROKOP	M. PROKOP	APR 2009	AOT-RFE
PROJ. ENGR.	M. PROKOP	M. PROKOP	APR 2009	AOT-RFE
APPROVED				
RELEASED				

CLASSIFICATION OF DRAWING: U
PART: U DRAWING: U

TITLE

(P-25)

FVTX
ROC PROTOTYPE
FPGA D

TOLERANCE (UNLESS OTHERWISE NOTED)
X= ± ——— 0.XX= ± ——— ANGULAR ± ———
0.X= ± ——— 0.XXX= ± ——— FINISH ± ———

SCALE	NO. SHEETS	DRAWING NO.	SIZE	SHEET NO.
N/A	1	126Y-267898	D	38

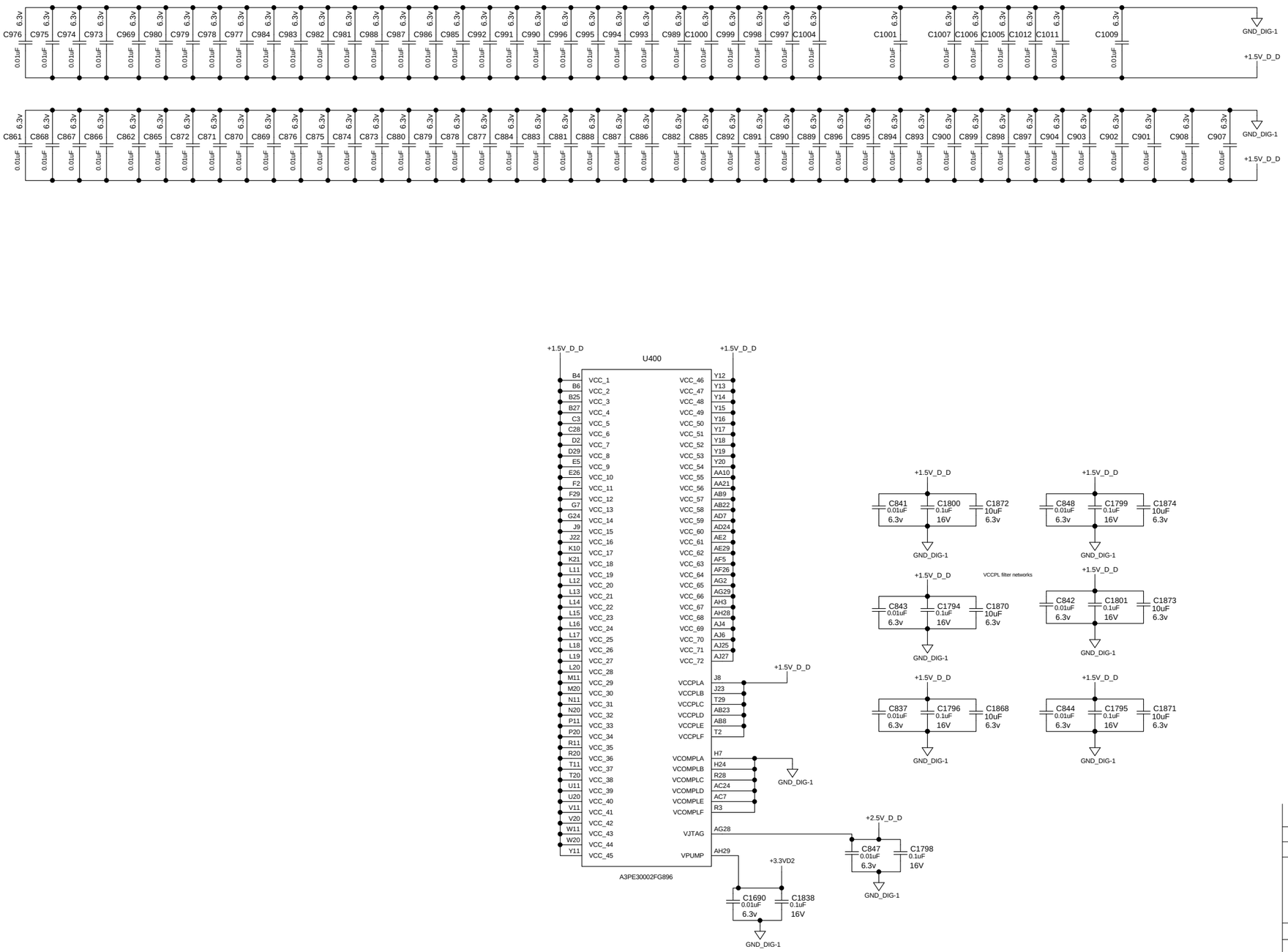

AS OF 10/05/2010 @ 12:50PM

REVISION LETTER	CLASS REVIEW	REVISIONS	DATE	CHANGE BY	CHECK BY	APPROVED BY
—		ORIGINAL ISSUE	—	—	—	—

LOS ALAMOS

LOS ALAMOS NATIONAL LABORATORY
LOS ALAMOS, NEW MEXICO 87545

MENTOR 2005

	NAME	SIGNATURE	DATE	GROUP
ORIGINATED				
DESIGNED				
DRAWN:	S. CHACON	S. CHACON	APR 2009	AOT-IC
CHECKED	M. PROKOP	M. PROKOP	APR 2009	AOT-RFE
PROJ. ENGR.	M. PROKOP	M. PROKOP	APR 2009	AOT-RFE
APPROVED				
RELEASED				

CLASSIFICATION OF: DRAWING: U
PART: U DRAWING: U

TITLE

(P-25)

FVTX
ROC PROTOTYPE
FPGA D POWER

TOLERANCE (UNLESS OTHERWISE NOTED)
X.X± ± — 0.XX± ± — ANGULAR ± —
0.X± ± — 0.XXX± ± — FINISH ± —

SCALE	NO. SHEETS	DRAWING NO.	SIZE	SHEET NO.
N/A	1	126Y-267898	D	39

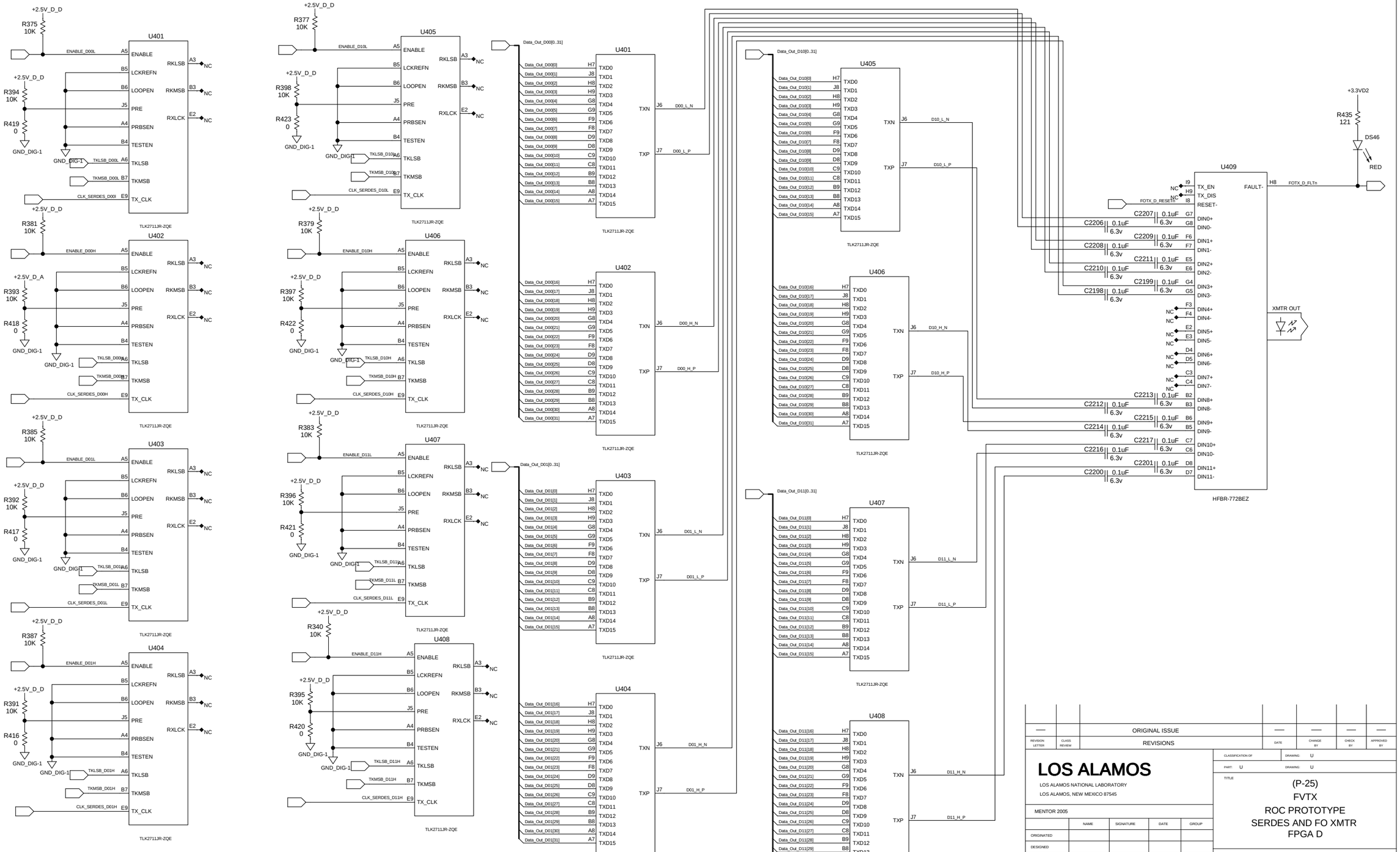

AS OF 10/05/2010 @ 12:50PM

REVISION LETTER	CLASS REVIEW	REVISIONS	DATE	CHANGE BY	CHECK BY	APPROVED BY
—		ORIGINAL ISSUE	—	—	—	—

LOS ALAMOS

LOS ALAMOS NATIONAL LABORATORY
LOS ALAMOS, NEW MEXICO 87545

MENTOR 2005

	NAME	SIGNATURE	DATE	GROUP
ORIGINATED				
DESIGNED				
DRAWN	S. CHACON	S. CHACON	APR 2009	AOT-IC
CHECKED	M. PROKOP	M. PROKOP	APR 2009	AOT-RFE
PROJ. ENGR.	M. PROKOP	M. PROKOP	APR 2009	AOT-RFE
APPROVED				
RELEASED				

CLASSIFICATION OF: DRAWING: U
PART: U DRAWING: U

TITLE
(P-25)
FVTX
ROC PROTOTYPE
SERDES AND FO XMTR
FPGA D

TOLERANCE (UNLESS OTHERWISE NOTED)
X.X± ± — 0.XX± ± — ANGULAR ± —
0.X± ± — 0.XXX± ± — FINISH ± —

SCALE	NO. SHEETS	DRAWING NO.	SIZE	SHEET NO.
N/A	1	126Y-267898	D	40

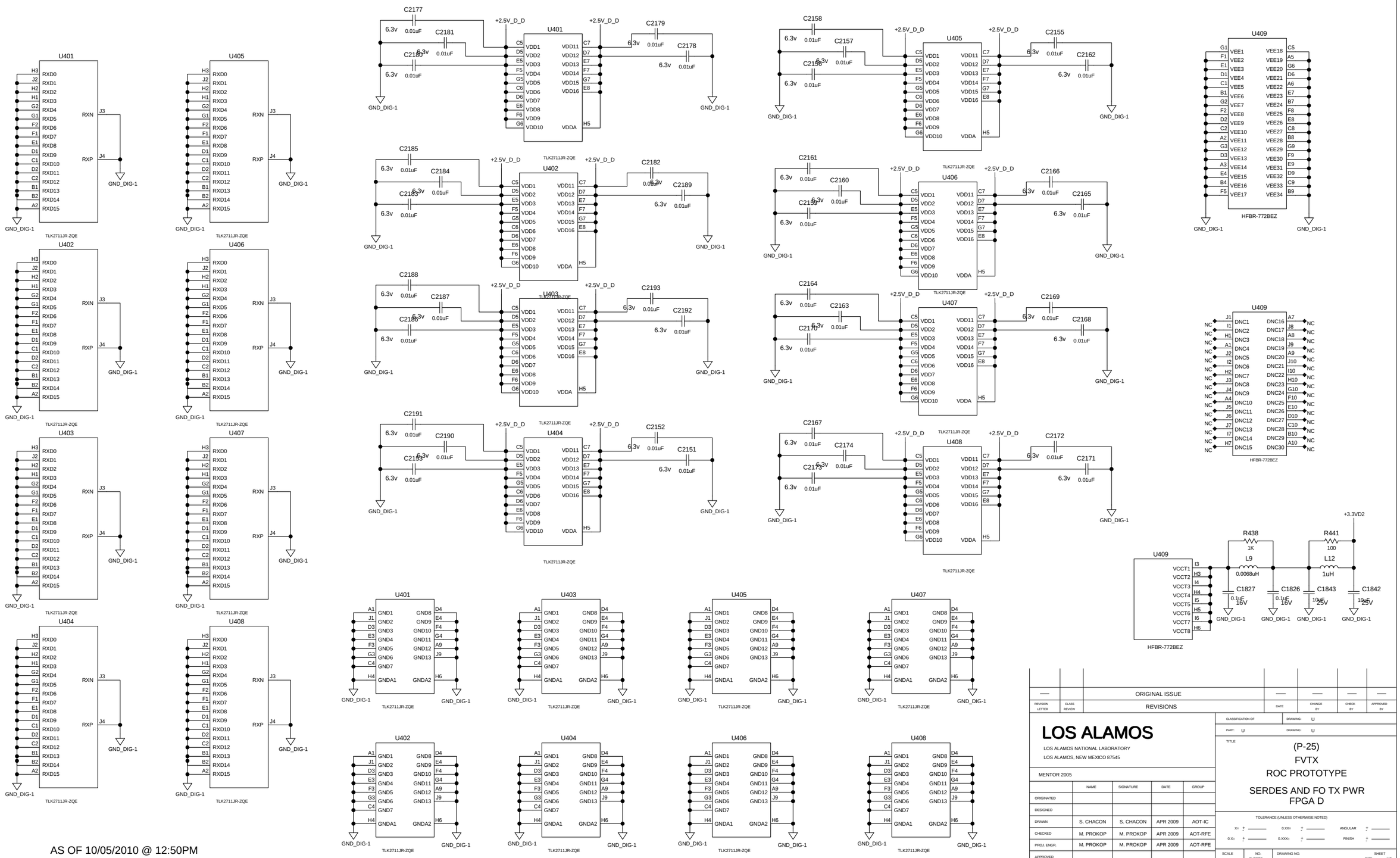

AS OF 10/05/2010 @ 12:50PM

REVISION LETTER	CLASS REVIEW	REVISIONS	DATE	CHANGE BY	CHECK BY	APPROVED BY
—		ORIGINAL ISSUE	—	—	—	—

LOS ALAMOS

LOS ALAMOS NATIONAL LABORATORY
LOS ALAMOS, NEW MEXICO 87545

MENTOR 2005

	NAME	SIGNATURE	DATE	GROUP
ORIGINATED				
DESIGNED				
DRAWN	S. CHACON	S. CHACON	APR 2009	AOT-IC
CHECKED	M. PROKOP	M. PROKOP	APR 2009	AOT-RFE
PROJ. ENGR.	M. PROKOP	M. PROKOP	APR 2009	AOT-RFE
APPROVED				
RELEASED				

CLASSIFICATION OF: DRAWING: U
PART: U DRAWING: U

TITLE
(P-25)
FVTX
ROC PROTOTYPE

SERDES AND FO TX PWR
FPGA D

TOLERANCE (UNLESS OTHERWISE NOTED)
X= ± ___ 0.XX= ± ___ ANGULAR ± ___
0.X= ± ___ 0.XXX= ± ___ FINISH ± ___

SCALE	NO. SHEETS	DRAWING NO.	SIZE	SHEET NO.
N/A	1	126Y-267898	D	41

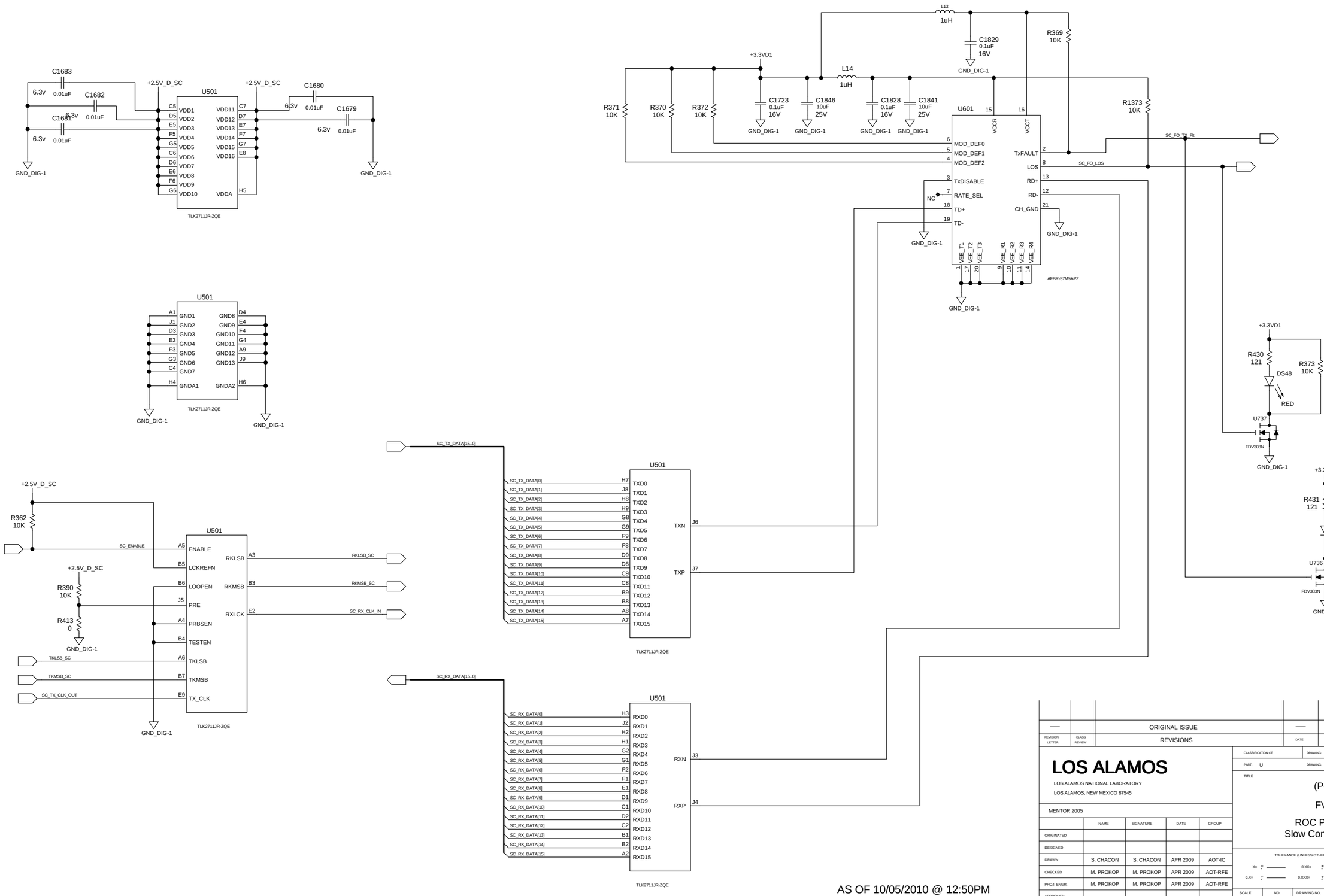

AS OF 10/05/2010 @ 12:50PM

REVISION LETTER	CLASS REVIEW	REVISIONS	DATE	CHANGE BY	CHECK BY	APPROVED BY
—		ORIGINAL ISSUE	—	—	—	—

LOS ALAMOS

LOS ALAMOS NATIONAL LABORATORY
LOS ALAMOS, NEW MEXICO 87545

MENTOR 2005

	NAME	SIGNATURE	DATE	GROUP
ORIGINATED				
DESIGNED				
DRAWN	S. CHACON	S. CHACON	APR 2009	AOT-IC
CHECKED	M. PROKOP	M. PROKOP	APR 2009	AOT-RFE
PROJ. ENGR.	M. PROKOP	M. PROKOP	APR 2009	AOT-RFE
APPROVED				
RELEASED				

CLASSIFICATION OF: DRAWING: U
PART: U DRAWING: U

TITLE

(P-25)

FVTX

ROC PROTOTYPE
Slow Controls Fiber Link

TOLERANCE (UNLESS OTHERWISE NOTED)
X= ± — 0.XX= ± — ANGULAR ± —
0.X= ± — 0.XXX= ± — FINISH ± —

SCALE	NO. SHEETS	DRAWING NO.	SHEET SIZE	SHEET NO.
N/A	1	126Y-267898	D	42

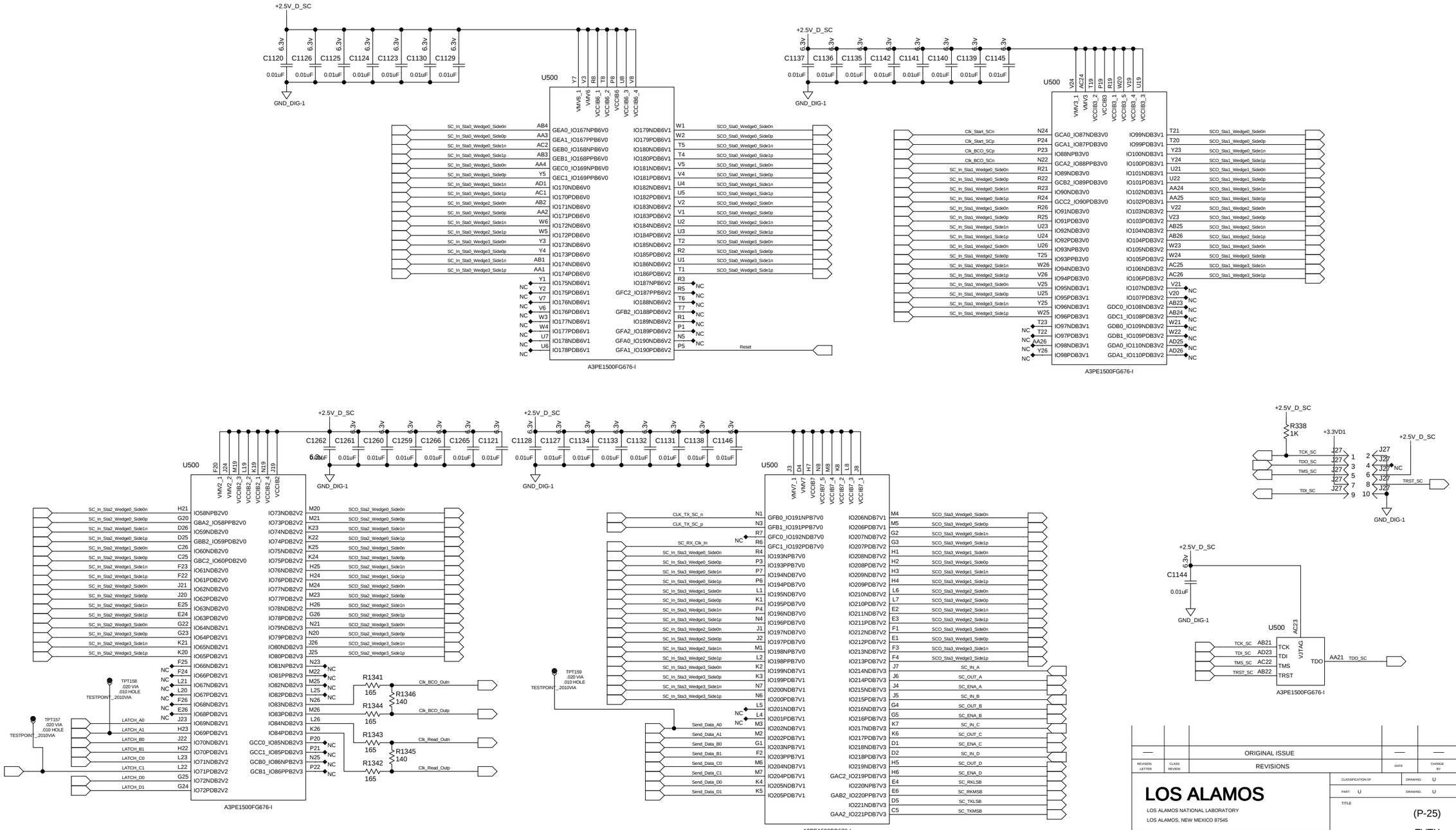

AS OF 10/05/2010 @ 12:50PM

REVISION LETTER	CLASS REVIEW	REVISIONS	DATE	CHANGE BY	CHECK BY	APPROVED BY
—		ORIGINAL ISSUE	—	—	—	—

LOS ALAMOS

LOS ALAMOS NATIONAL LABORATORY
LOS ALAMOS, NEW MEXICO 87545

MENTOR 2005

	NAME	SIGNATURE	DATE	GROUP
ORIGINATED				
DESIGNED				
DRAWN	S. CHACON	S. CHACON	APR 2009	AOT-IC
CHECKED	M. PROKOP	M. PROKOP	APR 2009	AOT-RFE
PROJ. ENGR.	M. PROKOP	M. PROKOP	APR 2009	AOT-RFE
APPROVED				
RELEASED				

CLASSIFICATION OF: DRAWING: U
PART: U DRAWING: U

TITLE

(P-25)

FVTX

ROC PROTOTYPE
Slow Controls FPGA

TOLERANCE (UNLESS OTHERWISE NOTED)
X= ± — 0.XX= ± — ANGULAR ± —
0.X= ± — 0.XXX= ± — FINISH ± —

SCALE	NO. SHEETS	DRAWING NO.	SIZE	SHEET NO.
N/A	1	126Y-267898	D	43

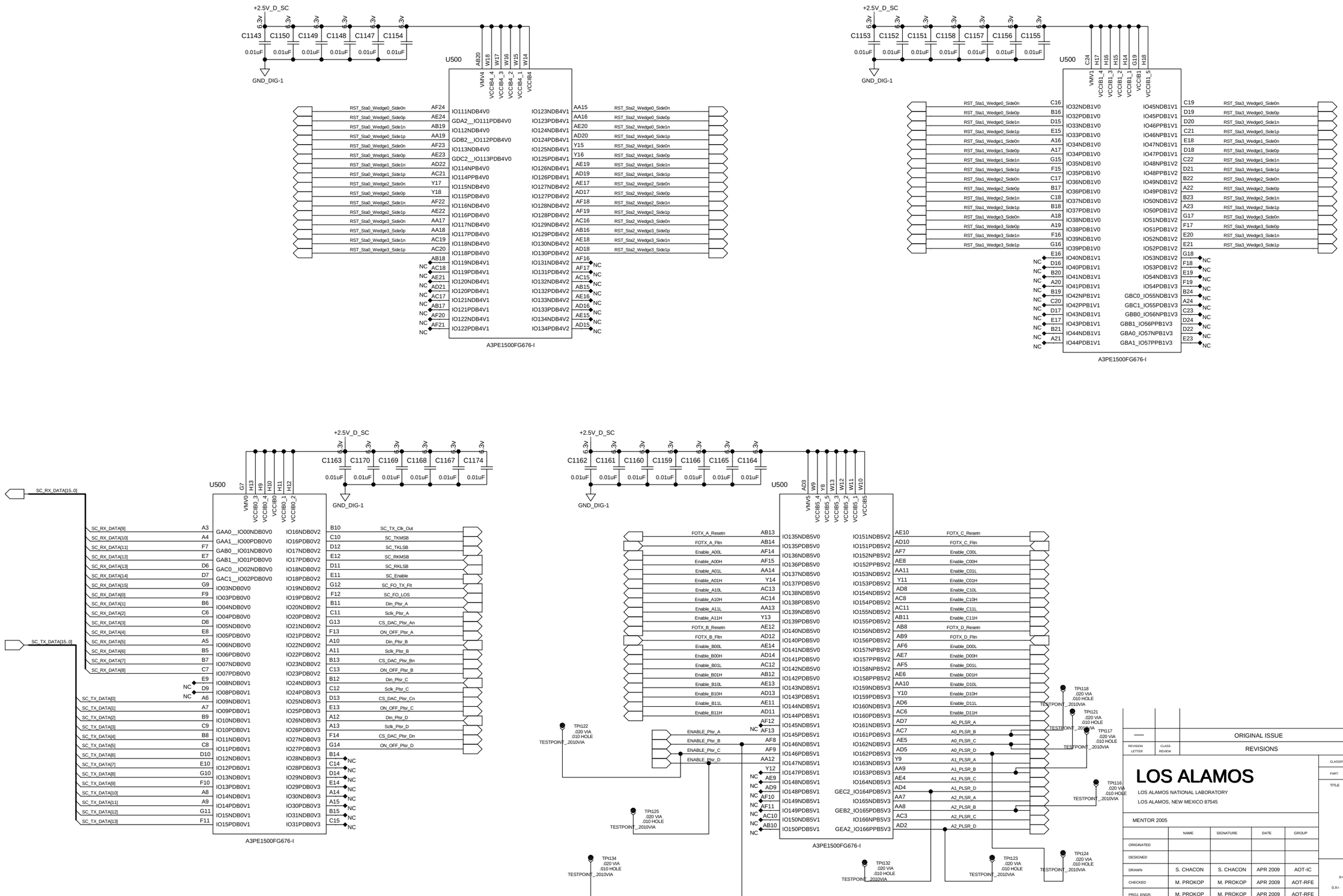

AS OF 10/05/2010 @ 12:50PM

REVISION LETTER	CLASS REVIEW	REVISIONS	DATE	CHANGE BY	CHECK BY	APPROVED BY
—		ORIGINAL ISSUE	—	—	—	—

LOS ALAMOS

LOS ALAMOS NATIONAL LABORATORY
LOS ALAMOS, NEW MEXICO 87545

MENTOR 2005

	NAME	SIGNATURE	DATE	GROUP
ORIGINATED				
DESIGNED				
DRAWN	S. CHACON	S. CHACON	APR 2009	AOT-IC
CHECKED	M. PROKOP	M. PROKOP	APR 2009	AOT-RFE
PROJ. ENGR.	M. PROKOP	M. PROKOP	APR 2009	AOT-RFE
APPROVED				
RELEASED				

CLASSIFICATION OF DRAWING: U
PART: U DRAWING: U

TITLE

(P-25)

FVTX
ROC PROTOTYPE
Slow Controls FPGA

TOLERANCE (UNLESS OTHERWISE NOTED)
X= ± ___ 0.XX= ± ___ ANGULAR ± ___
0.X= ± ___ 0.XXX= ± ___ FINISH ± ___

SCALE	NO. SHEETS	DRAWING NO.	SIZE	SHEET NO.
N/A	1	126Y-267898	D	44

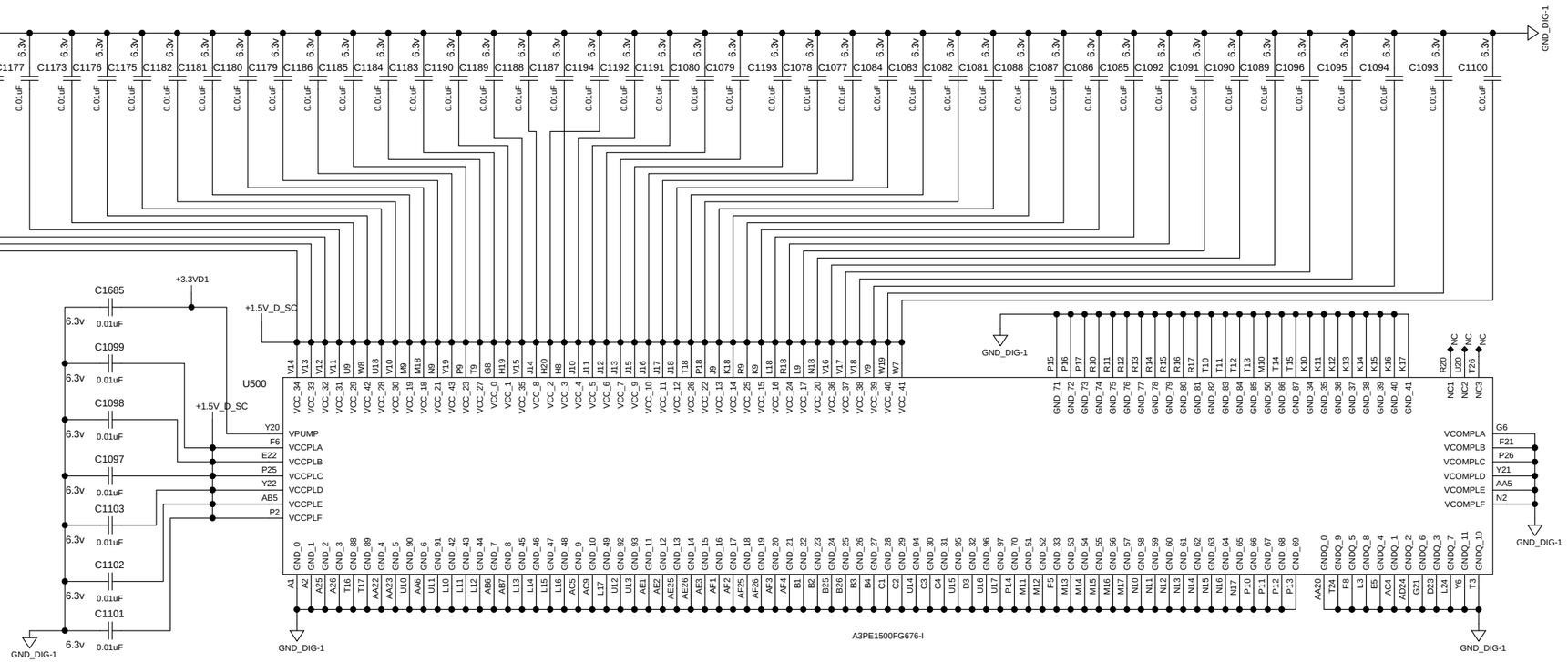

AS OF 10/05/2010 @ 12:50PM

REVISION LETTER	CLASS REVIEW	REVISIONS	DATE	CHANGE BY	CHECK BY	APPROVED BY
—		ORIGINAL ISSUE	—	—	—	—

LOS ALAMOS

LOS ALAMOS NATIONAL LABORATORY
LOS ALAMOS, NEW MEXICO 87545

MENTOR 2005

	NAME	SIGNATURE	DATE	GROUP
ORIGINATED				
DESIGNED				
DRAWN	S. CHACON	S. CHACON	APR 2009	AOT-IC
CHECKED	M. PROKOP	M. PROKOP	APR 2009	AOT-RFE
PROJ. ENGR.	M. PROKOP	M. PROKOP	APR 2009	AOT-RFE
APPROVED				
RELEASED				

CLASSIFICATION OF: DRAWING: U
PART: U DRAWING: U

TITLE

(P-25)

FVTX

ROC PROTOTYPE
Slow Controls FPGA

TOLERANCE (UNLESS OTHERWISE NOTED)
X= ± 0.XX= ± ANGULAR ±
0.X= ± 0.XXX= ± FINISH ±

SCALE	NO. SHEETS	DRAWING NO.	SIZE	SHEET NO.
N/A	1	126Y-267898	D	45

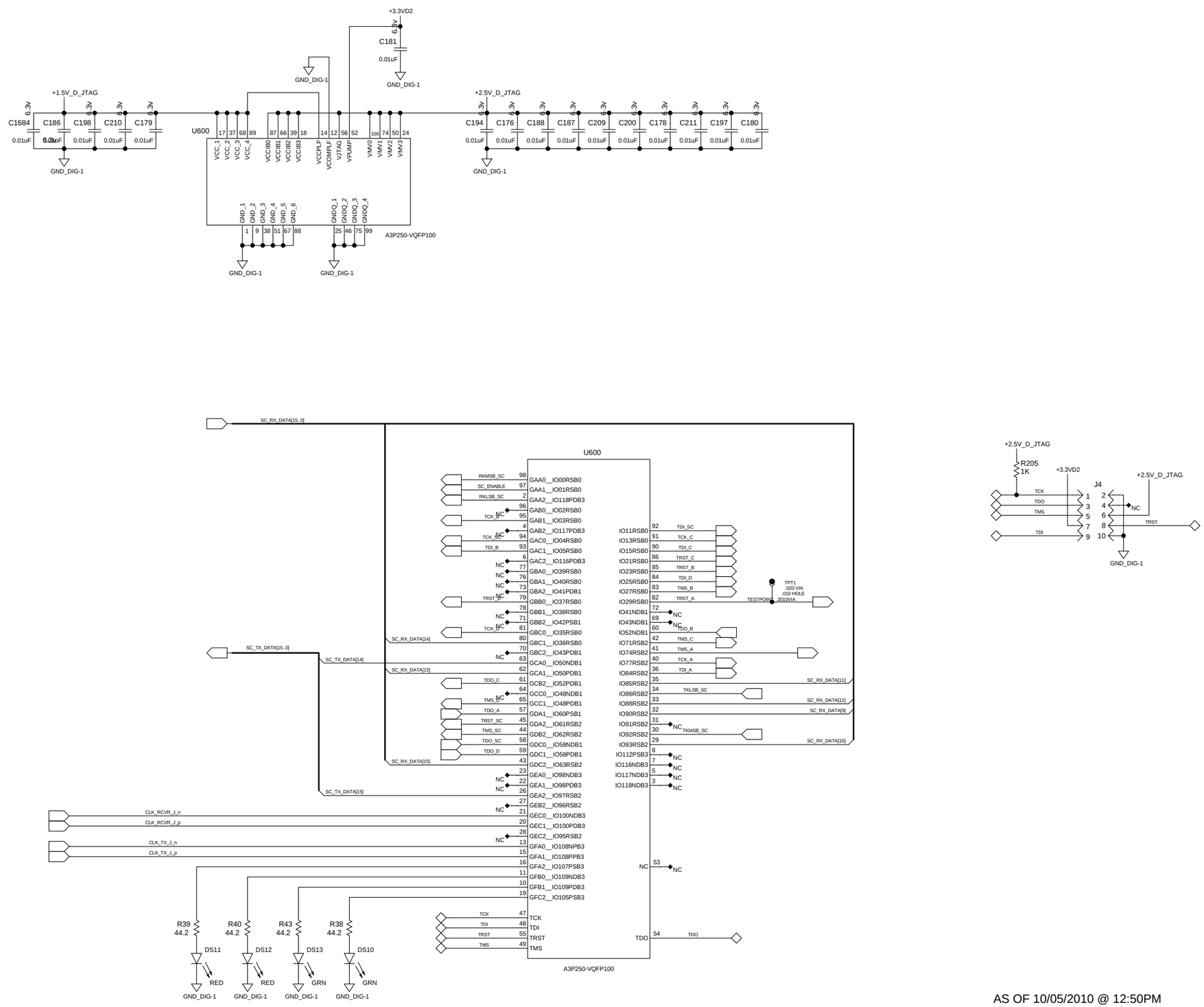

AS OF 10/05/2010 @ 12:50PM

REVISION LETTER	CLASS REVIEW	REVISIONS	DATE	CHANGE BY	CHECK BY	APPROVED BY
—		ORIGINAL ISSUE	—	—	—	—

LOS ALAMOS

LOS ALAMOS NATIONAL LABORATORY
LOS ALAMOS, NEW MEXICO 87545

MENTOR 2005

	NAME	SIGNATURE	DATE	GROUP
ORIGINATED				
DESIGNED				
DRAWN	S. CHACON	S. CHACON	APR 2009	AOT-IC
CHECKED	M. PROKOP	M. PROKOP	APR 2009	AOT-RFE
PROJ. ENGR.	M. PROKOP	M. PROKOP	APR 2009	AOT-RFE
APPROVED				
RELEASED				

CLASSIFICATION OF: DRAWING: U
PART: U DRAWING: U

TITLE

(P-25)

FVTX
ROC PROTOTYPE
JTAG FPGA

TOLERANCE (UNLESS OTHERWISE NOTED)
X.X= ± — 0.XX= ± — ANGULAR ± —
0.X= ± — 0.XXX= ± — FINISH ± —

SCALE	NO. SHEETS	DRAWING NO.	SIZE	SHEET NO.
N/A	1	126Y-267898	D	46

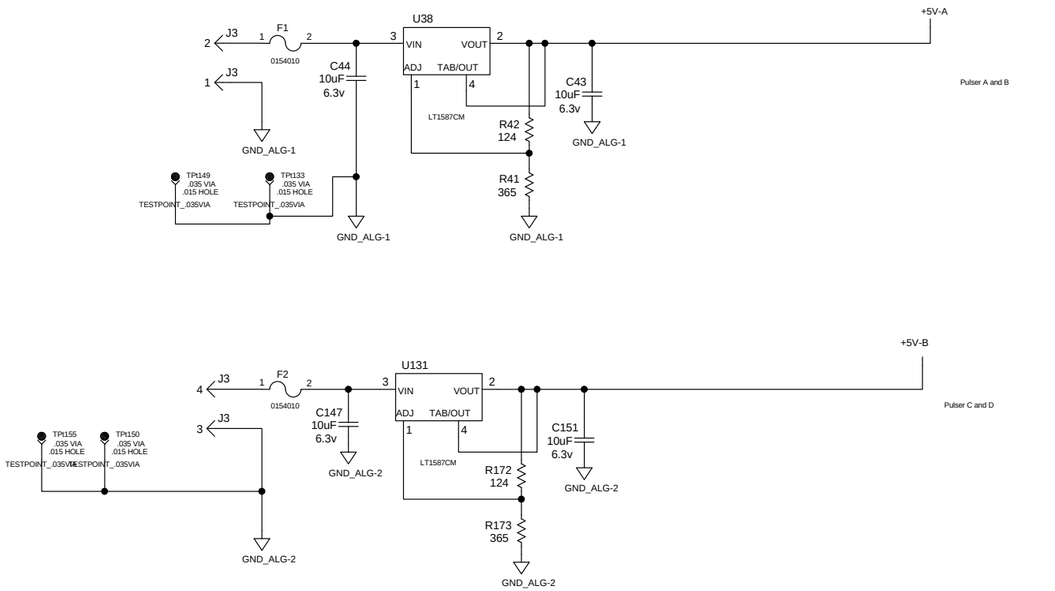

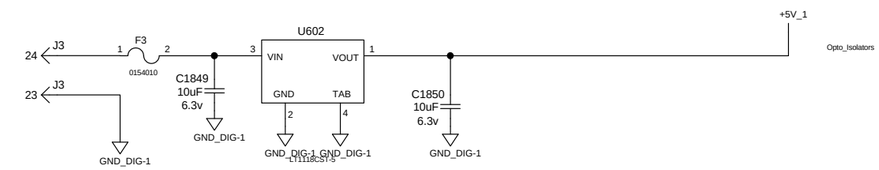

AS OF 10/05/2010 @ 12:50PM

REVISION LETTER	CLASS REVIEW	REVISIONS	DATE	CHANGE BY	CHECK BY	APPROVED BY
—		ORIGINAL ISSUE	—	—	—	—

LOS ALAMOS

LOS ALAMOS NATIONAL LABORATORY
LOS ALAMOS, NEW MEXICO 87545

MENTOR 2005

	NAME	SIGNATURE	DATE	GROUP
ORIGINATED				
DESIGNED				
DRAWN	S. CHACON	S. CHACON	APR 2009	AOT-IC
CHECKED	M. PROKOP	M. PROKOP	APR 2009	AOT-RFE
PROJ. ENGR.	M. PROKOP	M. PROKOP	APR 2009	AOT-RFE
APPROVED				
RELEASED				

CLASSIFICATION OF: DRAWING: U

PART: U DRAWING: U

TITLE

(P-25)

FVTX
ROC PROTOTYPE
+5V POWER

TOLERANCE (UNLESS OTHERWISE NOTED)

X= ± ——— 0.XX= ± ——— ANGULAR ± ———
0.X= ± ——— 0.XXX= ± ——— FINISH ± ———

SCALE	NO. SHEETS	DRAWING NO.	SIZE	SHEET NO.
N/A	1	126Y-267898	D	47

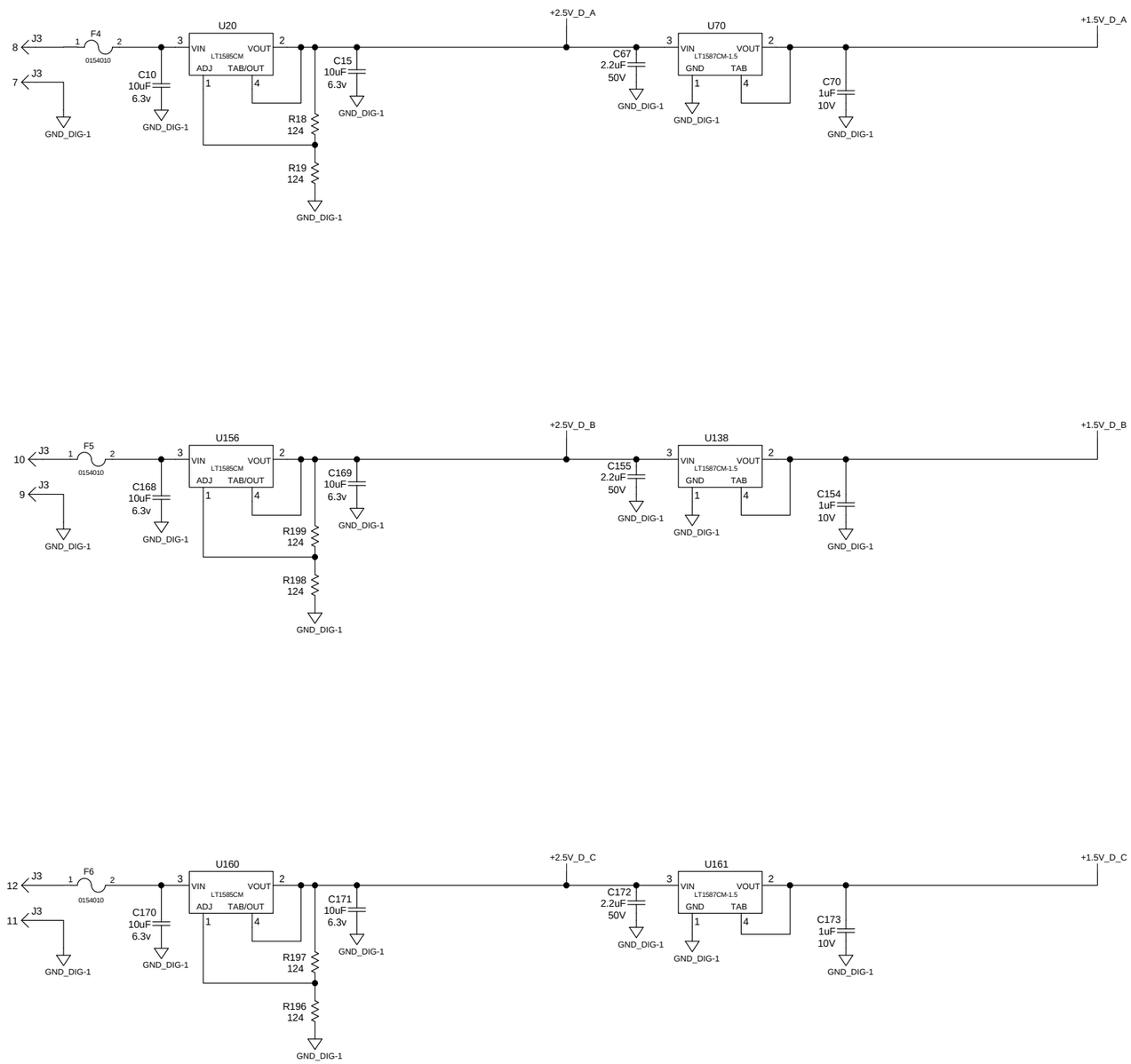

AS OF 10/05/2010 @ 12:50PM

REVISION LETTER	CLASS REVIEW	REVISIONS	DATE	CHANGE BY	CHECK BY	APPROVED BY
—		ORIGINAL ISSUE	—	—	—	—

LOS ALAMOS

LOS ALAMOS NATIONAL LABORATORY
LOS ALAMOS, NEW MEXICO 87545

MENTOR 2005

	NAME	SIGNATURE	DATE	GROUP
ORIGINATED				
DESIGNED				
DRAWN	S. CHACON	S. CHACON	APR 2009	AOT-IC
CHECKED	M. PROKOP	M. PROKOP	APR 2009	AOT-RFE
PROJ. ENGR.	M. PROKOP	M. PROKOP	APR 2009	AOT-RFE
APPROVED				
RELEASED				

CLASSIFICATION OF DRAWING: U
PART: U DRAWING: U

TITLE

(P-25)

FVTX
ROC PROTOTYPE
FPGA / PWR SUPPLY

TOLERANCE (UNLESS OTHERWISE NOTED)
X= ± — 0.XX= ± — ANGULAR ± —
0.X= ± — 0.XXX= ± — FINISH ± —

SCALE	NO. SHEETS	DRAWING NO.	SIZE	SHEET NO.
N/A	1	126Y-267898	D	48

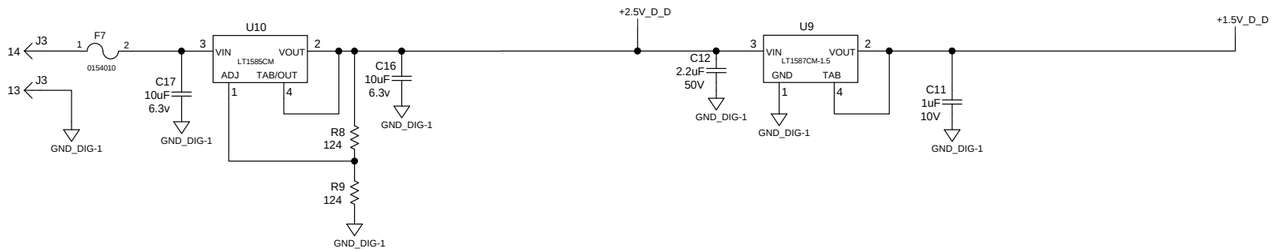

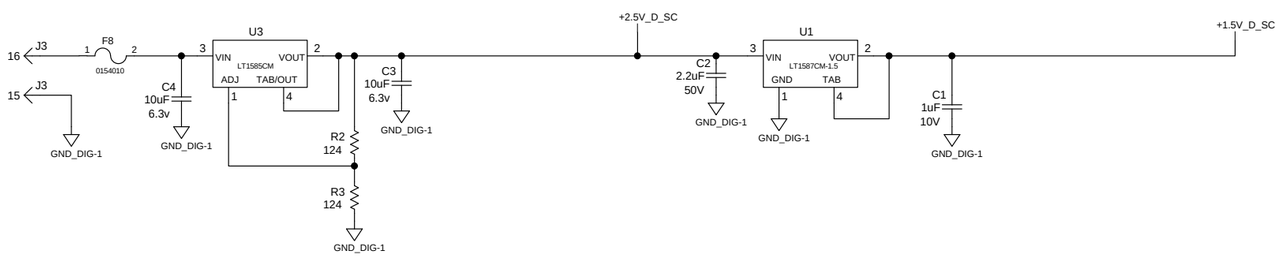

AS OF 10/05/2010 @ 12:50PM

REVISION LETTER	CLASS REVIEW	REVISIONS	DATE	CHANGE BY	CHECK BY	APPROVED BY
—		ORIGINAL ISSUE	—	—	—	—

LOS ALAMOS

LOS ALAMOS NATIONAL LABORATORY
LOS ALAMOS, NEW MEXICO 87545

MENTOR 2005

	NAME	SIGNATURE	DATE	GROUP
ORIGINATED				
DESIGNED				
DRAWN	S. CHACON	S. CHACON	APR 2009	AOT-IC
CHECKED	M. PROKOP	M. PROKOP	APR 2009	AOT-RFE
PROJ. ENGR.	M. PROKOP	M. PROKOP	APR 2009	AOT-RFE
APPROVED				
RELEASED				

CLASSIFICATION OF: DRAWING: U

PART: U DRAWING: U

TITLE

(P-25)

FVTX
ROC PROTOTYPE
FPGA / PWR SUPPLY

TOLERANCE (UNLESS OTHERWISE NOTED)

X= ± — 0.XX= ± — ANGULAR ± —
0.X= ± — 0.XXX= ± — FINISH ± —

SCALE	NO. SHEETS	DRAWING NO.	SIZE	SHEET NO.
N/A	1	126Y-267898	D	49

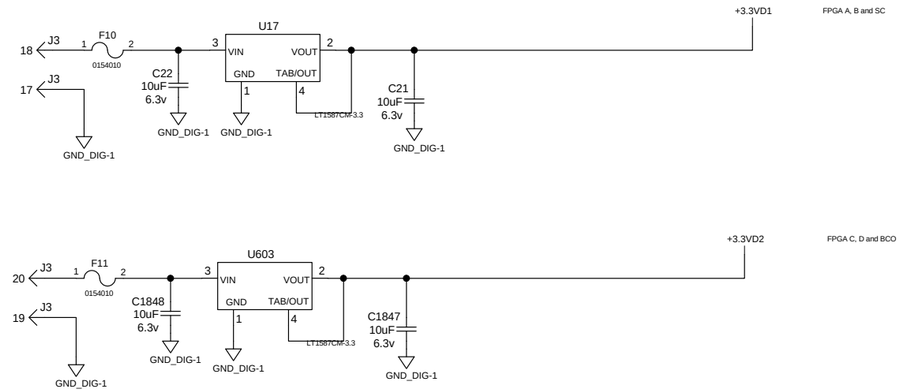

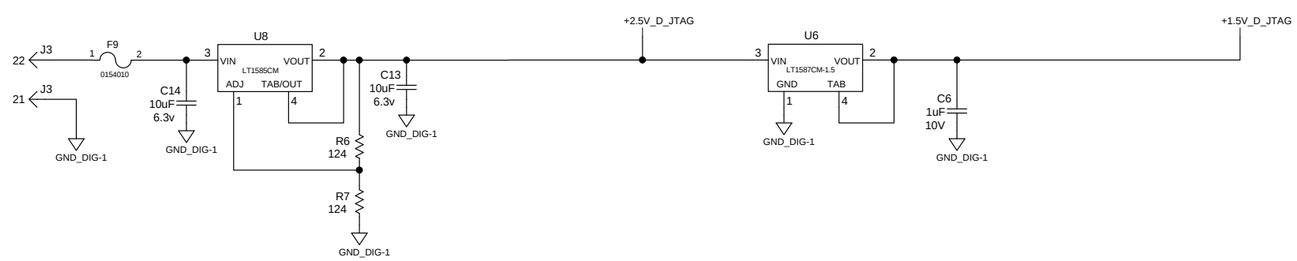

AS OF 10/05/2010 @ 12:50PM

REVISION LETTER	CLASS REVIEW	REVISIONS	DATE	CHANGE BY	CHECK BY	APPROVED BY
—		ORIGINAL ISSUE	—	—	—	—

LOS ALAMOS

LOS ALAMOS NATIONAL LABORATORY
LOS ALAMOS, NEW MEXICO 87545

MENTOR 2005

	NAME	SIGNATURE	DATE	GROUP
ORIGINATED				
DESIGNED				
DRAWN	S. CHACON	S. CHACON	APR 2009	AOT-IC
CHECKED	M. PROKOP	M. PROKOP	APR 2009	AOT-RFE
PROJ. ENGR.	M. PROKOP	M. PROKOP	APR 2009	AOT-RFE
APPROVED				
RELEASED				

CLASSIFICATION OF: DRAWING: U

PART: U DRAWING: U

TITLE

(P-25)

FVTX
ROC PROTOTYPE
FO/JTAG/PWR SUPPLY

TOLERANCE (UNLESS OTHERWISE NOTED)

X= ± — 0.XX= ± — ANGULAR ± —
0.X= ± — 0.XXX= ± — FINISH ± —

SCALE	NO. SHEETS	DRAWING NO.	SIZE	SHEET NO.
N/A	1	126Y-267898	D	50

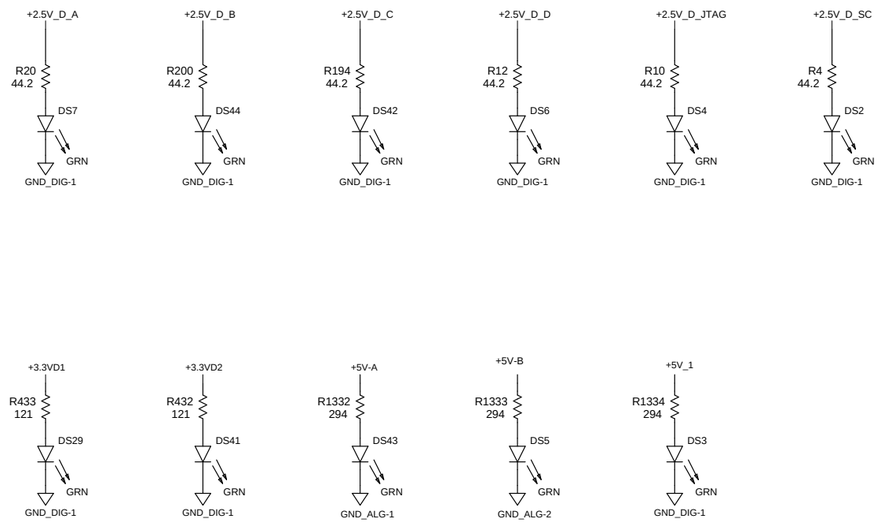

AS OF 10/05/2010 @ 12:50PM

REVISION LETTER	CLASS REVIEW	REVISIONS	DATE	CHANGE BY	CHECK BY	APPROVED BY
—		ORIGINAL ISSUE	—	—	—	—

LOS ALAMOS

LOS ALAMOS NATIONAL LABORATORY
LOS ALAMOS, NEW MEXICO 87545

MENTOR 2005

	NAME	SIGNATURE	DATE	GROUP
ORIGINATED				
DESIGNED				
DRAWN	S. CHACON	S. CHACON	APR 2009	AOT-IC
CHECKED	M. PROKOP	M. PROKOP	APR 2009	AOT-RFE
PROJ. ENGR.	M. PROKOP	M. PROKOP	APR 2009	AOT-RFE
APPROVED				
RELEASED				

CLASSIFICATION OF DRAWING: U
PART: U DRAWING: U

TITLE

(P-25)

FVTX
ROC PROTOTYPE
SC_/PWR SUPPLY

TOLERANCE (UNLESS OTHERWISE NOTED)
X= ± — 0.XX= ± — ANGULAR ± —
0.X= ± — 0.XXX= ± — FINISH ± —

SCALE	NO. SHEETS	DRAWING NO.	SIZE	SHEET NO.
N/A	1	126Y-267898	D	51

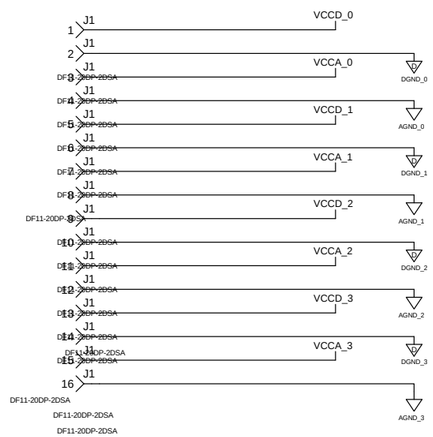

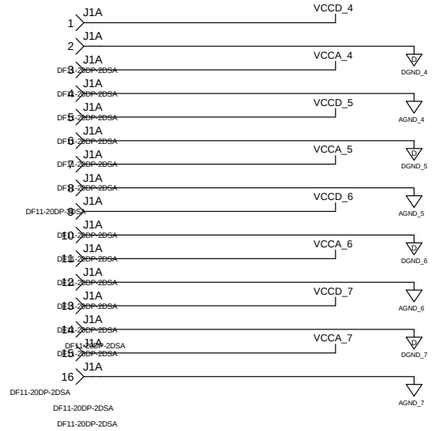

AS OF 10/05/2010 @ 12:50PM

REVISION LETTER	CLASS REVIEW	REVISIONS	DATE	CHANGE BY	CHECK BY	APPROVED BY
—		ORIGINAL ISSUE	—	—	—	—

LOS ALAMOS

LOS ALAMOS NATIONAL LABORATORY
LOS ALAMOS, NEW MEXICO 87545

MENTOR 2005

	NAME	SIGNATURE	DATE	GROUP
ORIGINATED				
DESIGNED				
DRAWN	S. CHACON	S. CHACON	APR 2009	AOT-IC
CHECKED	M. PROKOP	M. PROKOP	APR 2009	AOT-RFE
PROJ. ENGR.	M. PROKOP	M. PROKOP	APR 2009	AOT-RFE
APPROVED				
RELEASED				

CLASSIFICATION OF DRAWING: U

PART: U DRAWING: U

TITLE

(P-25)

FVTX
ROC PROTOTYPE
Station 0-1 Wedge Power

TOLERANCE (UNLESS OTHERWISE NOTED)

X= ± — 0.XX= ± — ANGULAR ± —
0.X= ± — 0.XXX= ± — FINISH ± —

SCALE	NO. SHEETS	DRAWING NO.	SIZE	SHEET NO.
N/A	1	126Y-267898	D	52

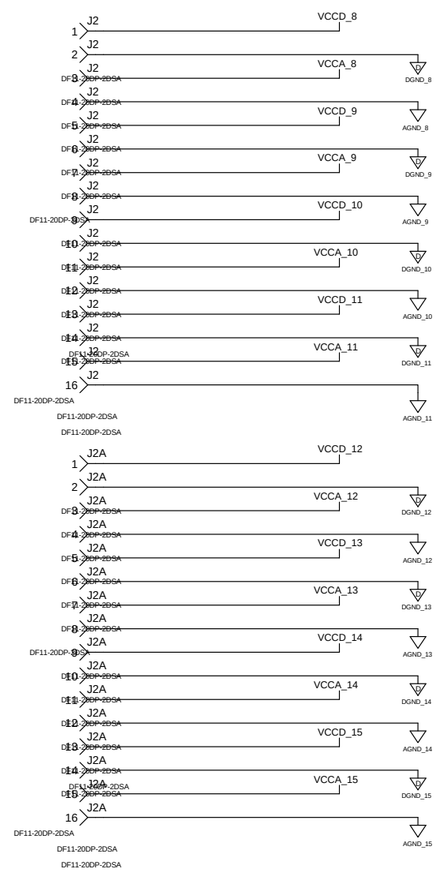

AS OF 10/05/2010 @ 12:50PM

REVISION LETTER	CLASS REVIEW	REVISIONS	DATE	CHANGE BY	CHECK BY	APPROVED BY
—		ORIGINAL ISSUE	—	—	—	—

LOS ALAMOS

LOS ALAMOS NATIONAL LABORATORY
LOS ALAMOS, NEW MEXICO 87545

MENTOR 2005

	NAME	SIGNATURE	DATE	GROUP
ORIGINATED				
DESIGNED				
DRAWN	S. CHACON	S. CHACON	APR 2009	AOT-IC
CHECKED	M. PROKOP	M. PROKOP	APR 2009	AOT-RFE
PROJ. ENGR.	M. PROKOP	M. PROKOP	APR 2009	AOT-RFE
APPROVED				
RELEASED				

CLASSIFICATION OF DRAWING: U

PART: U DRAWING: U

TITLE

(P-25)

FVTX
ROC PROTOTYPE
Station 2-3 Wedge Power

TOLERANCE (UNLESS OTHERWISE NOTED)

X= ± ___ 0.XX= ± ___ ANGULAR ± ___
0.X= ± ___ 0.XXX= ± ___ FINISH ± ___

SCALE	NO. SHEETS	DRAWING NO.	SIZE	SHEET NO.
N/A	1	126Y-267898	D	53

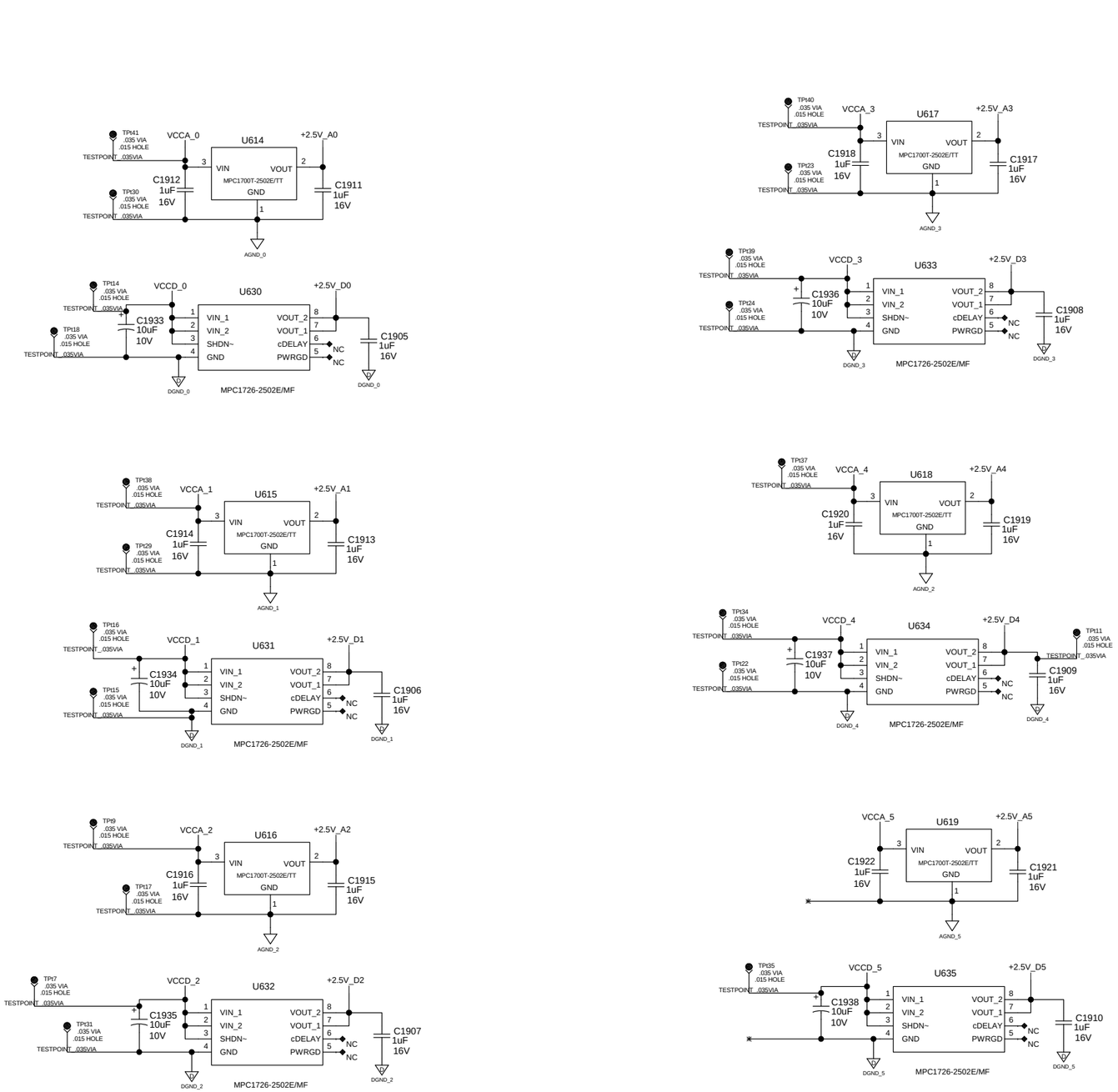

AS OF 10/05/2010 @ 12:50PM

REVISION LETTER	CLASS REVIEW	REVISIONS	DATE	CHANGE BY	CHECK BY	APPROVED BY
—		ORIGINAL ISSUE	—	—	—	—

LOS ALAMOS

LOS ALAMOS NATIONAL LABORATORY
LOS ALAMOS, NEW MEXICO 87545

MENTOR 2005

	NAME	SIGNATURE	DATE	GROUP
ORIGINATED				
DESIGNED				
DRAWN	S. CHACON	S. CHACON	APR 2009	AOT-IC
CHECKED	M. PROKOP	M. PROKOP	APR 2009	AOT-RFE
PROJ. ENGR.	M. PROKOP	M. PROKOP	APR 2009	AOT-RFE
APPROVED				
RELEASED				

CLASSIFICATION OF — DRAWING: U
PART: U — DRAWING: U

TITLE

(P-25)

FVTX
ROC PROTOTYPE
Station 0-1 Power Supplies

TOLERANCE (UNLESS OTHERWISE NOTED)
X= ± — 0.XX= ± — ANGULAR ± —
0.X= ± — 0.XXX= ± — FINISH ± —

SCALE	NO. SHEETS	DRAWING NO.	SIZE	SHEET NO.
N/A	1	126Y-267898	D	54

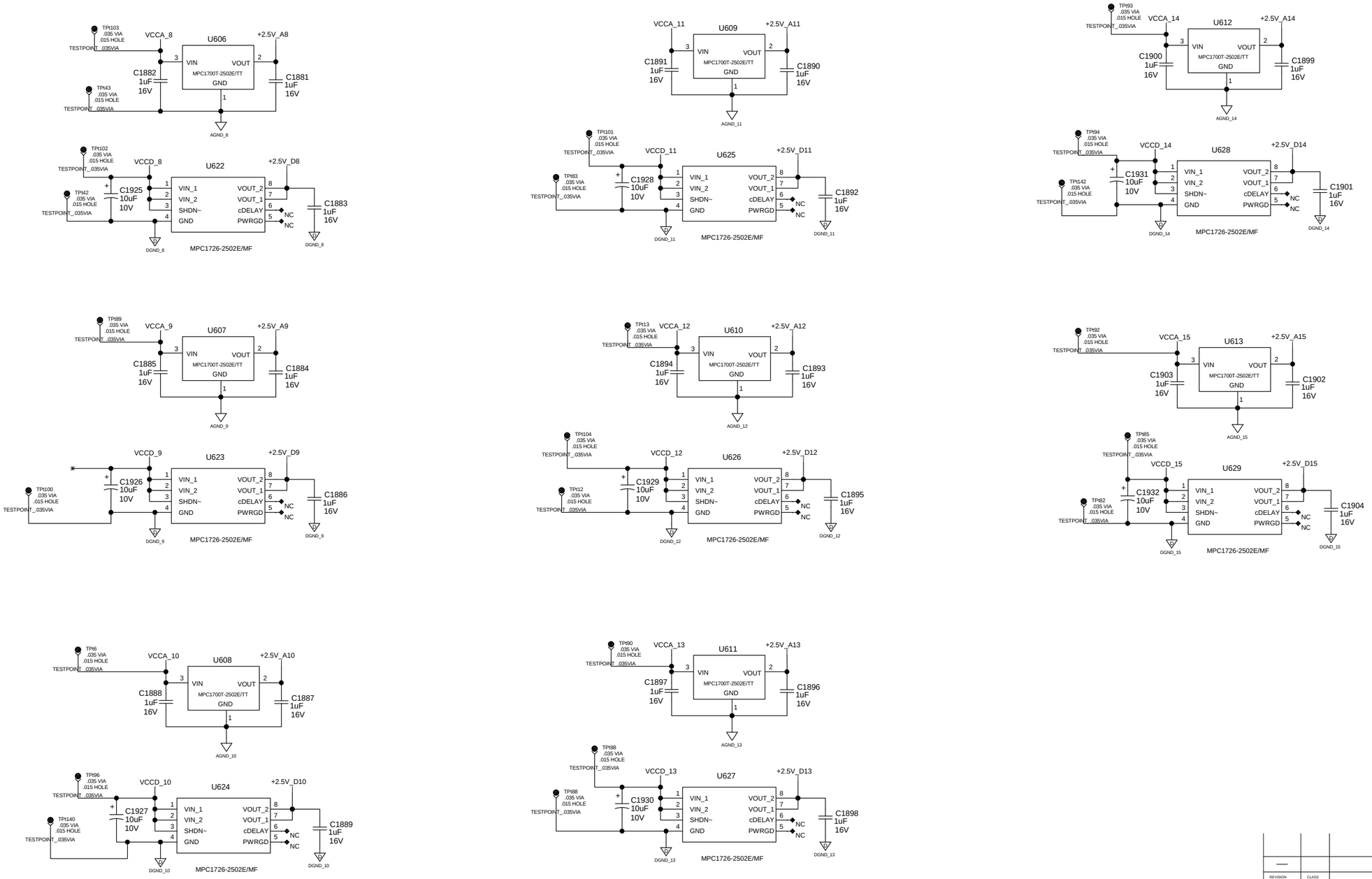

AS OF 10/05/2010 @ 12:50PM

REVISION LETTER	CLASS REVIEW	REVISIONS	DATE	CHANGE BY	CHECK BY	APPROVED BY
—		ORIGINAL ISSUE	—	—	—	—

LOS ALAMOS

LOS ALAMOS NATIONAL LABORATORY
LOS ALAMOS, NEW MEXICO 87545

MENTOR 2005

	NAME	SIGNATURE	DATE	GROUP
ORIGINATED				
DESIGNED				
DRAWN	S. CHACON	S. CHACON	APR 2009	AOT-IC
CHECKED	M. PROKOP	M. PROKOP	APR 2009	AOT-RFE
PROJ. ENGR.	M. PROKOP	M. PROKOP	APR 2009	AOT-RFE
APPROVED				
RELEASED				

CLASSIFICATION OF: DRAWING: U
PART: U DRAWING: U

TITLE

(P-25)

FVTX
ROC PROTOTYPE
Station 2-3 Power Supplies

TOLERANCE (UNLESS OTHERWISE NOTED)
X= ± — 0.XX= ± — ANGULAR ± —
0.X= ± — 0.XXX= ± — FINISH ± —

SCALE	NO. SHEETS	DRAWING NO.	SIZE	SHEET NO.
N/A	1	126Y-267898	D	55

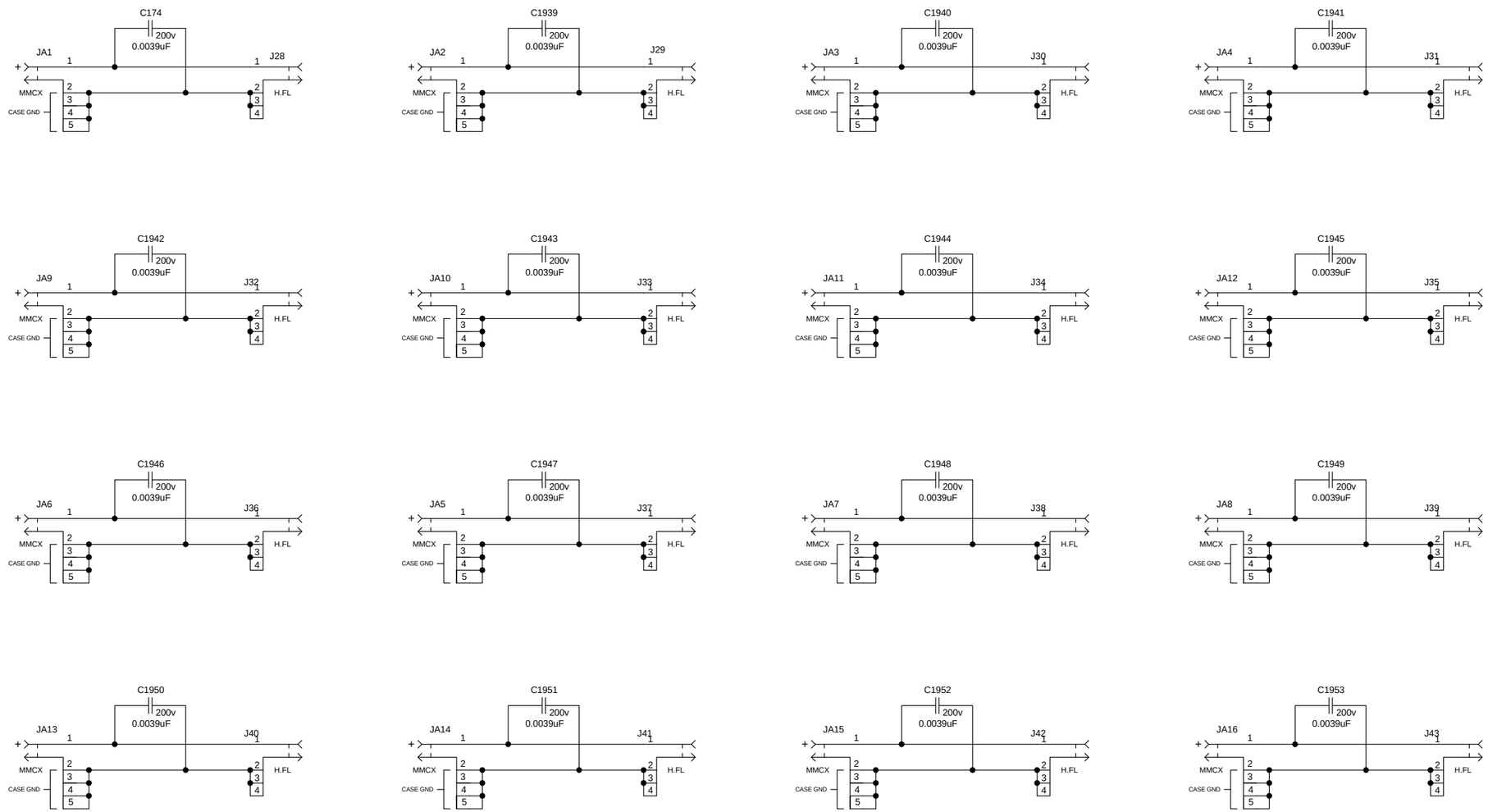

200vdc DETECTOR BIAS INPUT POWER

AS OF 10/05/2010 @ 12:50PM

REVISION LETTER	CLASS REVIEW	REVISIONS	DATE	CHANGE BY	CHECK BY	APPROVED BY
—		ORIGINAL ISSUE	—	—	—	—

LOS ALAMOS

LOS ALAMOS NATIONAL LABORATORY
LOS ALAMOS, NEW MEXICO 87545

MENTOR 2005

	NAME	SIGNATURE	DATE	GROUP
ORIGINATED				
DESIGNED				
DRAWN	S. CHACON	S. CHACON	APR 2009	AOT-IC
CHECKED	M. PROKOP	M. PROKOP	APR 2009	AOT-RFE
PROJ. ENGR.	M. PROKOP	M. PROKOP	APR 2009	AOT-RFE
APPROVED				
RELEASED				

CLASSIFICATION OF: DRAWING: U
PART: U DRAWING: U

TITLE

(P-25)

FVTX
ROC PROTOTYPE
Bias Power Supply Connections

TOLERANCE (UNLESS OTHERWISE NOTED)
X= ± — 0.XX= ± — ANGULAR ± —
0.X= ± — 0.XXX= ± — FINISH ± —

SCALE	NO. SHEETS	DRAWING NO.	SIZE	SHEET NO.
N/A	1	126Y-267898	D	56

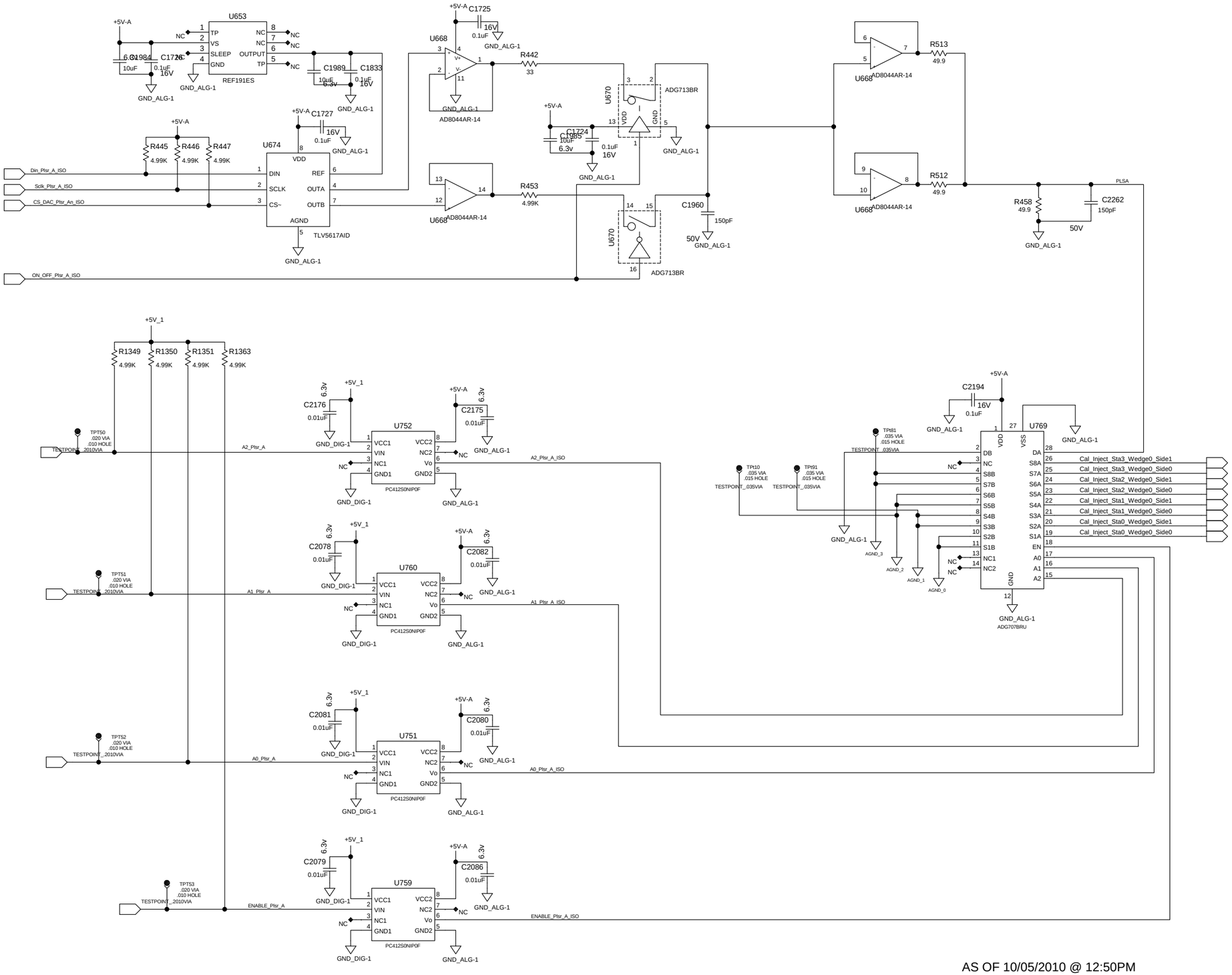

AS OF 10/05/2010 @ 12:50PM

REVISION LETTER	CLASS REVIEW	REVISIONS	DATE	CHANGE BY	CHECK BY	APPROVED BY
—		ORIGINAL ISSUE	—	—	—	—

LOS ALAMOS

LOS ALAMOS NATIONAL LABORATORY
LOS ALAMOS, NEW MEXICO 87545

MENTOR 2005

	NAME	SIGNATURE	DATE	GROUP
ORIGINATED				
DESIGNED				
DRAWN	S. CHACON	S. CHACON	APR 2009	AOT-IC
CHECKED	M. PROKOP	M. PROKOP	APR 2009	AOT-RFE
PROJ. ENGR.	M. PROKOP	M. PROKOP	APR 2009	AOT-RFE
APPROVED				
RELEASED				

CLASSIFICATION OF: DRAWING: U
PART: U DRAWING: U

TITLE

(P-25)
FVTX
ROC PROTOTYPE
CALIB. PULSER Wedge 0

TOLERANCE (UNLESS OTHERWISE NOTED)
X= ± — 0.XX= ± — ANGULAR ± —
0.X= ± — 0.XXX= ± — FINISH ± —

SCALE	NO. SHEETS	DRAWING NO.	SIZE	SHEET NO.
N/A	1	126Y-267898	D	57

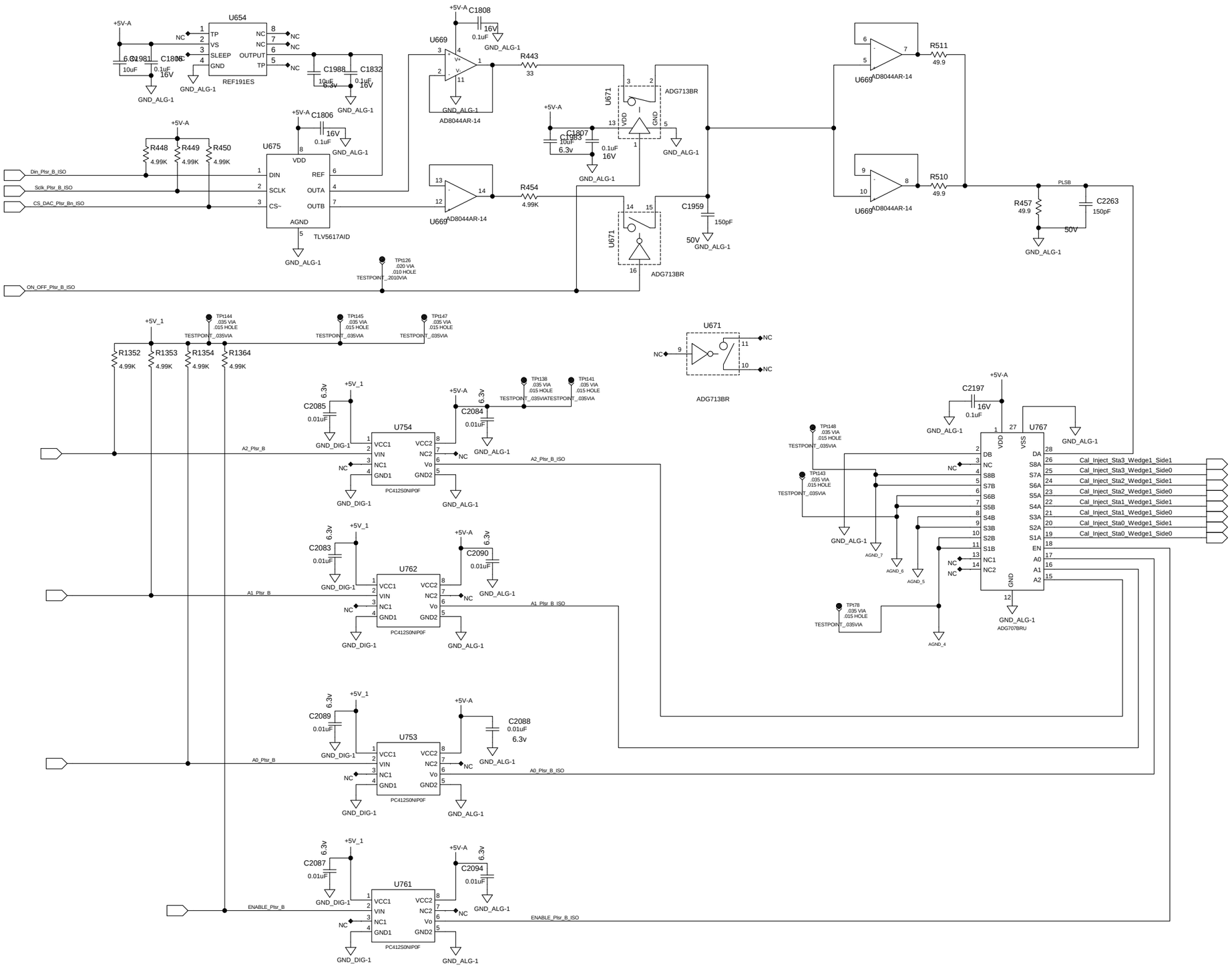

AS OF 10/05/2010 @ 12:50PM

REVISION LETTER	CLASS REVIEW	REVISIONS	DATE	CHANGE BY	CHECK BY	APPROVED BY
—		ORIGINAL ISSUE	—	—	—	—

LOS ALAMOS

LOS ALAMOS NATIONAL LABORATORY
LOS ALAMOS, NEW MEXICO 87545

MENTOR 2005

	NAME	SIGNATURE	DATE	GROUP
ORIGINATED				
DESIGNED				
DRAWN	S. CHACON	S. CHACON	APR 2009	AOT-IC
CHECKED	M. PROKOP	M. PROKOP	APR 2009	AOT-RFE
PROJ. ENGR.	M. PROKOP	M. PROKOP	APR 2009	AOT-RFE
APPROVED				
RELEASED				

CLASSIFICATION OF DRAWING: U
PART: U DRAWING: U

TITLE
(P-25)
FVTX
ROC PROTOTYPE
CALIB. PULSER Wedge 1

TOLERANCE (UNLESS OTHERWISE NOTED)
X= ± — 0.XX= ± — ANGULAR ± —
0.X= ± — 0.XXX= ± — FINISH ± —

SCALE	NO. SHEETS	DRAWING NO.	SIZE	SHEET NO.
N/A	1	126Y-267898	D	58

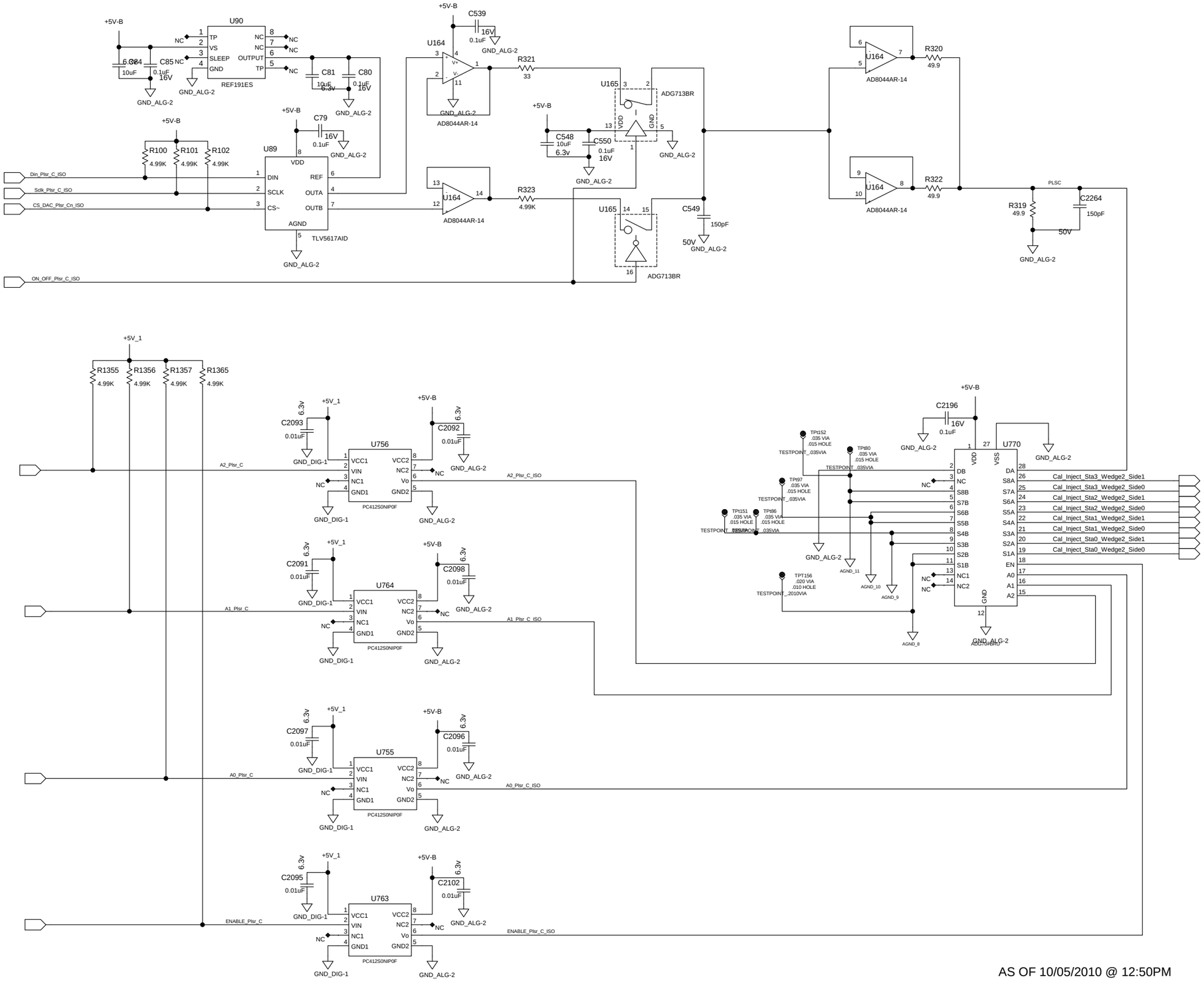

AS OF 10/05/2010 @ 12:50PM

REVISION LETTER	CLASS REVISION	REVISIONS	DATE	CHANGE BY	CHECK BY	APPROVED BY
—		ORIGINAL ISSUE	—	—	—	—

LOS ALAMOS

LOS ALAMOS NATIONAL LABORATORY
LOS ALAMOS, NEW MEXICO 87545

MENTOR 2005

	NAME	SIGNATURE	DATE	GROUP
ORIGINATED				
DESIGNED				
DRAWN	S. CHACON	S. CHACON	APR 2009	AOT-IC
CHECKED	M. PROKOP	M. PROKOP	APR 2009	AOT-RFE
PROJ. ENGR.	M. PROKOP	M. PROKOP	APR 2009	AOT-RFE
APPROVED				
RELEASED				

CLASSIFICATION OF: DRAWING: U
PART: U DRAWING: U

TITLE

(P-25)

FVTX
ROC PROTOTYPE
CALIB. PULSER Wedge 2

TOLERANCE (UNLESS OTHERWISE NOTED)
X= ± ___ 0.XX= ± ___ ANGULAR ± ___
0.X= ± ___ 0.XXX= ± ___ FINISH ± ___

SCALE	NO. SHEETS	DRAWING NO.	SIZE	SHEET NO.
N/A	1	126Y-267898	D	59

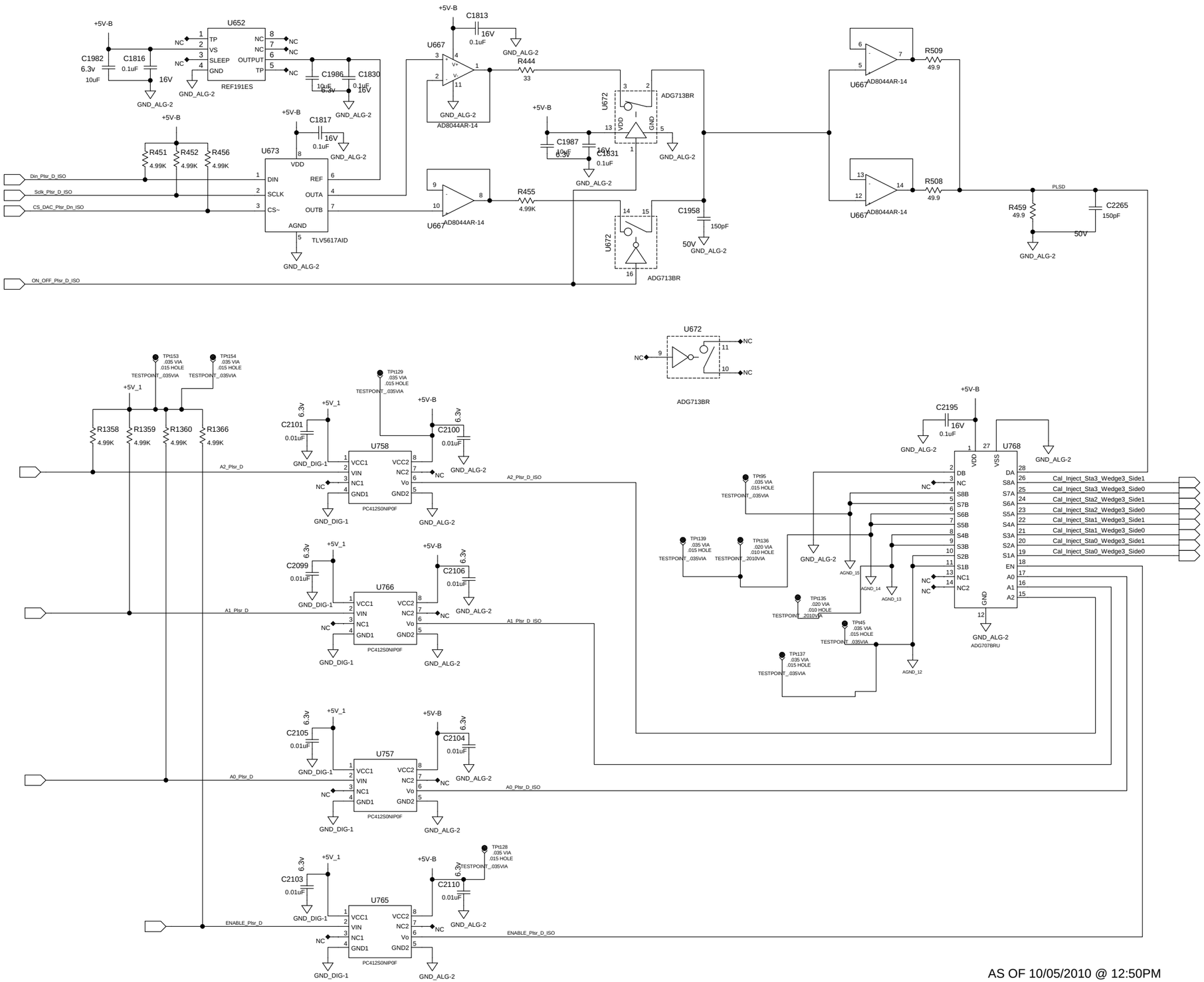

AS OF 10/05/2010 @ 12:50PM

REVISION LETTER	CLASS REVIEW	REVISIONS	DATE	CHANGE BY	CHECK BY	APPROVED BY
—		ORIGINAL ISSUE	—	—	—	—

LOS ALAMOS

LOS ALAMOS NATIONAL LABORATORY
LOS ALAMOS, NEW MEXICO 87545

MENTOR 2005

	NAME	SIGNATURE	DATE	GROUP
ORIGINATED				
DESIGNED				
DRAWN	S. CHACON	S. CHACON	APR 2009	AOT-IC
CHECKED	M. PROKOP	M. PROKOP	APR 2009	AOT-RFE
PROJ. ENGR.	M. PROKOP	M. PROKOP	APR 2009	AOT-RFE
APPROVED				
RELEASED				

CLASSIFICATION OF: DRAWING: U
PART: U DRAWING: U

TITLE

(P-25)

FVTX
ROC PROTOTYPE
CALIB. PULSER Wedge 3

TOLERANCE (UNLESS OTHERWISE NOTED)
X= ± — 0.XX= ± — ANGULAR ± —
0.X= ± — 0.XXX= ± — FINISH ± —

SCALE	NO. SHEETS	DRAWING NO.	SIZE	SHEET NO.
N/A	1	126Y-267898	D	60

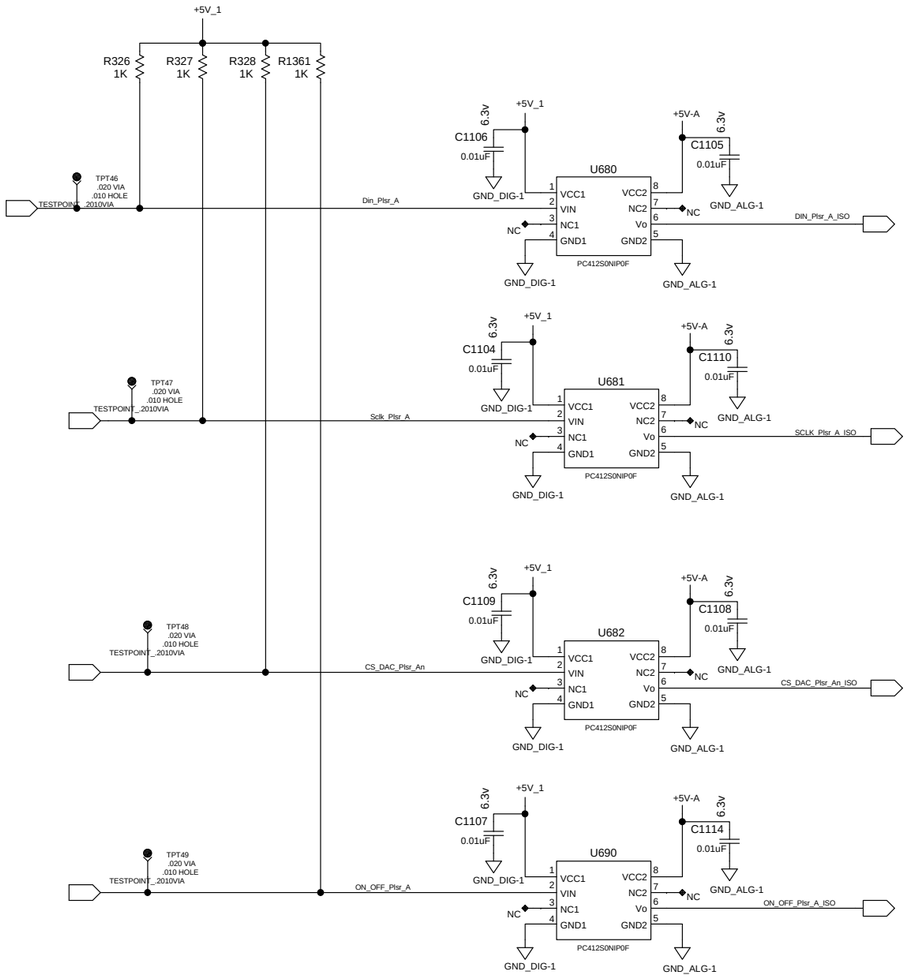

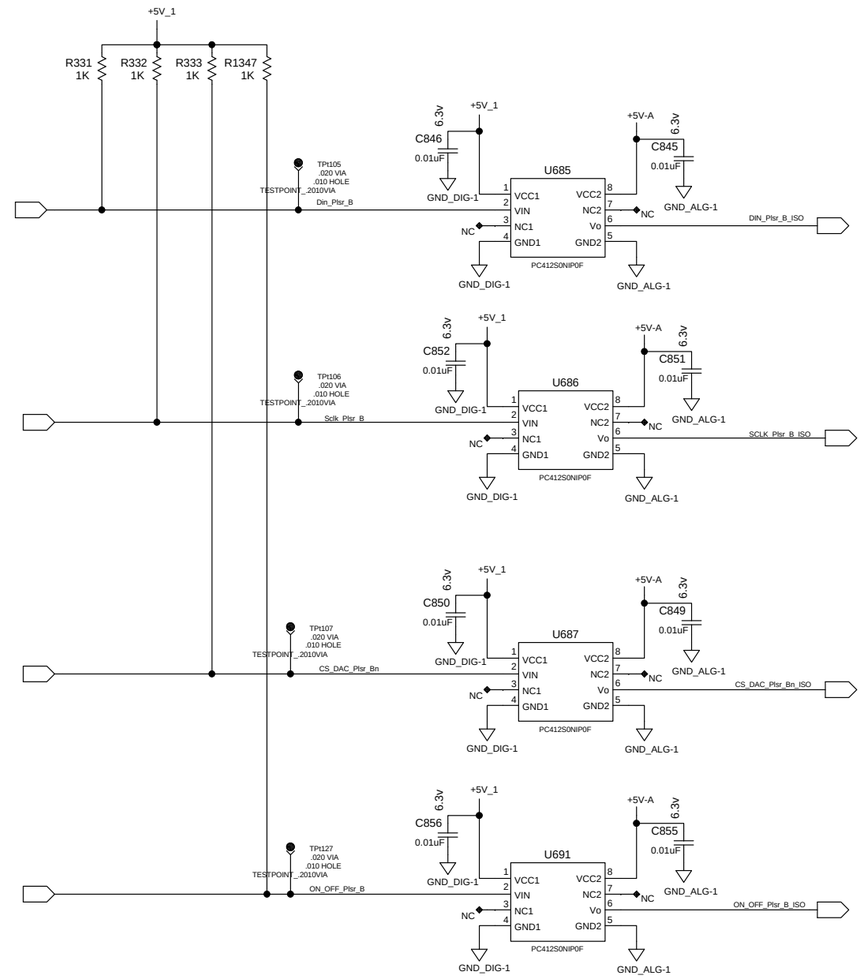

AS OF 10/05/2010 @ 12:50PM

REVISION LETTER	CLASS REVIEW	REVISIONS	DATE	CHANGE BY	CHECK BY	APPROVED BY
—		ORIGINAL ISSUE	—	—	—	—

LOS ALAMOS

LOS ALAMOS NATIONAL LABORATORY
LOS ALAMOS, NEW MEXICO 87545

MENTOR 2005

	NAME	SIGNATURE	DATE	GROUP
ORIGINATED				
DESIGNED				
DRAWN	S. CHACON	S. CHACON	APR 2009	AOT-IC
CHECKED	M. PROKOP	M. PROKOP	APR 2009	AOT-RFE
PROJ. ENGR.	M. PROKOP	M. PROKOP	APR 2009	AOT-RFE
APPROVED				
RELEASED				

CLASSIFICATION OF DRAWING: U
PART: U DRAWING: U

TITLE
(P-25)
FVTX
ROC PROTOTYPE
CAL PULSER INTERFACE A&B

TOLERANCE (UNLESS OTHERWISE NOTED)
X= ± — 0.XX= ± — ANGULAR ± —
0.X= ± — 0.XXX= ± — FINISH ± —

SCALE	NO. SHEETS	DRAWING NO.	SIZE	SHEET NO.
N/A	1	126Y-267898	D	61

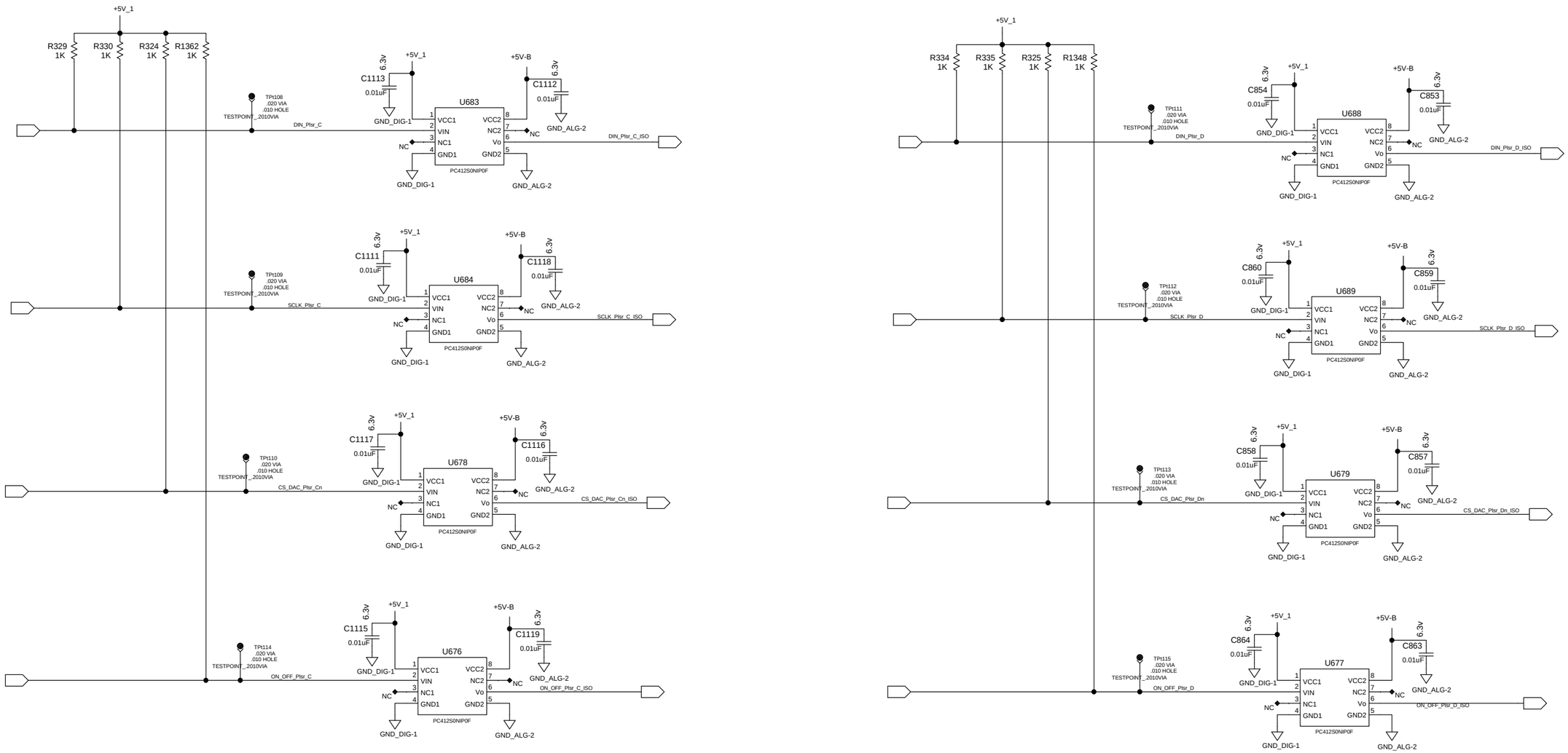

AS OF 10/05/2010 @ 12:50PM

REVISION LETTER	CLASS REVIEW	REVISIONS	DATE	CHANGE BY	CHECK BY	APPROVED BY
—		ORIGINAL ISSUE	—	—	—	—

LOS ALAMOS

LOS ALAMOS NATIONAL LABORATORY
LOS ALAMOS, NEW MEXICO 87545

MENTOR 2005

	NAME	SIGNATURE	DATE	GROUP
ORIGINATED				
DESIGNED				
DRAWN	S. CHACON	S. CHACON	APR 2009	AOT-IC
CHECKED	M. PROKOP	M. PROKOP	APR 2009	AOT-RFE
PROJ. ENGR.	M. PROKOP	M. PROKOP	APR 2009	AOT-RFE
APPROVED				
RELEASED				

CLASSIFICATION OF: DRAWING: U

PART: U DRAWING: U

TITLE

(P-25)

FVTX

ROC PROTOTYPE

CAL PULSER INTERFACE C&D

TOLERANCE (UNLESS OTHERWISE NOTED)

X= ± ___ 0.XX= ± ___ ANGULAR ± ___
0.X= ± ___ 0.XXX= ± ___ FINISH ± ___

SCALE	NO. SHEETS	DRAWING NO.	SIZE	SHEET NO.
N/A	1	126Y-267898	D	62

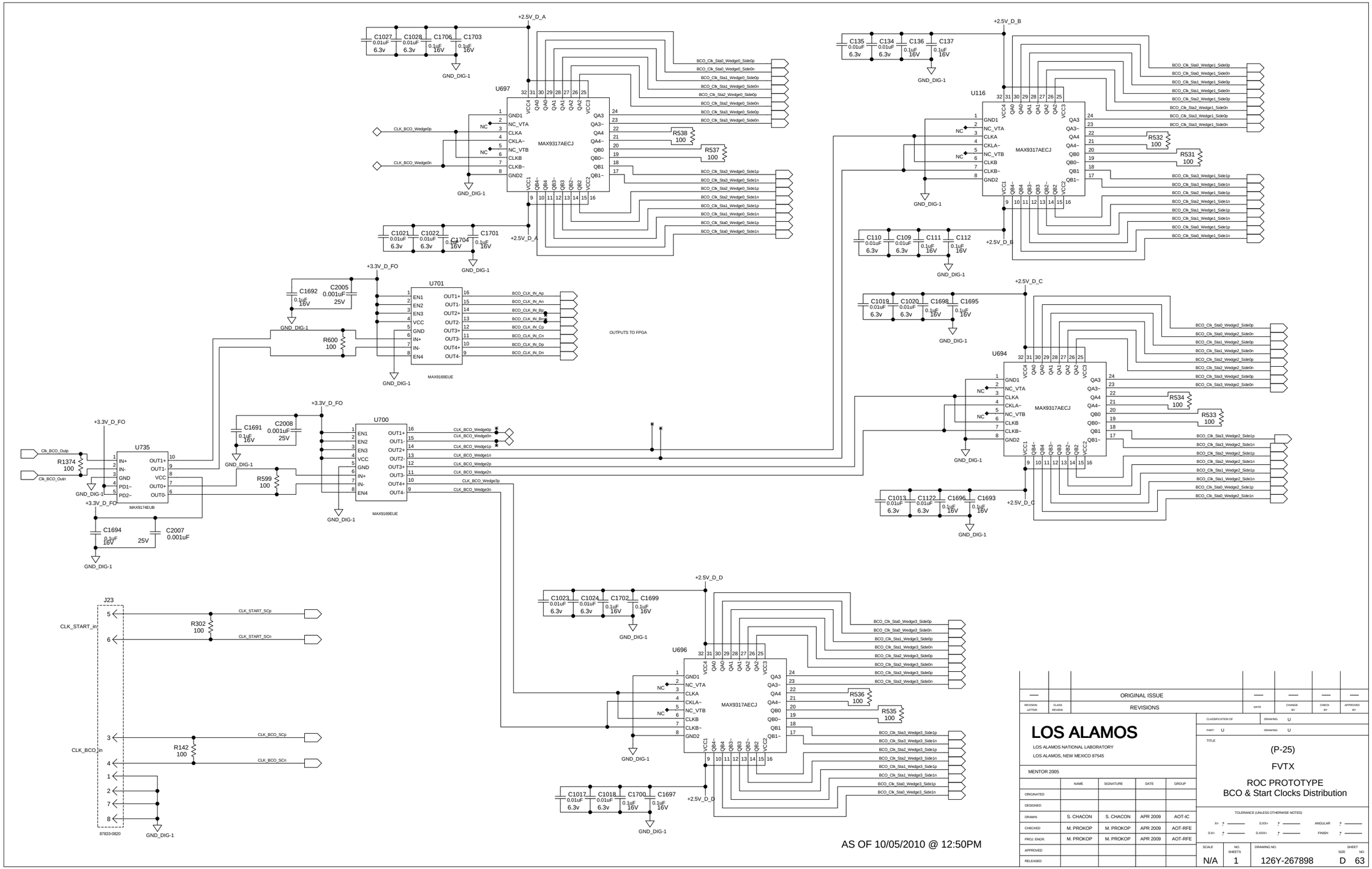

REVISION LETTER	CLASS REVIEW	REVISIONS	DATE	CHANGE BY	CHECK BY	APPROVED BY
—		ORIGINAL ISSUE	—	—	—	—

LOS ALAMOS

LOS ALAMOS NATIONAL LABORATORY
LOS ALAMOS, NEW MEXICO 87545

MENTOR 2005

	NAME	SIGNATURE	DATE	GROUP
ORIGINATED				
DESIGNED				
DRAWN	S. CHACON	S. CHACON	APR 2009	AOT-IC
CHECKED	M. PROKOP	M. PROKOP	APR 2009	AOT-RFE
PROJ. ENGR.	M. PROKOP	M. PROKOP	APR 2009	AOT-RFE
APPROVED				
RELEASED				

CLASSIFICATION OF: U
DRAWING: U
PART: U
DRAWING: U

TITLE

(P-25)

FVTX

ROC PROTOTYPE
BCO & Start Clocks Distribution

TOLERANCE (UNLESS OTHERWISE NOTED)
X= ± — 0.XX= ± — ANGULAR ± —
0.X= ± — 0.XXX= ± — FINISH ± —

SCALE	NO. SHEETS	DRAWING NO.	SIZE	SHEET NO.
N/A	1	126Y-267898	D	63

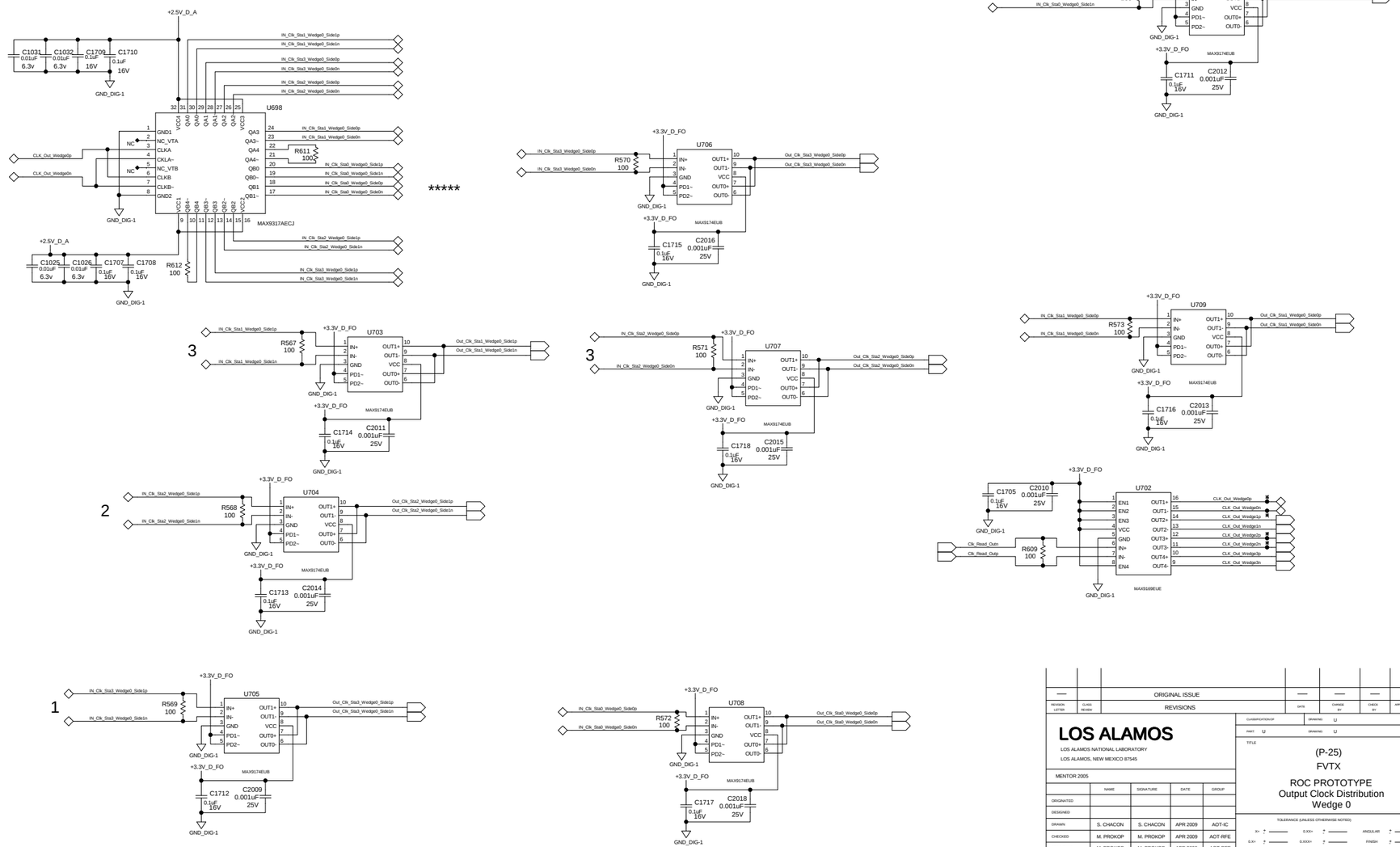

AS OF 10/05/2010 @ 12:50PM

REVISION LETTER	CLASS REVISION	REVISIONS	DATE	CHANGE BY	CHECK BY	APPROVED BY
—		ORIGINAL ISSUE	—	—	—	—

LOS ALAMOS

LOS ALAMOS NATIONAL LABORATORY
LOS ALAMOS, NEW MEXICO 87545

MENTOR 2005

	NAME	SIGNATURE	DATE	GROUP
ORIGINATED				
DESIGNED				
DRAWN	S. CHACON	S. CHACON	APR 2009	AOT-IC
CHECKED	M. PROKOP	M. PROKOP	APR 2009	AOT-RFE
PROJ. ENGR.	M. PROKOP	M. PROKOP	APR 2009	AOT-RFE
APPROVED				
RELEASED				

CLASSIFICATION/CIP: DRAWING: U
PART: U DRAWING: U

TITLE

(P-25)
FVTX

ROC PROTOTYPE
Output Clock Distribution
Wedge 0

TOLERANCE (UNLESS OTHERWISE NOTED)
X.X± — 0.XX± — ANGULAR ±
0.X± — 0.XXX± — FINISH ±

SCALE	NO. SHEETS	DRAWING NO.	SIZE	SHEET NO.
N/A	1	126Y-267898	D	64

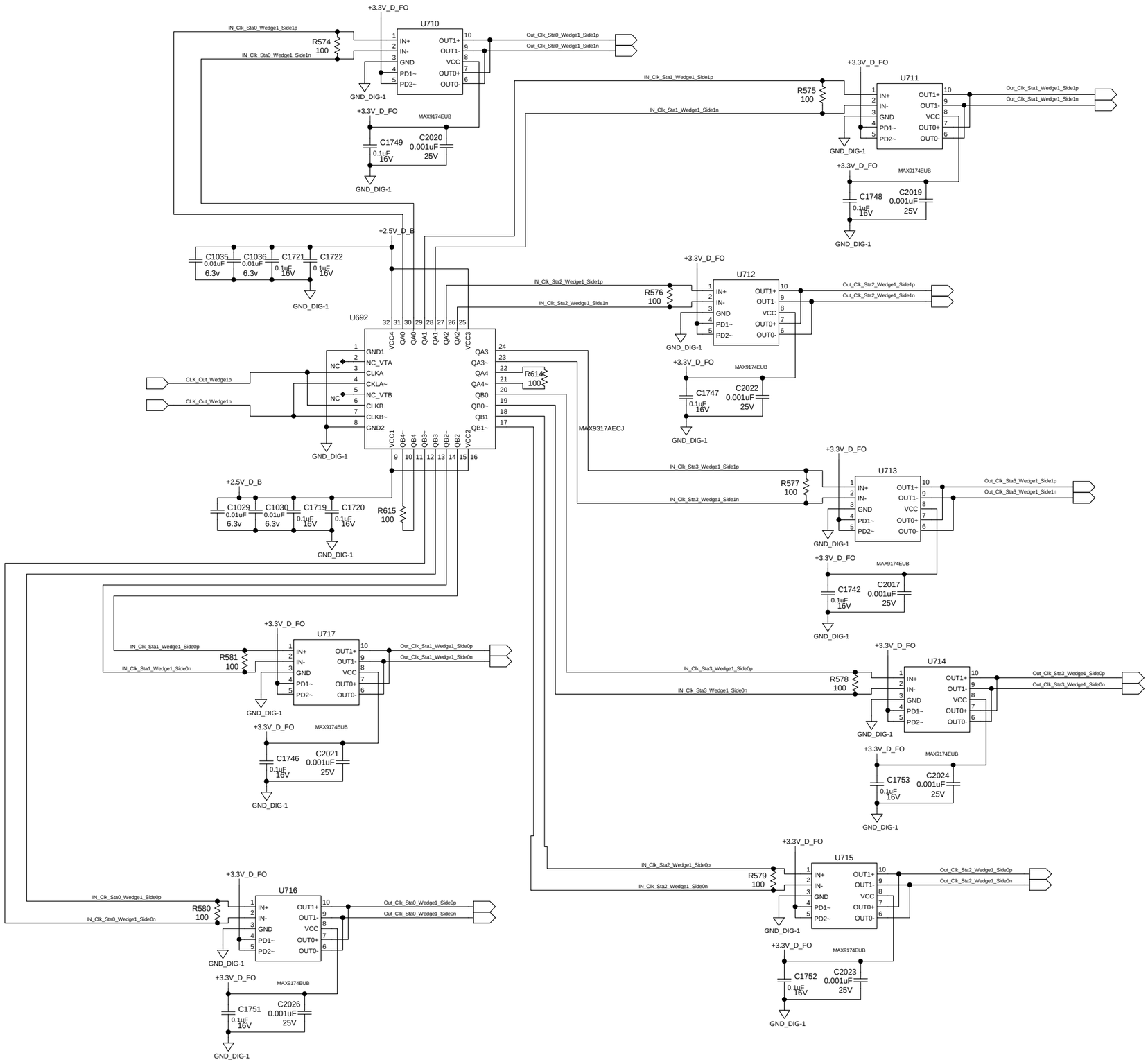

AS OF 10/05/2010 @ 12:50PM

REVISION LETTER	CLASS REVIEW	REVISIONS	DATE	CHANGE BY	CHECK BY	APPROVED BY
—		ORIGINAL ISSUE	—	—	—	—

LOS ALAMOS

LOS ALAMOS NATIONAL LABORATORY
LOS ALAMOS, NEW MEXICO 87545

MENTOR 2005

	NAME	SIGNATURE	DATE	GROUP
ORIGINATED				
DESIGNED				
DRAWN	S. CHACON	S. CHACON	APR 2009	AOT-IC
CHECKED	M. PROKOP	M. PROKOP	APR 2009	AOT-RFE
PROJ. ENGR.	M. PROKOP	M. PROKOP	APR 2009	AOT-RFE
APPROVED				
RELEASED				

CLASSIFICATION OF: DRAWING: U
PART: U DRAWING: U

TITLE

(P-25)
FVTX

ROC PROTOTYPE
Output Clock Distribution
Wedge 1

TOLERANCE (UNLESS OTHERWISE NOTED)
X= ± — 0.XX= ± — ANGULAR ± —
0.X= ± — 0.XXX= ± — FINISH ± —

SCALE	NO. SHEETS	DRAWING NO.	SIZE	SHEET NO.
N/A	1	126Y-267898	D	65

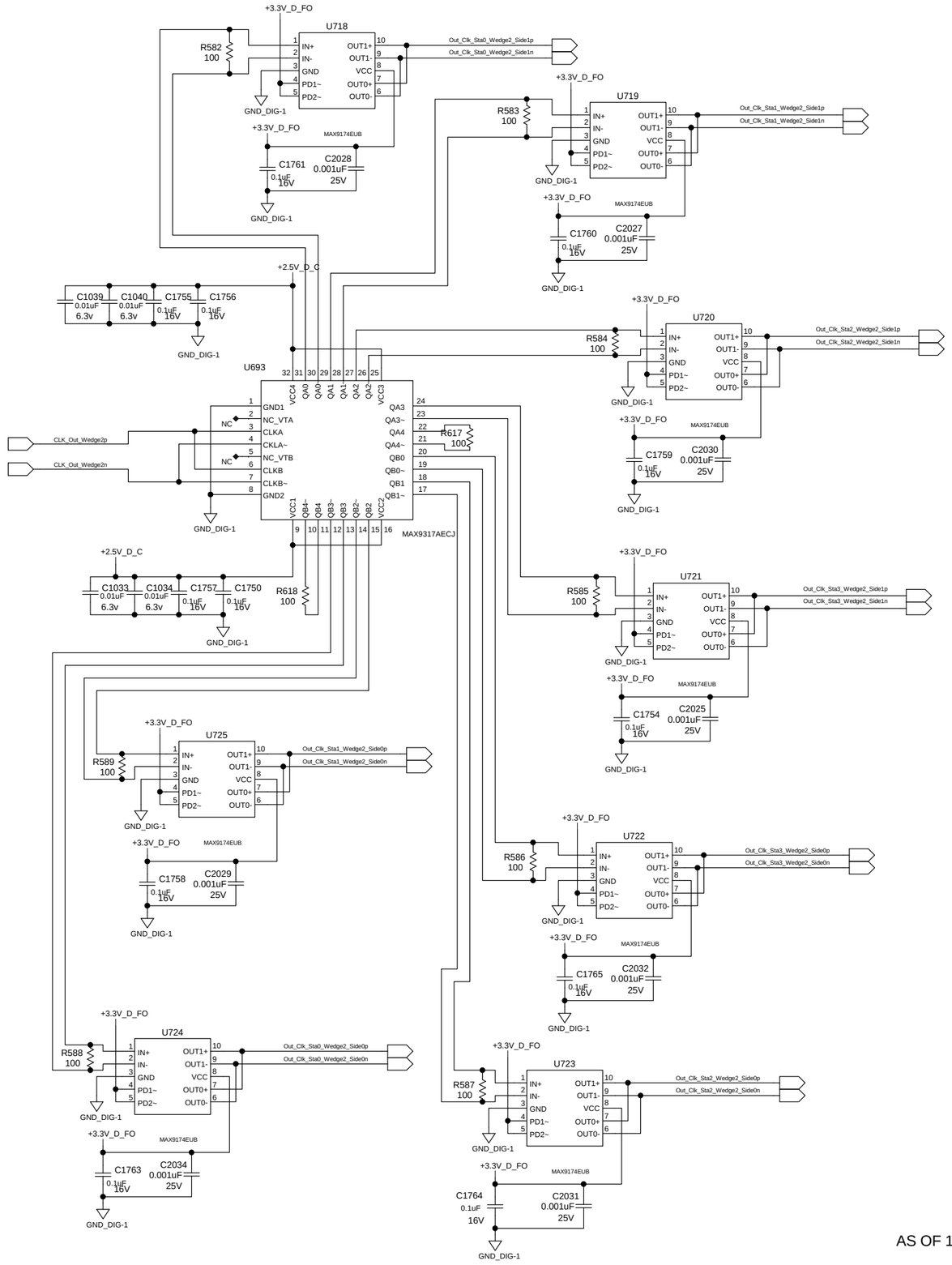

AS OF 10/05/2010 @ 12:50PM

REVISION LETTER	CLASS REVIEW	REVISIONS	DATE	CHANGE BY	CHECK BY	APPROVED BY
—		ORIGINAL ISSUE	—	—	—	—

LOS ALAMOS

LOS ALAMOS NATIONAL LABORATORY
LOS ALAMOS, NEW MEXICO 87545

MENTOR 2005

	NAME	SIGNATURE	DATE	GROUP
ORIGINATED				
DESIGNED				
DRAWN	S. CHACON	S. CHACON	APR 2009	AOT-IC
CHECKED	M. PROKOP	M. PROKOP	APR 2009	AOT-RFE
PROJ. ENGR.	M. PROKOP	M. PROKOP	APR 2009	AOT-RFE
APPROVED				
RELEASED				

CLASSIFICATION OF: DRAWING: U
PART: U DRAWING: U

TITLE:

(P-25)
FVTX

ROC PROTOTYPE
Output Clock Distribution
Wedge 2

TOLERANCE (UNLESS OTHERWISE NOTED)
X= ± — 0.XX= ± — ANGULAR ± —
0.XX= ± — 0.XXX= ± — FINISH ± —

SCALE	NO. SHEETS	DRAWING NO.	SIZE	SHEET NO.
N/A	1	126Y-267898	D	66

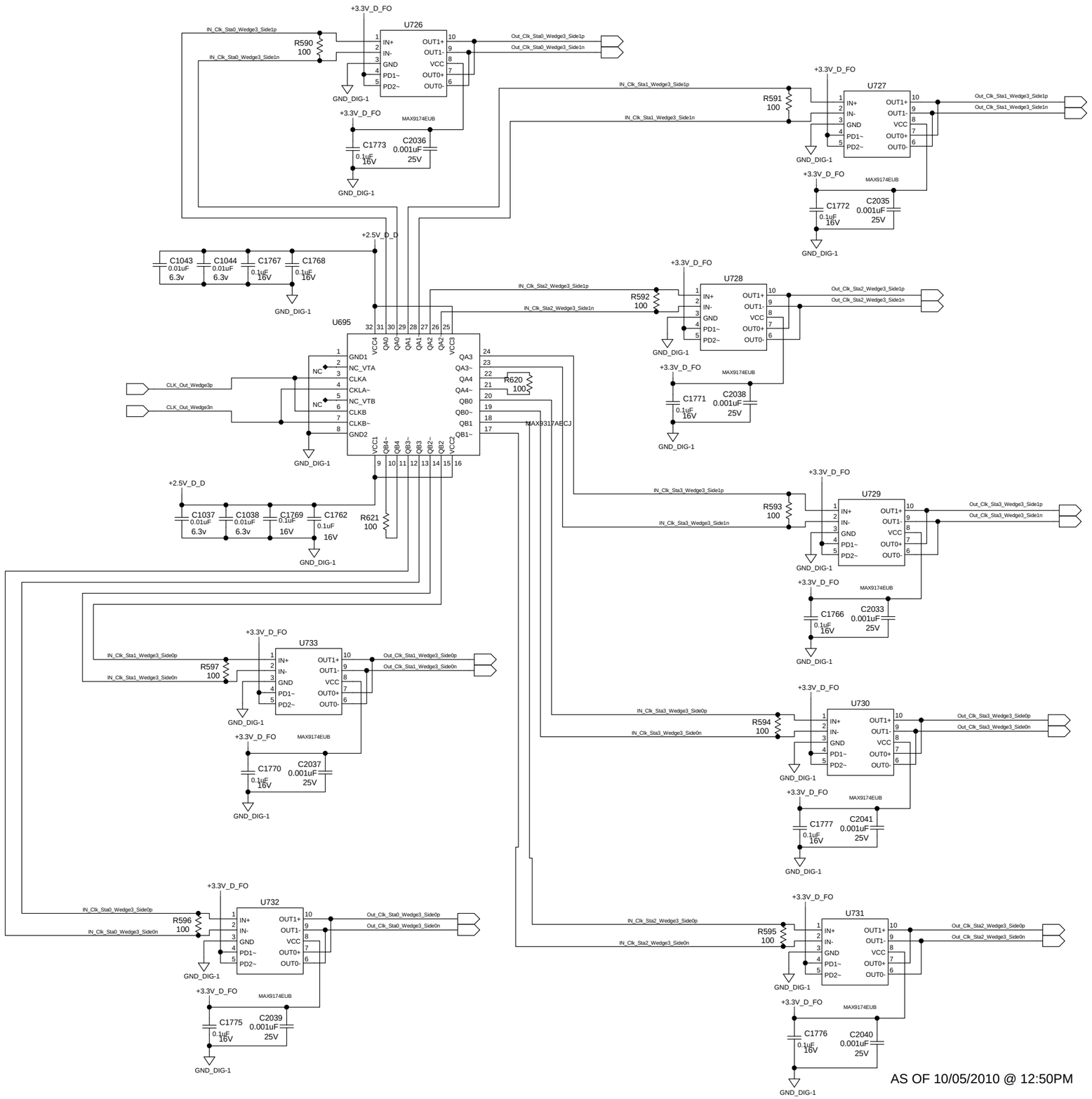

REVISION LETTER	CLASS REVIEW	REVISIONS	DATE	CHANGE BY	CHECK BY	APPROVED BY
—		ORIGINAL ISSUE	—	—	—	—

LOS ALAMOS

LOS ALAMOS NATIONAL LABORATORY
LOS ALAMOS, NEW MEXICO 87545

MENTOR 2005

	NAME	SIGNATURE	DATE	GROUP
ORIGINATED				
DESIGNED				
DRAWN	S. CHACON	S. CHACON	APR 2009	AOT-IC
CHECKED	M. PROKOP	M. PROKOP	APR 2009	AOT-RFE
PROJ. ENGR.	M. PROKOP	M. PROKOP	APR 2009	AOT-RFE
APPROVED				
RELEASED				

CLASSIFICATION OF: DRAWING: U
PART: U DRAWING: U

TITLE

(P-25)
FVTX
ROC PROTOTYPE
Output Clock Distribution
Wedge 3

TOLERANCE (UNLESS OTHERWISE NOTED)
X= ± — 0.XX= ± — ANGULAR ± —
0.X= ± — 0.XXX= ± — FINISH ± —

SCALE	NO. SHEETS	DRAWING NO.	SIZE	SHEET NO.
N/A	1	126Y-267898	D	67

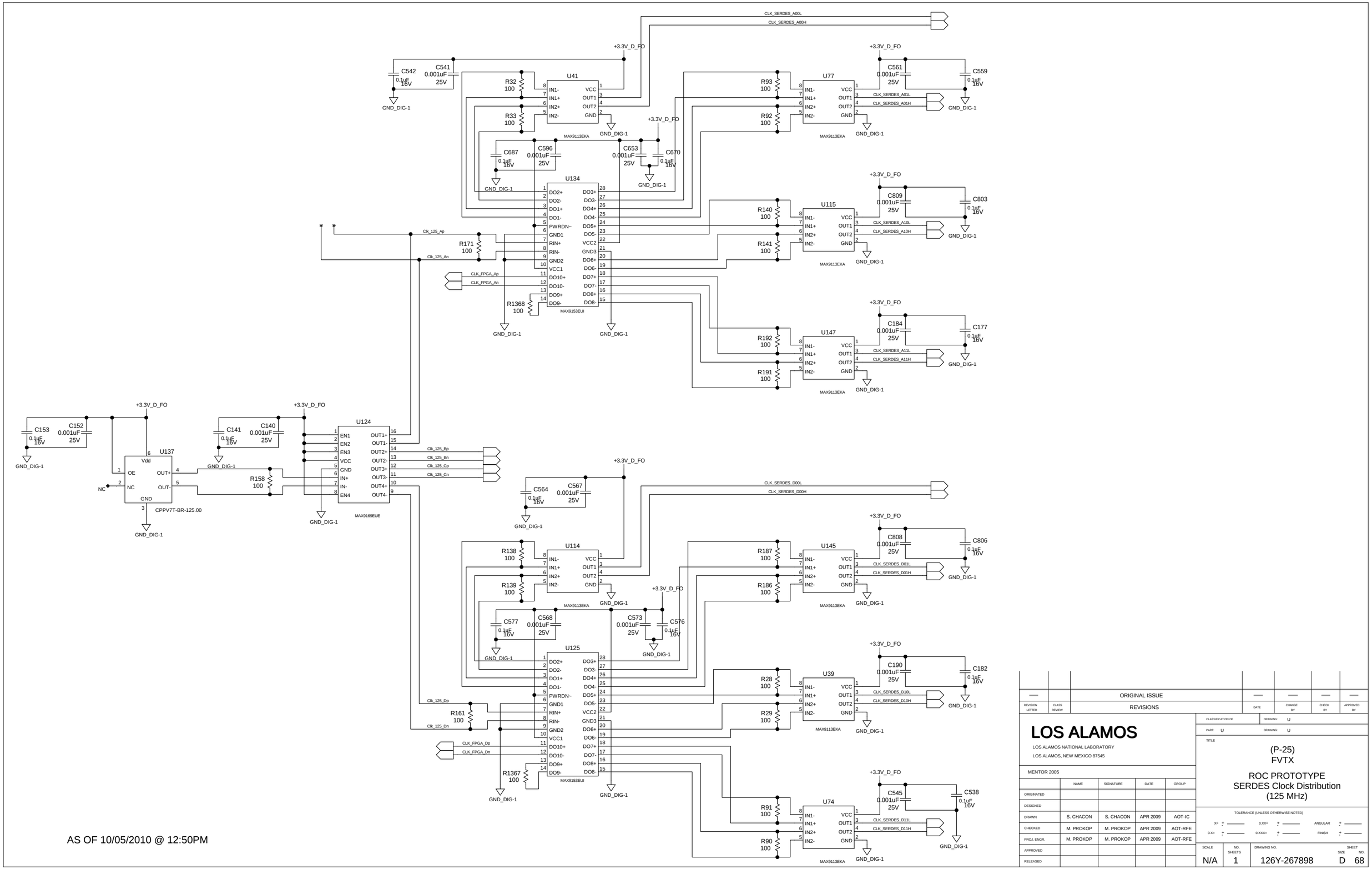

REVISION LETTER	CLASS REVISION	REVISIONS	DATE	CHANGE BY	CHECK BY	APPROVED BY
—		ORIGINAL ISSUE	—	—	—	—

LOS ALAMOS

LOS ALAMOS NATIONAL LABORATORY
LOS ALAMOS, NEW MEXICO 87545

MENTOR 2005

	NAME	SIGNATURE	DATE	GROUP
ORIGINATED				
DESIGNED				
DRAWN	S. CHACON	S. CHACON	APR 2009	AOT-IC
CHECKED	M. PROKOP	M. PROKOP	APR 2009	AOT-RFE
PROJ. ENGR.	M. PROKOP	M. PROKOP	APR 2009	AOT-RFE
APPROVED				
RELEASED				

CLASSIFICATION OF: DRAWING: U
PART: U DRAWING: U

TITLE

(P-25)
FVTX

ROC PROTOTYPE
SERDES Clock Distribution
(125 MHz)

TOLERANCE (UNLESS OTHERWISE NOTED)
X= ± — 0.XX= ± — ANGULAR ± —
0.X= ± — 0.XXX= ± — FINISH ± —

SCALE	NO. SHEETS	DRAWING NO.	SIZE	SHEET NO.
N/A	1	126Y-267898	D	68

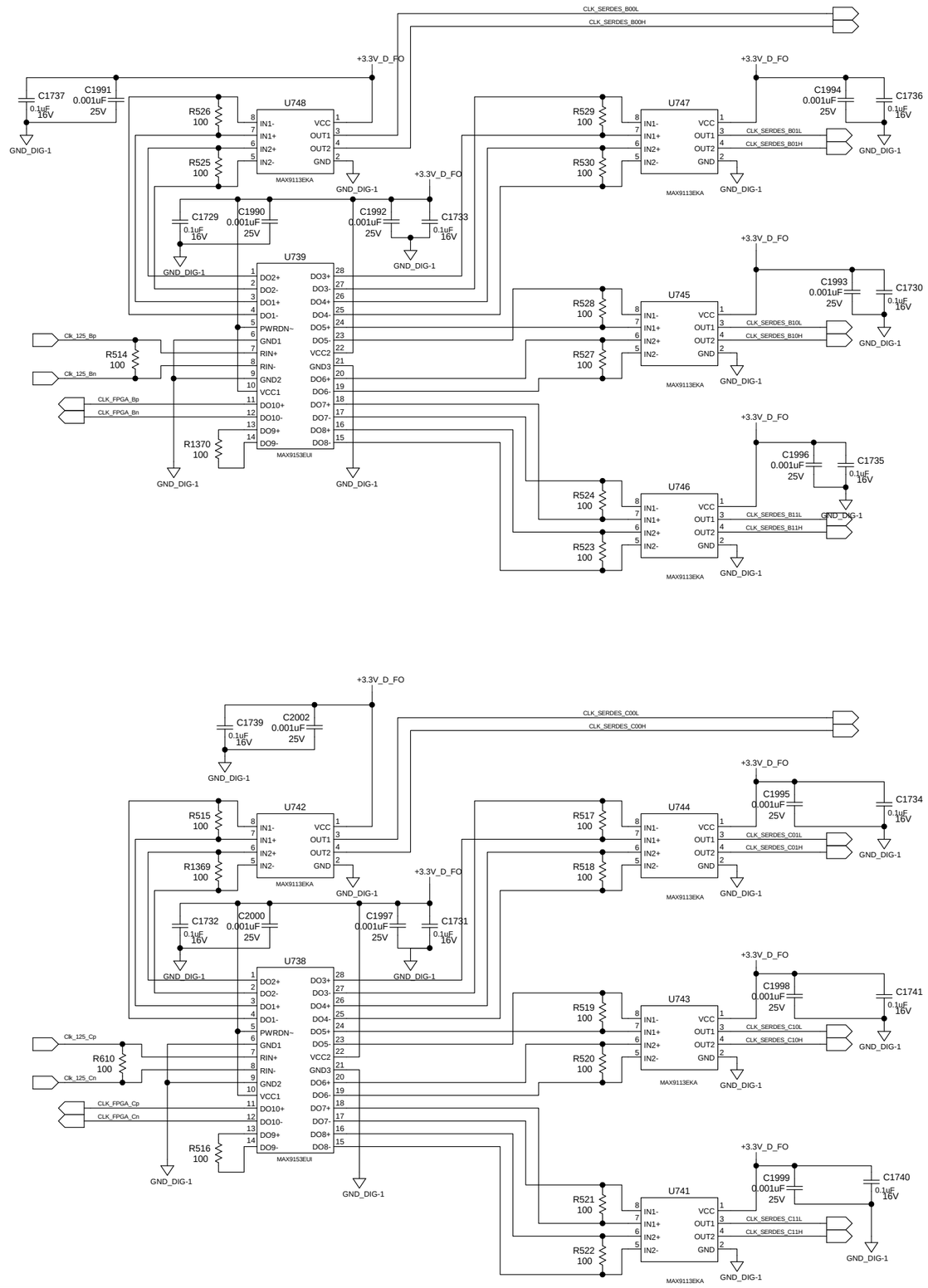

AS OF 10/05/2010 @ 12:50PM

REVISION LETTER	CLASS REVIEW	REVISIONS	DATE	CHANGE BY	CHECK BY	APPROVED BY
—		ORIGINAL ISSUE	—	—	—	—

LOS ALAMOS

LOS ALAMOS NATIONAL LABORATORY
LOS ALAMOS, NEW MEXICO 87545

MENTOR 2005

	NAME	SIGNATURE	DATE	GROUP
ORIGINATED				
DESIGNED				
DRAWN	S. CHACON	S. CHACON	APR 2009	AOT-IC
CHECKED	M. PROKOP	M. PROKOP	APR 2009	AOT-RFE
PROJ. ENGR.	M. PROKOP	M. PROKOP	APR 2009	AOT-RFE
APPROVED				
RELEASED				

CLASSIFICATION OF: DRAWING: U
PART: U DRAWING: U

TITLE

(P-25)
FVTX

ROC PROTOTYPE
SERDES Clock Distribution
(125 MHz)

TOLERANCE (UNLESS OTHERWISE NOTED)
X= ± ___ 0.XX= ± ___ ANGULAR ± ___
0.X= ± ___ 0.XXX= ± ___ FINISH ± ___

SCALE	NO. SHEETS	DRAWING NO.	SIZE	SHEET NO.
N/A	1	126Y-267898	D	69

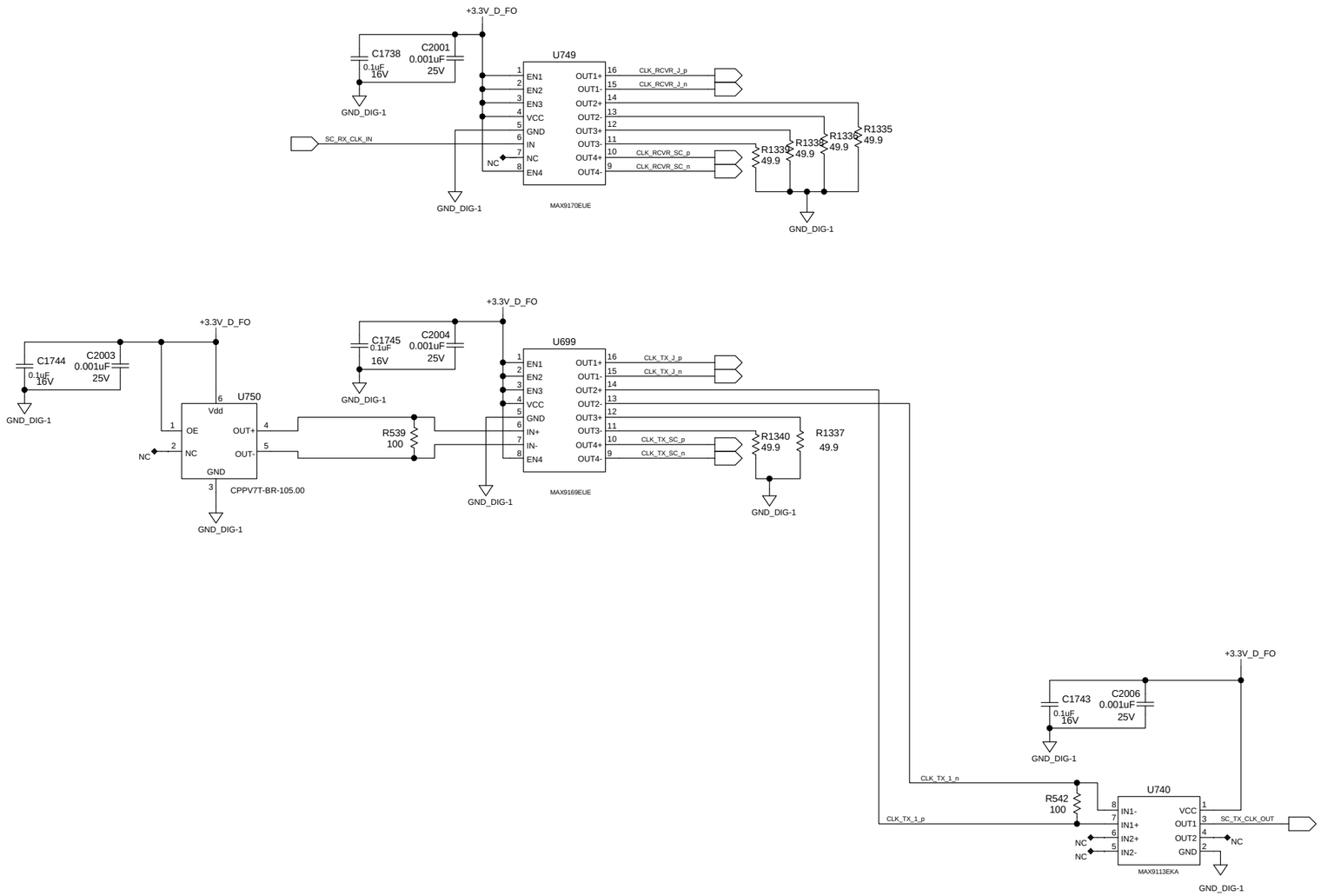

AS OF 10/05/2010 @ 12:50PM

REVISION LETTER	CLASS REVIEW	REVISIONS	DATE	CHANGE BY	CHECK BY	APPROVED BY
—		ORIGINAL ISSUE	—	—	—	—

LOS ALAMOS

LOS ALAMOS NATIONAL LABORATORY
LOS ALAMOS, NEW MEXICO 87545

MENTOR 2005

	NAME	SIGNATURE	DATE	GROUP
ORIGINATED				
DESIGNED				
DRAWN	S. CHACON	S. CHACON	APR 2009	AOT-IC
CHECKED	M. PROKOP	M. PROKOP	APR 2009	AOT-RFE
PROJ. ENGR.	M. PROKOP	M. PROKOP	APR 2009	AOT-RFE
APPROVED				
RELEASED				

CLASSIFICATION OF: DRAWING: U

PART: U DRAWING: U

TITLE

(P-25)
FVTX

ROC PROTOTYPE
Slow Controls/JTAG (105 MHz)
SERDES Clock Distribution

TOLERANCE (UNLESS OTHERWISE NOTED)

X= ± — 0.XX= ± — ANGULAR ± —
0.X= ± — 0.XXX= ± — FINISH ± —

SCALE	NO. SHEETS	DRAWING NO.	SIZE	SHEET NO.
N/A	1	126Y-267898	D	70

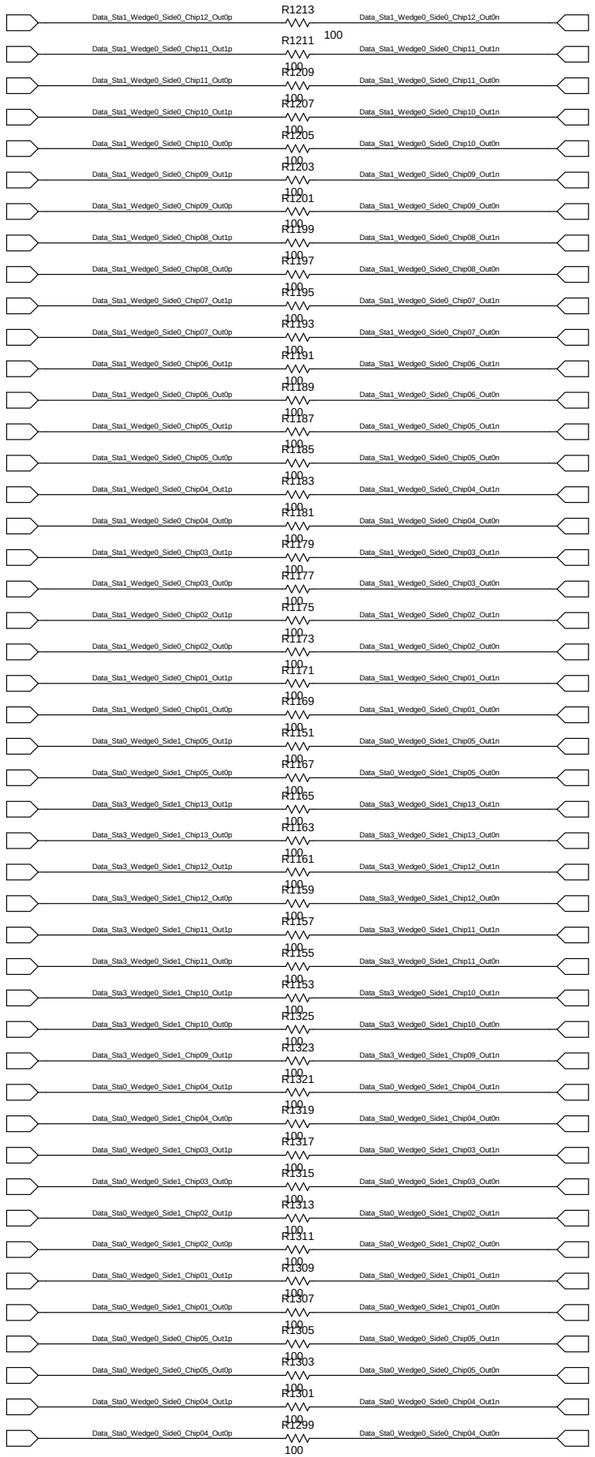

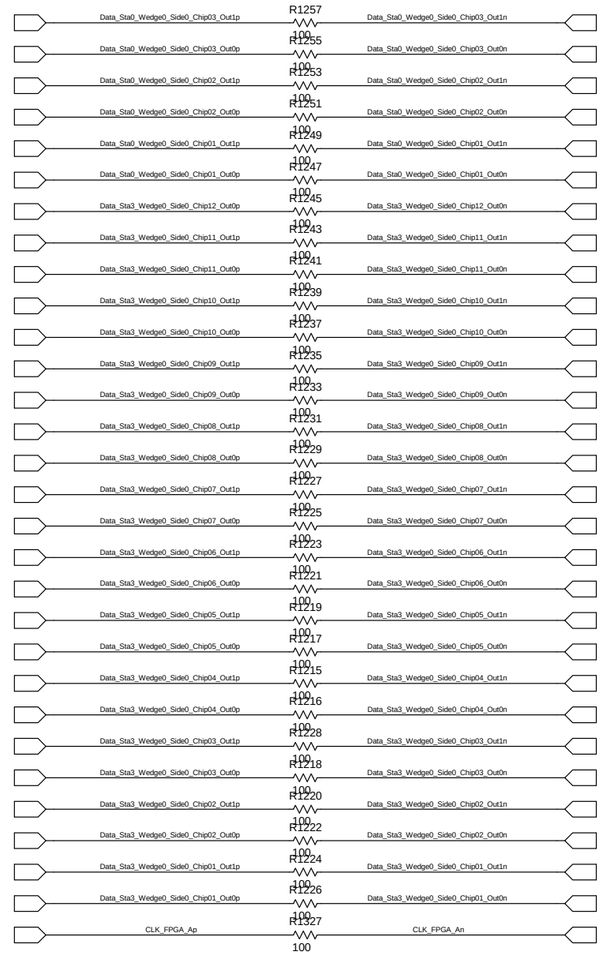

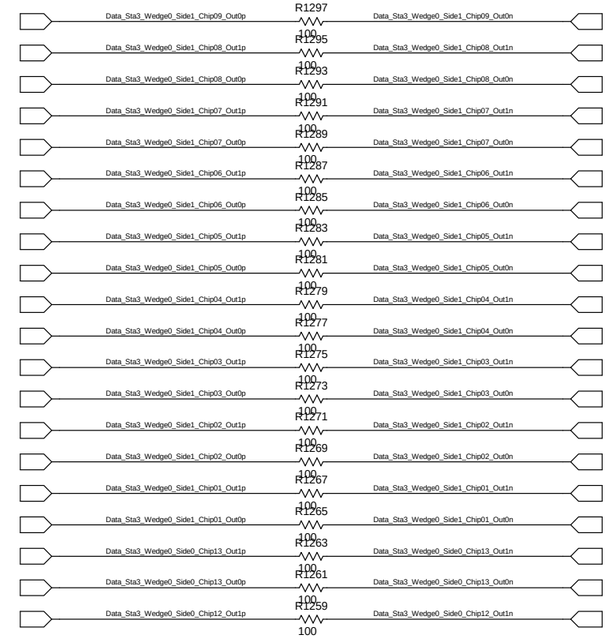

AS OF 10/05/2010 @ 12:50PM

REVISION LETTER	CLASS REVIEW	REVISIONS	DATE	CHANGE BY	CHECK BY	APPROVED BY
—		ORIGINAL ISSUE	—	—	—	—

LOS ALAMOS

LOS ALAMOS NATIONAL LABORATORY
LOS ALAMOS, NEW MEXICO 87545

MENTOR 2005

	NAME	SIGNATURE	DATE	GROUP
ORIGINATED				
DESIGNED				
DRAWN	S. CHACON	S. CHACON	APR 2009	AOT-IC
CHECKED	M. PROKOP	M. PROKOP	APR 2009	AOT-RFE
PROJ. ENGR.	M. PROKOP	M. PROKOP	APR 2009	AOT-RFE
APPROVED				
RELEASED				

CLASSIFICATION OF: DRAWING: U
PART: U DRAWING: U

TITLE

(P-25)

FVTX
ROC PROTOTYPE
LVDS Input Terminations
FPGA A

TOLERANCE (UNLESS OTHERWISE NOTED)
X= ± — 0.XX= ± — ANGULAR ± —
0.X= ± — 0.XXX= ± — FINISH ± —

SCALE	NO. SHEETS	DRAWING NO.	SIZE	SHEET NO.
N/A	1	126Y-267898	D	71

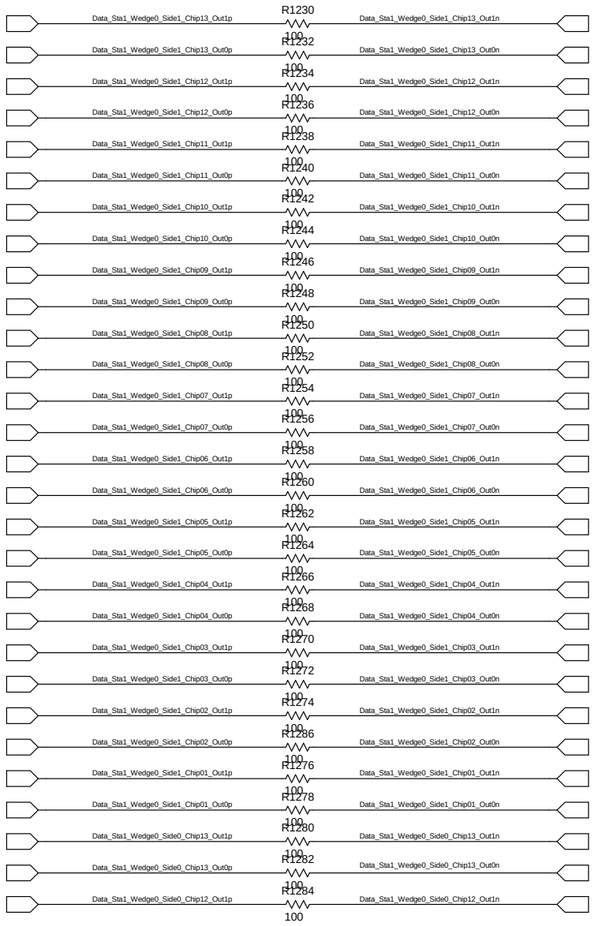

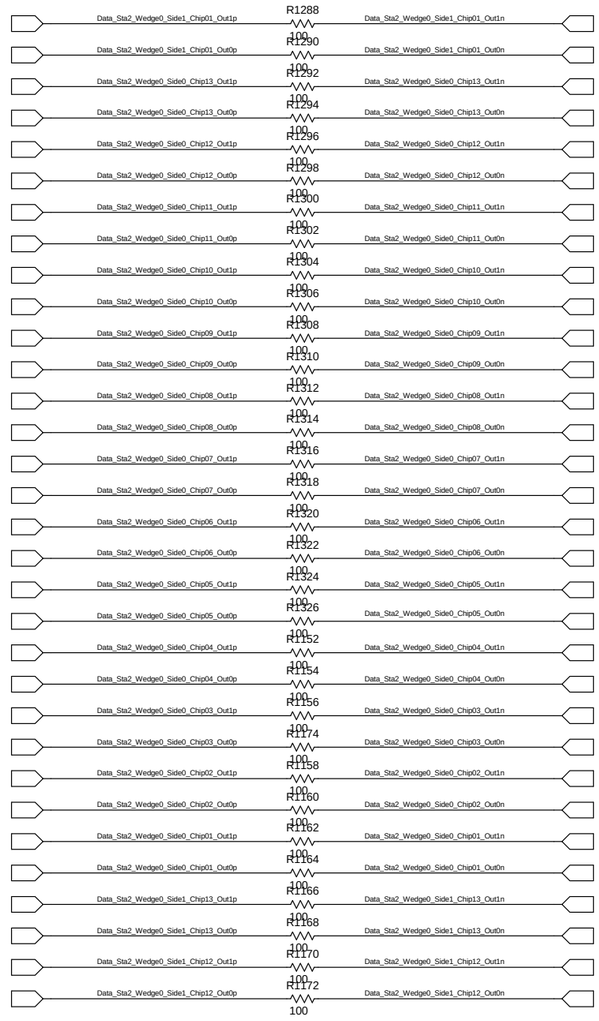

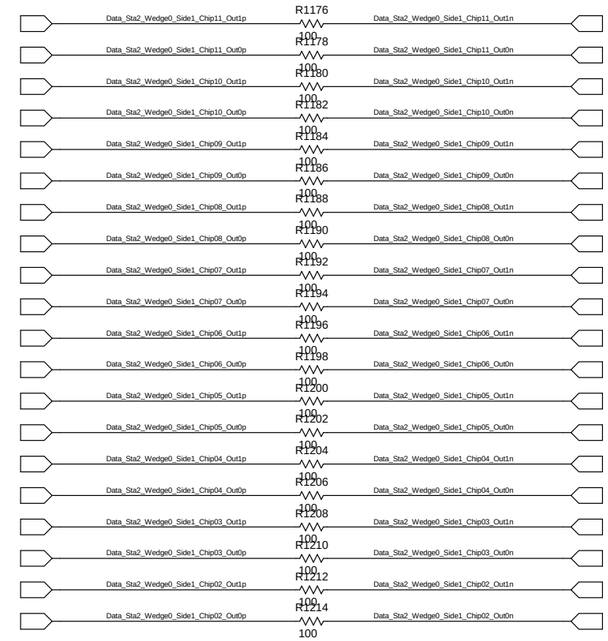

AS OF 10/05/2010 @ 12:50PM

REVISION LETTER	CLASS REVIEW	REVISIONS	DATE	CHANGE BY	CHECK BY	APPROVED BY
—		ORIGINAL ISSUE	—	—	—	—

LOS ALAMOS

LOS ALAMOS NATIONAL LABORATORY
LOS ALAMOS, NEW MEXICO 87545

MENTOR 2005

	NAME	SIGNATURE	DATE	GROUP
ORIGINATED				
DESIGNED				
DRAWN	S. CHACON	S. CHACON	APR 2009	AOT-IC
CHECKED	M. PROKOP	M. PROKOP	APR 2009	AOT-RFE
PROJ. ENGR.	M. PROKOP	M. PROKOP	APR 2009	AOT-RFE
APPROVED				
RELEASED				

CLASSIFICATION OF DRAWING: U
PART: U DRAWING: U

TITLE

(P-25)

FVTX
ROC PROTOTYPE
LVDS Input Terminations
FPGA A

TOLERANCE (UNLESS OTHERWISE NOTED)
X= ± — 0.XX= ± — ANGULAR ± —
0.X= ± — 0.XXX= ± — FINISH ± —

SCALE	NO. SHEETS	DRAWING NO.	SIZE	SHEET NO.
N/A	1	126Y-267898	D	72

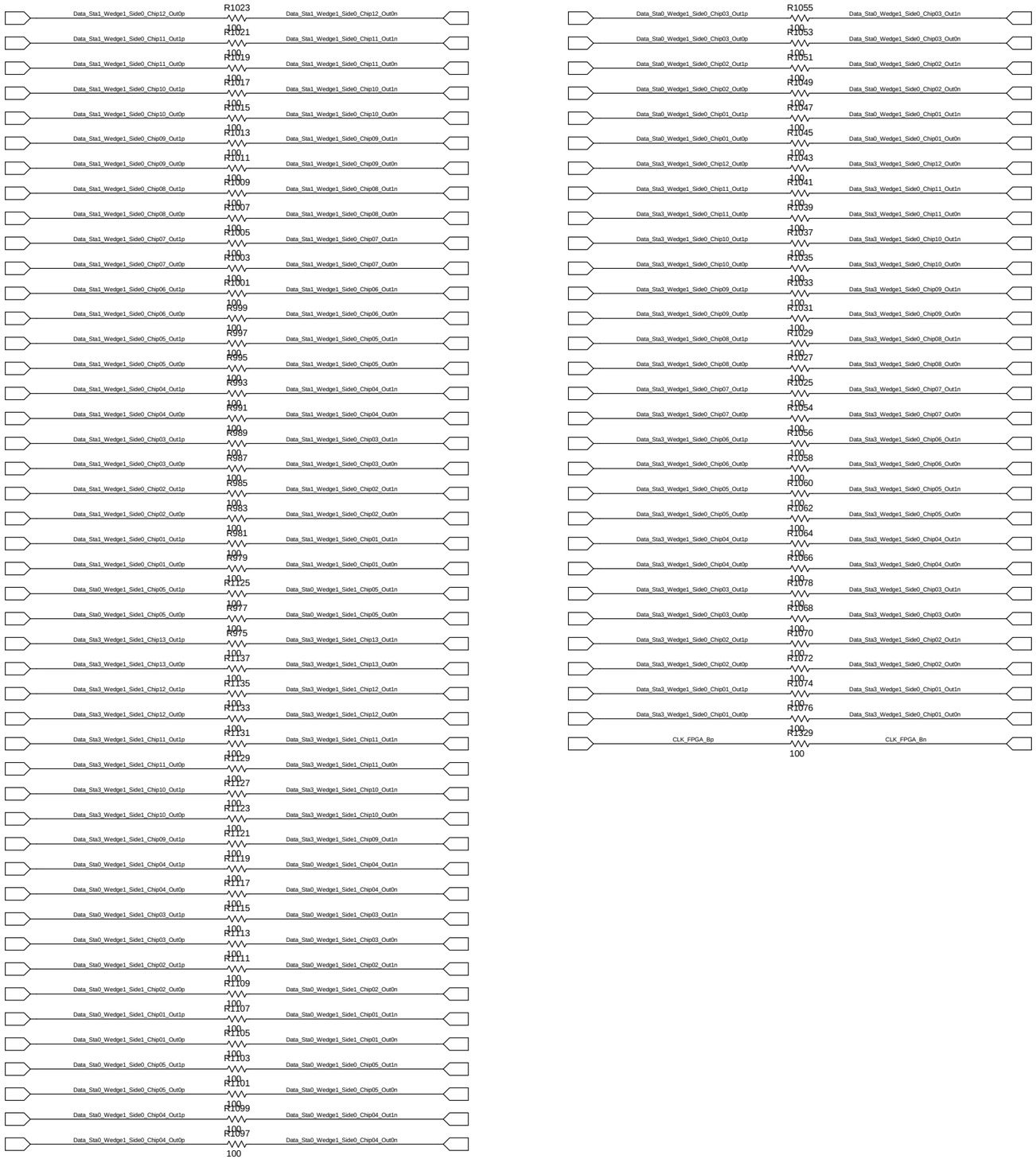

AS OF 10/05/2010 @ 12:50PM

REVISION LETTER	CLASS REVIEW	REVISIONS	DATE	CHANGE BY	CHECK BY	APPROVED BY
—		ORIGINAL ISSUE	—	—	—	—

LOS ALAMOS

LOS ALAMOS NATIONAL LABORATORY
LOS ALAMOS, NEW MEXICO 87545

MENTOR 2005

	NAME	SIGNATURE	DATE	GROUP
ORIGINATED				
DESIGNED				
DRAWN	S. CHACON	S. CHACON	APR 2009	AOT-IC
CHECKED	M. PROKOP	M. PROKOP	APR 2009	AOT-RFE
PROJ. ENGR.	M. PROKOP	M. PROKOP	APR 2009	AOT-RFE
APPROVED				
RELEASED				

CLASSIFICATION OF: DRAWING: U
PART: U DRAWING: U

TITLE

(P-25)

FVTX
ROC PROTOTYPE
LVDS Input Terminations
FPGA B

TOLERANCE (UNLESS OTHERWISE NOTED)
X= ± ___ 0.XX= ± ___ ANGULAR ± ___
0.X= ± ___ 0.XXX= ± ___ FINISH ± ___

SCALE	NO. SHEETS	DRAWING NO.	SIZE	SHEET NO.
N/A	1	126Y-267898	D	73

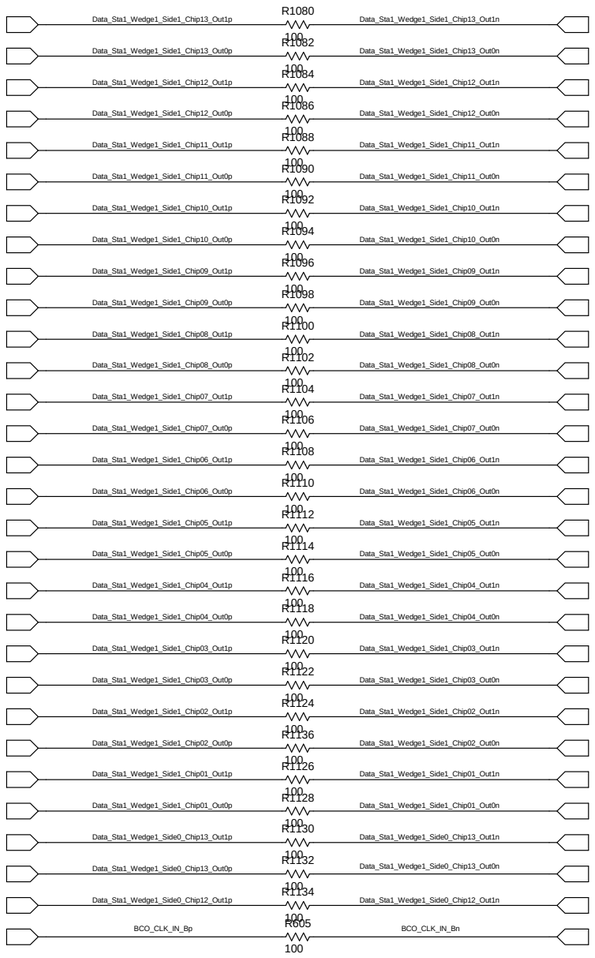

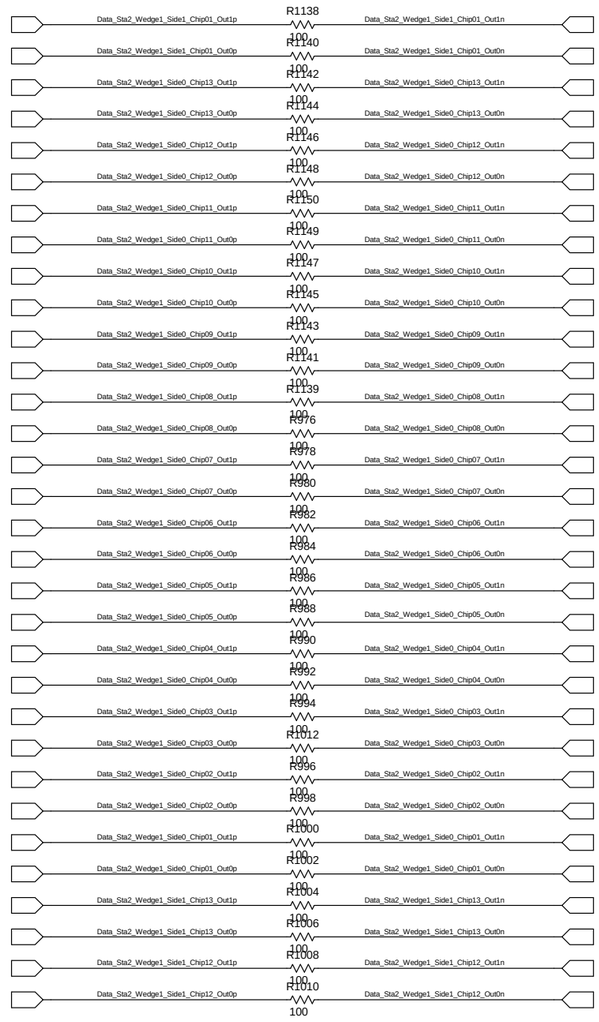

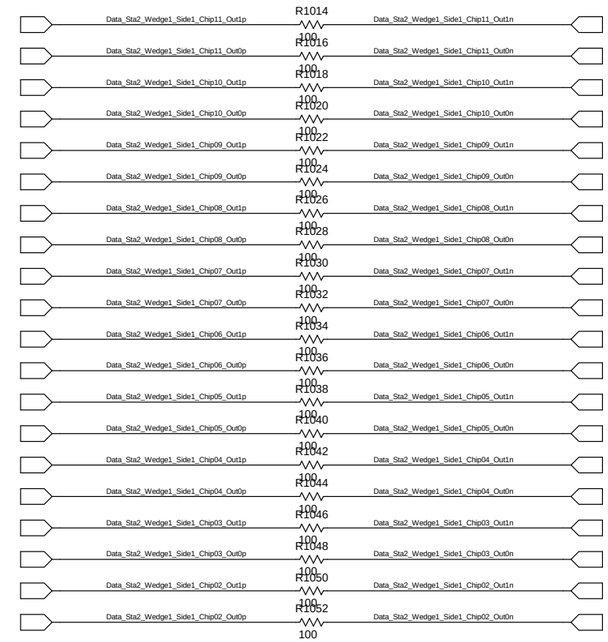

AS OF 10/05/2010 @ 12:50PM

REVISION LETTER	CLASS REVIEW	REVISIONS	DATE	CHANGE BY	CHECK BY	APPROVED BY
—		ORIGINAL ISSUE	—	—	—	—

LOS ALAMOS

LOS ALAMOS NATIONAL LABORATORY
LOS ALAMOS, NEW MEXICO 87545

MENTOR 2005

	NAME	SIGNATURE	DATE	GROUP
ORIGINATED				
DESIGNED				
DRAWN	S. CHACON	S. CHACON	APR 2009	AOT-IC
CHECKED	M. PROKOP	M. PROKOP	APR 2009	AOT-RFE
PROJ. ENGR.	M. PROKOP	M. PROKOP	APR 2009	AOT-RFE
APPROVED				
RELEASED				

CLASSIFICATION OF DRAWING: U
PART: U DRAWING: U

TITLE

(P-25)

FVTX
ROC PROTOTYPE
LVDS Input Terminations
FPGA B

TOLERANCE (UNLESS OTHERWISE NOTED)
X= ± — 0.XX= ± — ANGULAR ± —
0.X= ± — 0.XXX= ± — FINISH ± —

SCALE	NO. SHEETS	DRAWING NO.	SIZE	SHEET NO.
N/A	1	126Y-267898	D	74

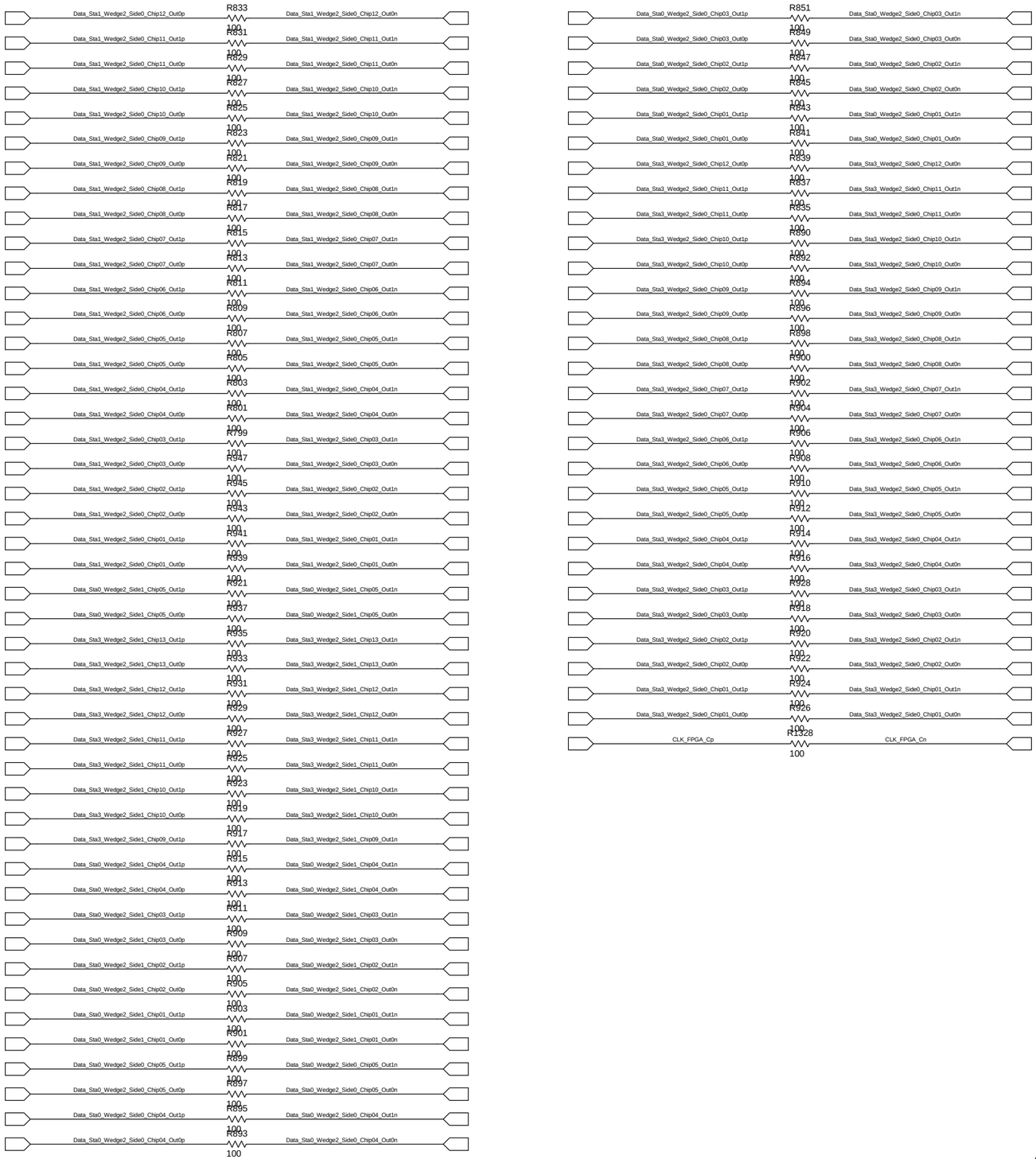

AS OF 10/05/2010 @ 12:50PM

REVISION LETTER	CLASS REVIEW	REVISIONS	DATE	CHANGE BY	CHECK BY	APPROVED BY
—		ORIGINAL ISSUE	—	—	—	—

LOS ALAMOS

LOS ALAMOS NATIONAL LABORATORY
LOS ALAMOS, NEW MEXICO 87545

MENTOR 2005

	NAME	SIGNATURE	DATE	GROUP
ORIGINATED				
DESIGNED				
DRAWN	S. CHACON	S. CHACON	APR 2009	AOT-IC
CHECKED	M. PROKOP	M. PROKOP	APR 2009	AOT-RFE
PROJ. ENGR.	M. PROKOP	M. PROKOP	APR 2009	AOT-RFE
APPROVED				
RELEASED				

CLASSIFICATION OF: DRAWING: U
PART: U DRAWING: U

TITLE

(P-25)

FVTX
ROC PROTOTYPE
LVDS Input Terminations
FPGA C

TOLERANCE (UNLESS OTHERWISE NOTED)
X= ± ___ 0.XX= ± ___ ANGULAR ± ___
0.X= ± ___ 0.XXX= ± ___ FINISH ± ___

SCALE	NO. SHEETS	DRAWING NO.	SIZE	SHEET NO.
N/A	1	126Y-267898	D	75

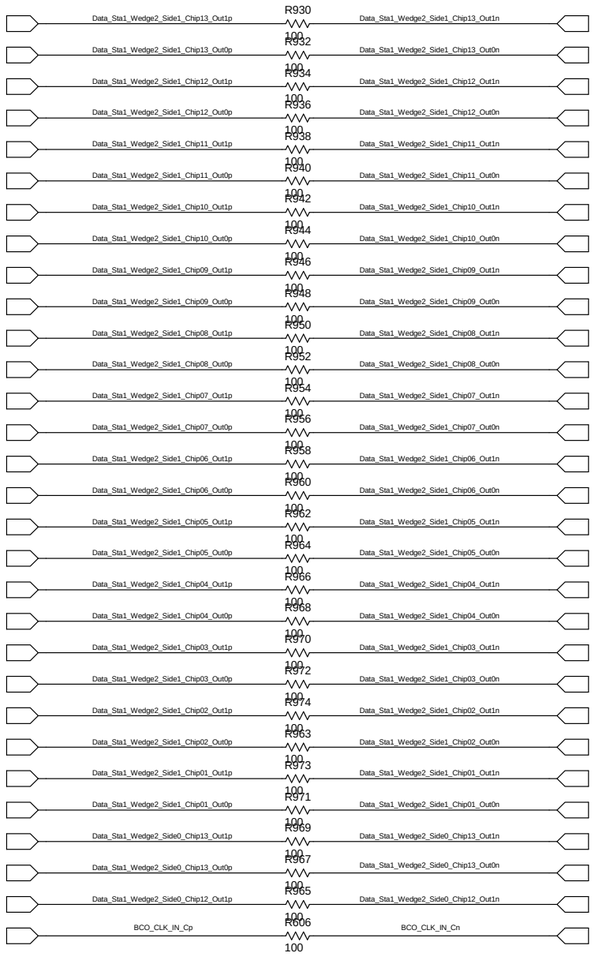

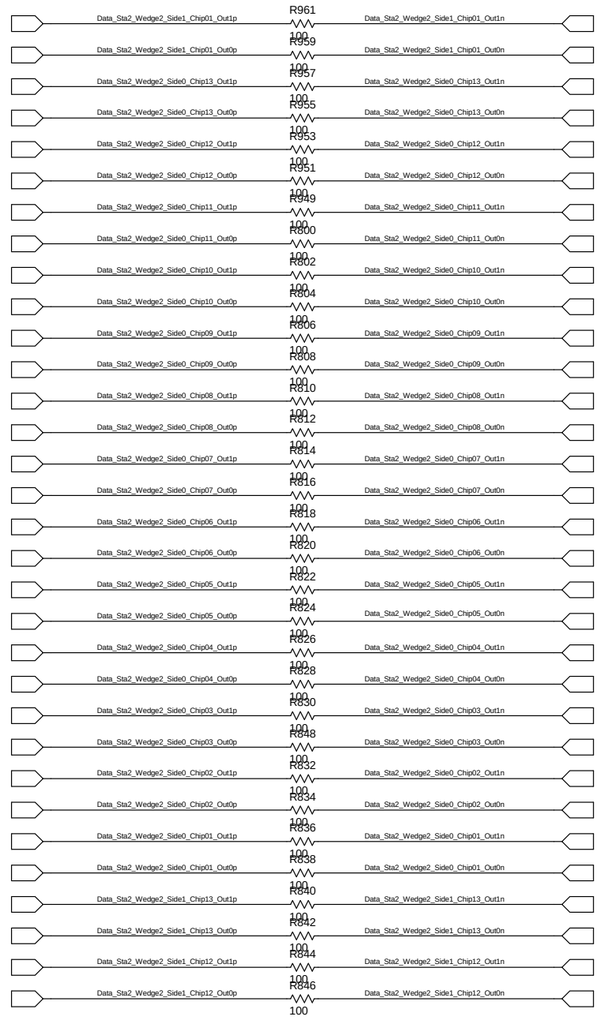

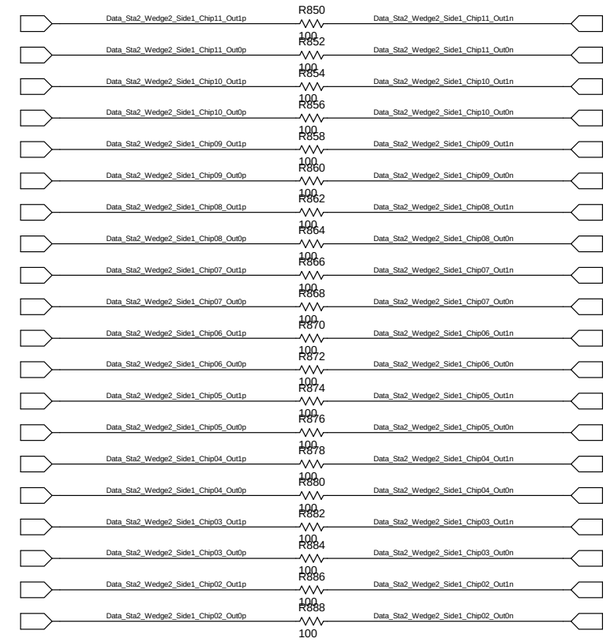

AS OF 10/05/2010 @ 12:50PM

REVISION LETTER	CLASS REVIEW	REVISIONS	DATE	CHANGE BY	CHECK BY	APPROVED BY
—		ORIGINAL ISSUE	—	—	—	—

LOS ALAMOS

LOS ALAMOS NATIONAL LABORATORY
LOS ALAMOS, NEW MEXICO 87545

MENTOR 2005

	NAME	SIGNATURE	DATE	GROUP
ORIGINATED				
DESIGNED				
DRAWN	S. CHACON	S. CHACON	APR 2009	AOT-IC
CHECKED	M. PROKOP	M. PROKOP	APR 2009	AOT-RFE
PROJ. ENGR.	M. PROKOP	M. PROKOP	APR 2009	AOT-RFE
APPROVED				
RELEASED				

CLASSIFICATION OF: DRAWING: U
PART: U DRAWING: U

TITLE

(P-25)

FVTX
ROC PROTOTYPE
LVDS Input Terminations
FPGA C

TOLERANCE (UNLESS OTHERWISE NOTED)
X= ± — 0.XX= ± — ANGULAR ± —
0.X= ± — 0.XXX= ± — FINISH ± —

SCALE	NO. SHEETS	DRAWING NO.	SIZE	SHEET NO.
N/A	1	126Y-267898	D	76

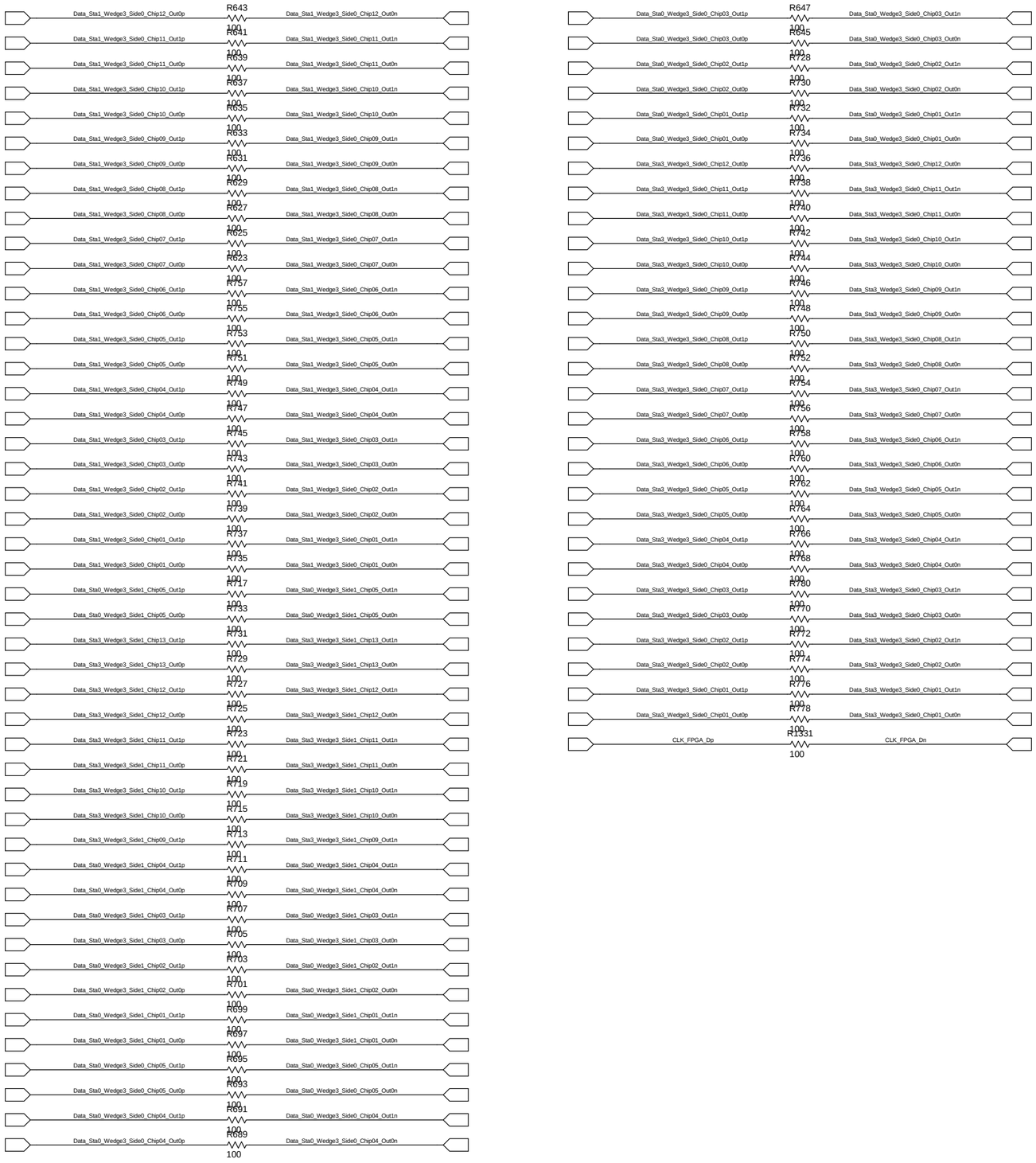

AS OF 10/05/2010 @ 12:50PM

REVISION LETTER	CLASS REVIEW	REVISIONS	DATE	CHANGE BY	CHECK BY	APPROVED BY
—		ORIGINAL ISSUE	—	—	—	—

LOS ALAMOS

LOS ALAMOS NATIONAL LABORATORY
LOS ALAMOS, NEW MEXICO 87545

MENTOR 2005

	NAME	SIGNATURE	DATE	GROUP
ORIGINATED				
DESIGNED				
DRAWN	S. CHACON	S. CHACON	APR 2009	AOT-IC
CHECKED	M. PROKOP	M. PROKOP	APR 2009	AOT-RFE
PROJ. ENGR.	M. PROKOP	M. PROKOP	APR 2009	AOT-RFE
APPROVED				
RELEASED				

CLASSIFICATION OF: DRAWING: U
PART: U DRAWING: U

TITLE

(P-25)

FVTX
ROC PROTOTYPE
LVDS Input Terminations
FPGA D

TOLERANCE (UNLESS OTHERWISE NOTED)
X= ± — 0.XX= ± — ANGULAR ± —
0.X= ± — 0.XXX= ± — FINISH ± —

SCALE	NO. SHEETS	DRAWING NO.	SIZE	SHEET NO.
N/A	1	126Y-267898	D	77

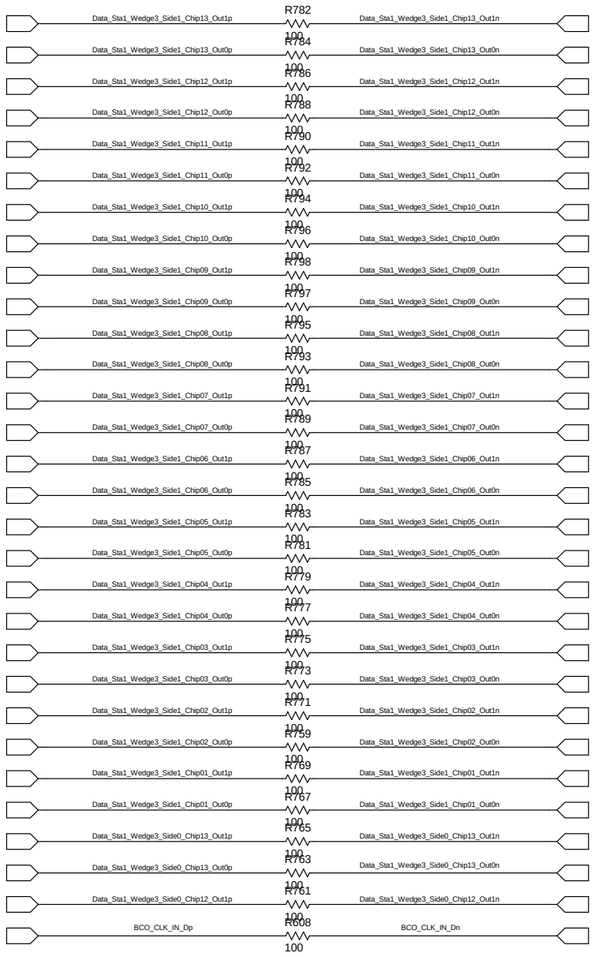

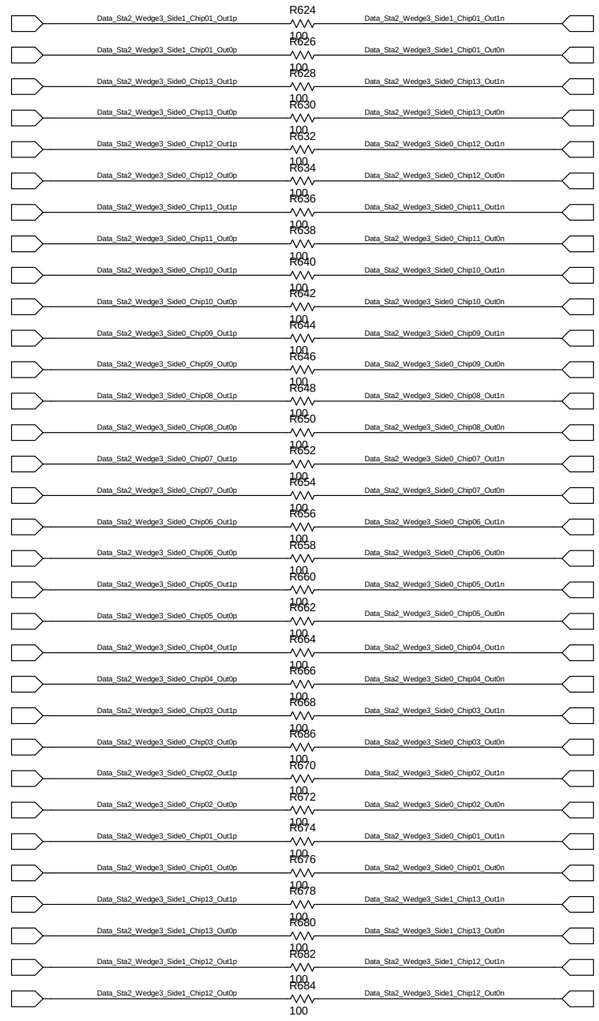

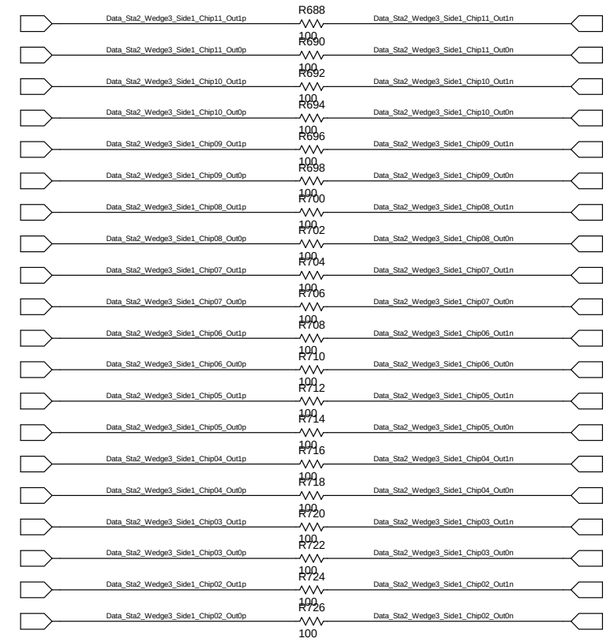

AS OF 10/05/2010 @ 12:50PM

REVISION LETTER	CLASS REVIEW	REVISIONS	DATE	CHANGE BY	CHECK BY	APPROVED BY
—		ORIGINAL ISSUE	—	—	—	—

LOS ALAMOS

LOS ALAMOS NATIONAL LABORATORY
LOS ALAMOS, NEW MEXICO 87545

MENTOR 2005

	NAME	SIGNATURE	DATE	GROUP
ORIGINATED				
DESIGNED				
DRAWN	S. CHACON	S. CHACON	APR 2009	AOT-IC
CHECKED	M. PROKOP	M. PROKOP	APR 2009	AOT-RFE
PROJ. ENGR.	M. PROKOP	M. PROKOP	APR 2009	AOT-RFE
APPROVED				
RELEASED				

CLASSIFICATION OF DRAWING: U
PART: U DRAWING: U

TITLE

(P-25)

FVTX
ROC PROTOTYPE
LVDS Input Terminations
FPGA D

TOLERANCE (UNLESS OTHERWISE NOTED)
X= ± — 0.XX= ± — ANGULAR ± —
0.X= ± — 0.XXX= ± — FINISH ± —

SCALE	NO. SHEETS	DRAWING NO.	SIZE	SHEET NO.
N/A	1	126Y-267898	D	78

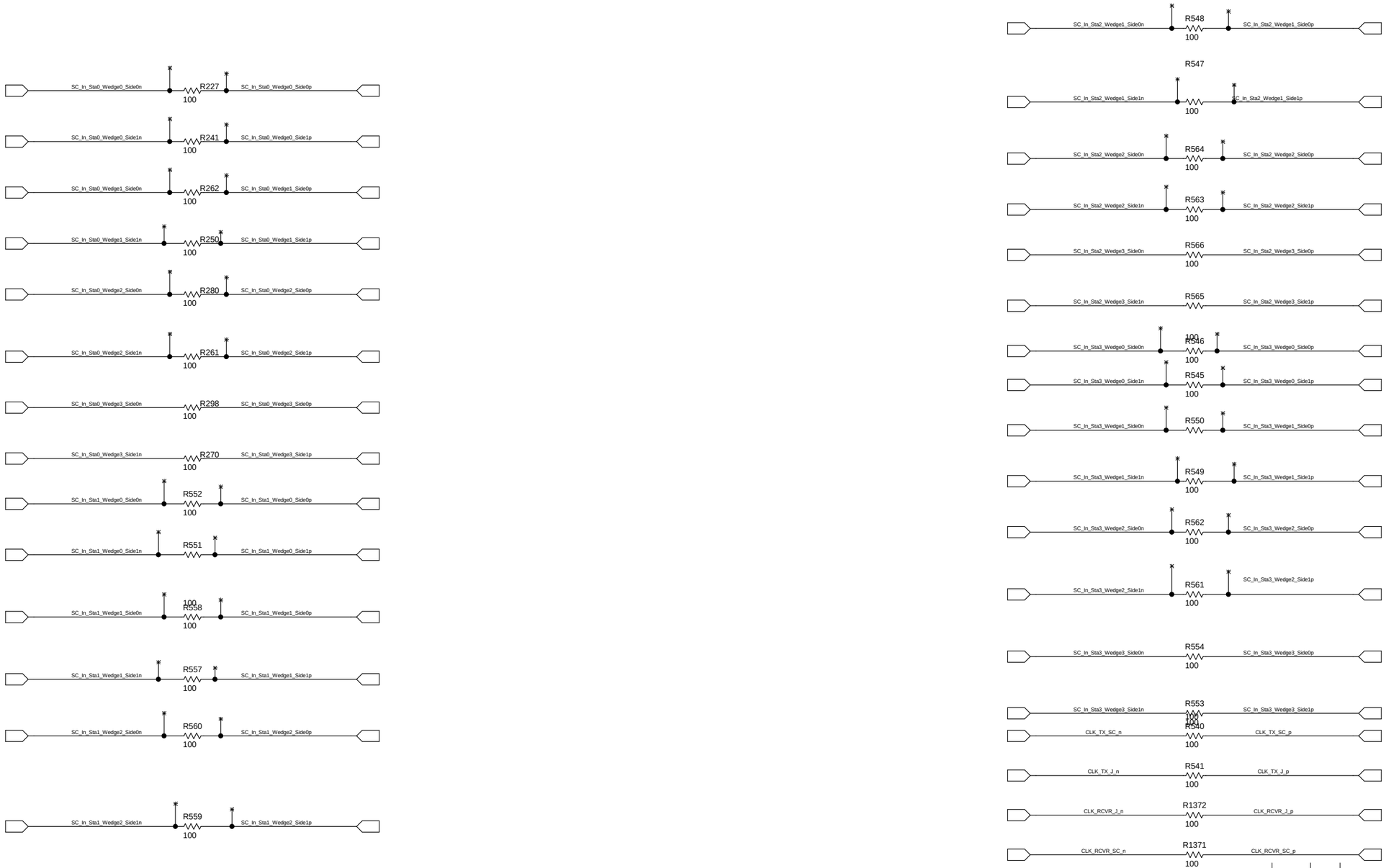

AS OF 10/05/2010 @ 12:50PM

REVISION LETTER	CLASS REVIEW	REVISIONS	DATE	CHANGE BY	CHECK BY	APPROVED BY
—		ORIGINAL ISSUE	—	—	—	—

LOS ALAMOS

LOS ALAMOS NATIONAL LABORATORY
LOS ALAMOS, NEW MEXICO 87545

MENTOR 2005

	NAME	SIGNATURE	DATE	GROUP
ORIGINATED				
DESIGNED				
DRAWN	S. CHACON	S. CHACON	APR 2009	AOT-IC
CHECKED	M. PROKOP	M. PROKOP	APR 2009	AOT-RFE
PROJ. ENGR.	M. PROKOP	M. PROKOP	APR 2009	AOT-RFE
APPROVED				
RELEASED				

CLASSIFICATION OF DRAWING: U
PART: U DRAWING: U

TITLE
(P-25)
FVTX
ROC PROTOTYPE
LVDS Input Terminations
Slow Controls FPGA

TOLERANCE (UNLESS OTHERWISE NOTED)
X= ± — 0.XX= ± — ANGULAR ± —
0.X= ± — 0.XXX= ± — FINISH ±

SCALE	NO. SHEETS	DRAWING NO.	SIZE	SHEET NO.
N/A	1	126Y-267898	D	79

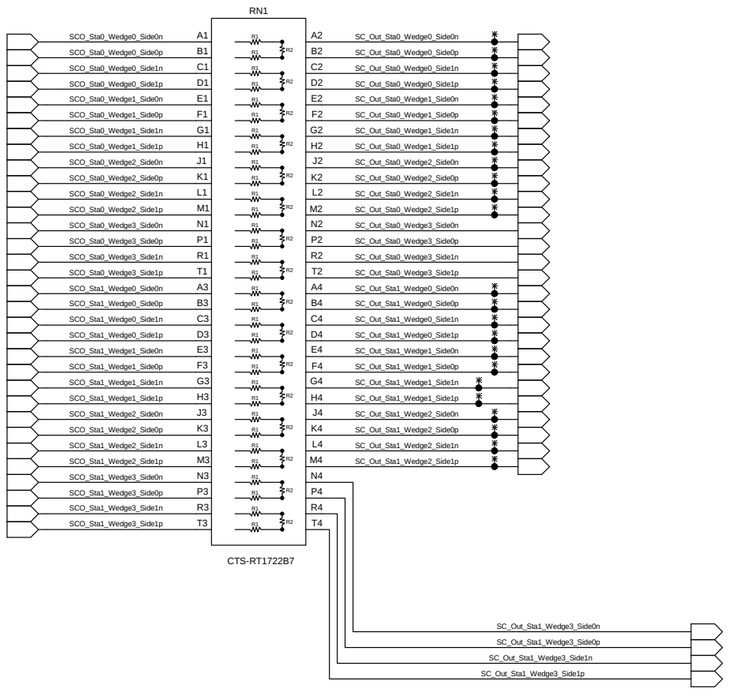

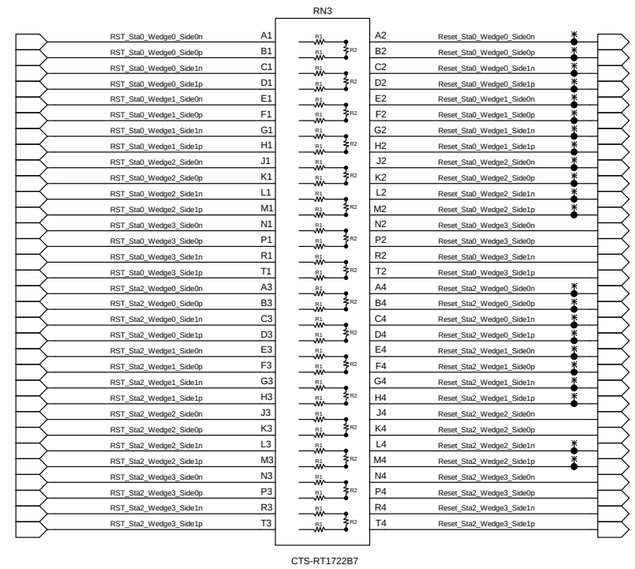

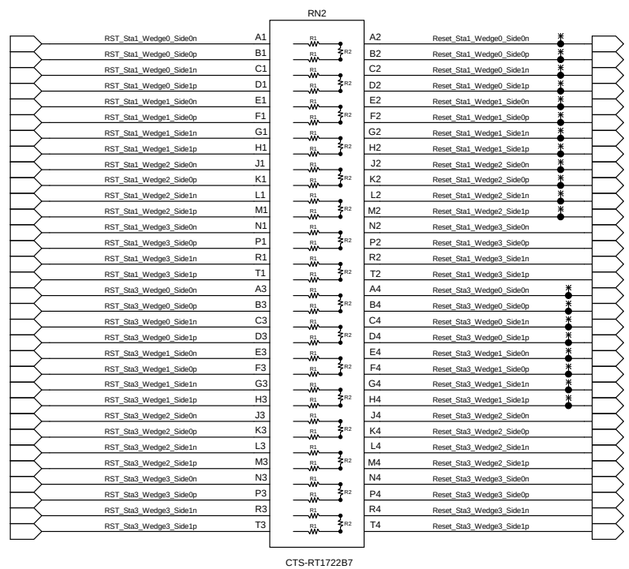

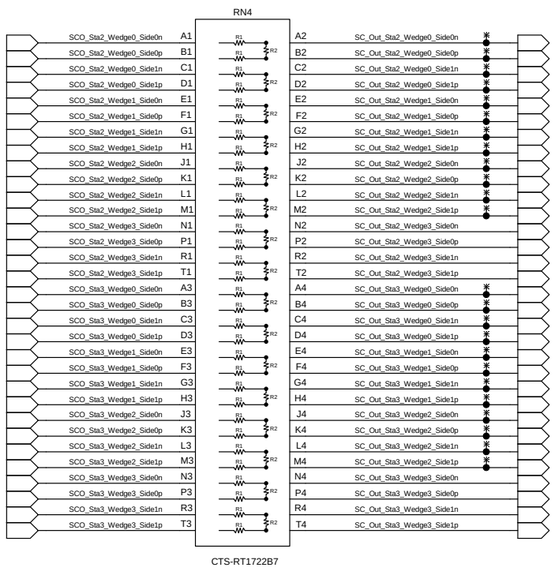

AS OF 10/05/2010 @ 12:50PM

REVISION LETTER	CLASS REVIEW	REVISIONS	DATE	CHANGE BY	CHECK BY	APPROVED BY
—		ORIGINAL ISSUE	—	—	—	—

LOS ALAMOS

LOS ALAMOS NATIONAL LABORATORY
LOS ALAMOS, NEW MEXICO 87545

MENTOR 2005

	NAME	SIGNATURE	DATE	GROUP
ORIGINATED				
DESIGNED				
DRAWN	S. CHACON	S. CHACON	APR 2009	AOT-IC
CHECKED	M. PROKOP	M. PROKOP	APR 2009	AOT-RFE
PROJ. ENGR.	M. PROKOP	M. PROKOP	APR 2009	AOT-RFE
APPROVED				
RELEASED				

CLASSIFICATION OF DRAWING: U
PART: U DRAWING: U

TITLE

(P-25)

FVTX

ROC PROTOTYPE
LVDS Output Terminations

TOLERANCE (UNLESS OTHERWISE NOTED)
X= ± ___ 0.XX= ± ___ ANGULAR ± ___
0.X= ± ___ 0.XXX= ± ___ FINISH ± ___

SCALE	NO. SHEETS	DRAWING NO.	SIZE	SHEET NO.
N/A	1	126Y-267898	D	80

DWG. NO.	SH.	REV

REVISIONS

REV	DESCRIPTION	DATE	APPROVED

CONTRACT NO.	
APPROVALS	DATE
DRAWN	
CHECKED	
ISSUED	

SIZE	FSCM NO.	DWG. NO.	REV
D			
SCALE		SHEET	

H=8ND; V=4LA