REVISIONS						
ZONE	REV	DESCRIPTION	CHANGED BY	DATE	CLASS REVIEW	APPROVED
		ORIGINAL ISSUE			NR	

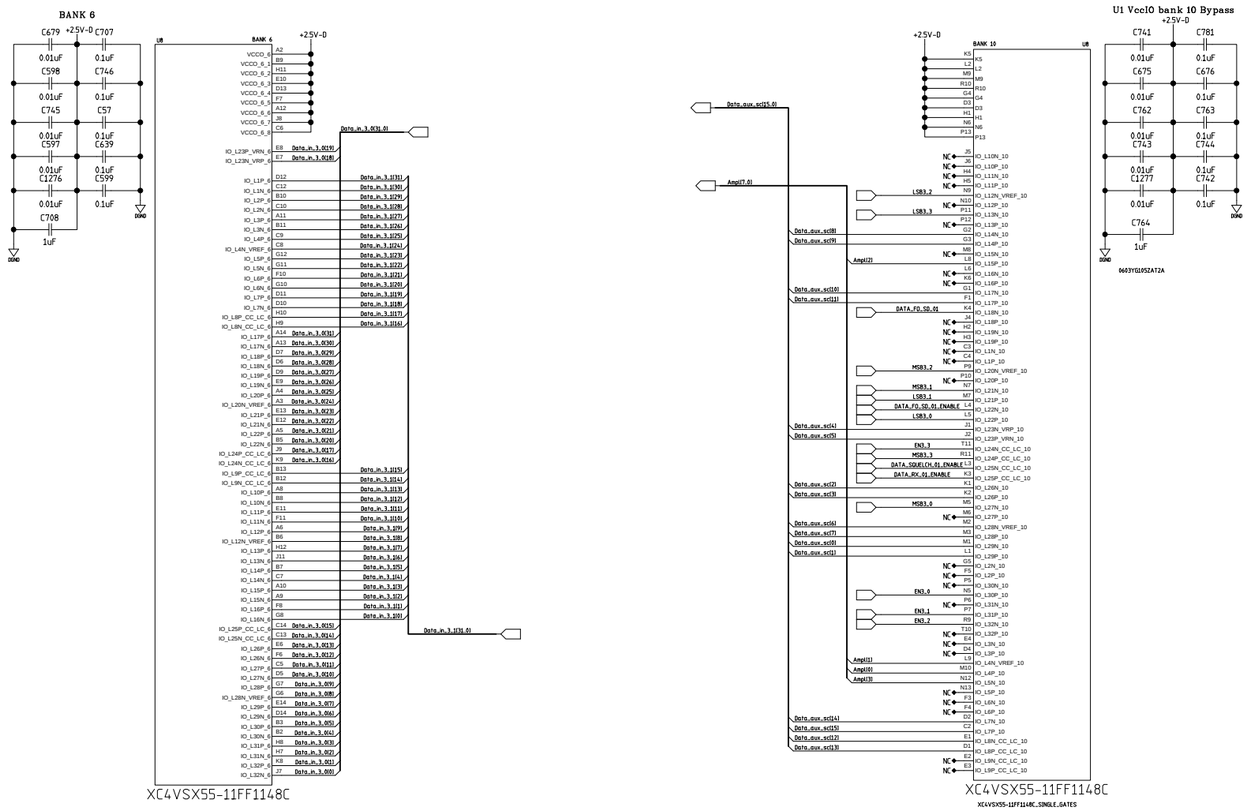

QTY REQD	PART OR IDENTIFYING NO.	NOMENCLATURE OR DESCRIPTION	MATERIAL SPECIFICATION	ZONE	NO.

PART LIST/BILL OF MATERIAL

DRAWING LEVEL

UNCLASSIFIED

WG2004

TASK & CONTRACTOR

CAD SYSTEM & VER.

LOS ALAMOS LOS ALAMOS NATIONAL LABORATORY LOS ALAMOS, NEW MEXICO 87545

UNLESS OTHERWISE SPECIFIED DIMENSIONS ARE IN INCHES.
TOLERANCE ARE:
TOLERANCE ARE:
X± ±.1
.XX± ±.05
.XXX± ±.005
ANGULAR ±
MACHINED FINISH ± 125

	APPROVALS	DATE	GROUP
DESIGNED	M. Prokop	05/09	ADT-RFE
DRAWN	M. Prokop	05/09	ADT-RFE
CHECKED			
ENGINEERING			
CUSTOMER			
APPROVED			
FILE PATH			

NEXT ASSEMBLY | USED ON

APPLICATION

FVTX Front End Module
VME Form Factor

SIZE E | CAGE CODE SCHEMATIC | DRAWING NO & CAD FILENAME 126Y-267961

SCALE NONE | SHEET 1 OF 18

PRINT DATE 05/27/2009 @1:30 PM

REVISIONS						
ZONE	REV	DESCRIPTION	CHANGED BY	DATE	CLASS REVIEW	APPROVED
		ORIGINAL ISSUE			NR	

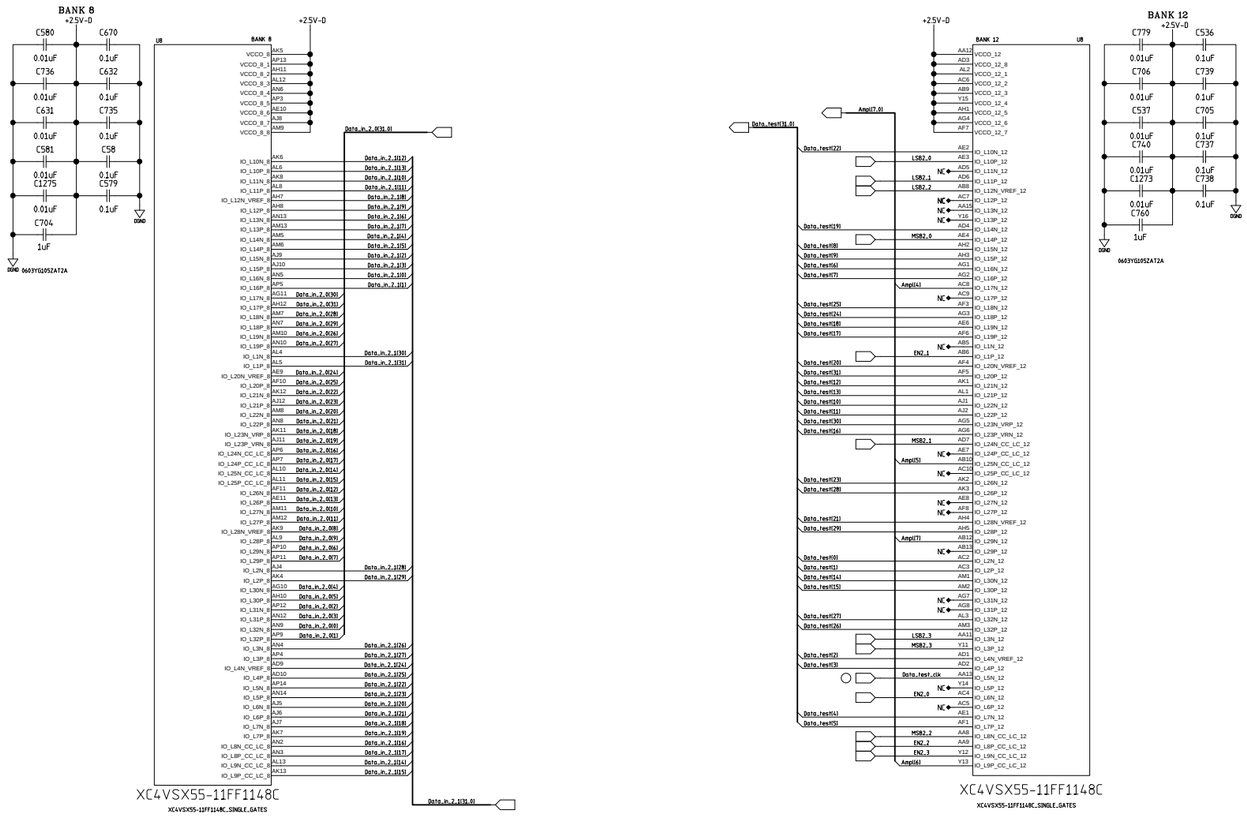

QTY REQD	PART OR IDENTIFYING NO.	NOMENCLATURE OR DESCRIPTION	MATERIAL SPECIFICATION	ZONE	NO.

PART LIST/BILL OF MATERIAL

DRAWING LEVEL: UNCLASSIFIED	TASK & CONTRACTOR: WG2004	LOS ALAMOS — LOS ALAMOS NATIONAL LABORATORY, LOS ALAMOS, NEW MEXICO 87545
	CAD SYSTEM & VER.	
UNLESS OTHERWISE SPECIFIED DIMENSIONS ARE IN INCHES. TOLERANCE ARE: .X= ± .1; .XX= ± .05; .XXX= ± .005 — ANGULAR ±; MACHINED FINISH ± 125	APPROVALS / DATE / GROUP: DESIGNED, DRAWN, CHECKED, ENGINEERING, CUSTOMER, APPROVED	FVTX Front End Module VME Form Factor
NEXT ASSEMBLY / USED ON	APPLICATION / FILE PATH	SIZE E; CAGE CODE SCHEMATIC; DRAWING NO & CAD FILENAME 126Y-267961
		SCALE NONE; SHEET 2 OF 18

PRINT DATE 05/27/2009 @1:30 PM

REVISIONS						
ZONE	REV	DESCRIPTION	CHANGED BY	DATE	CLASS REVIEW	APPROVED
		ORIGINAL ISSUE			NR	

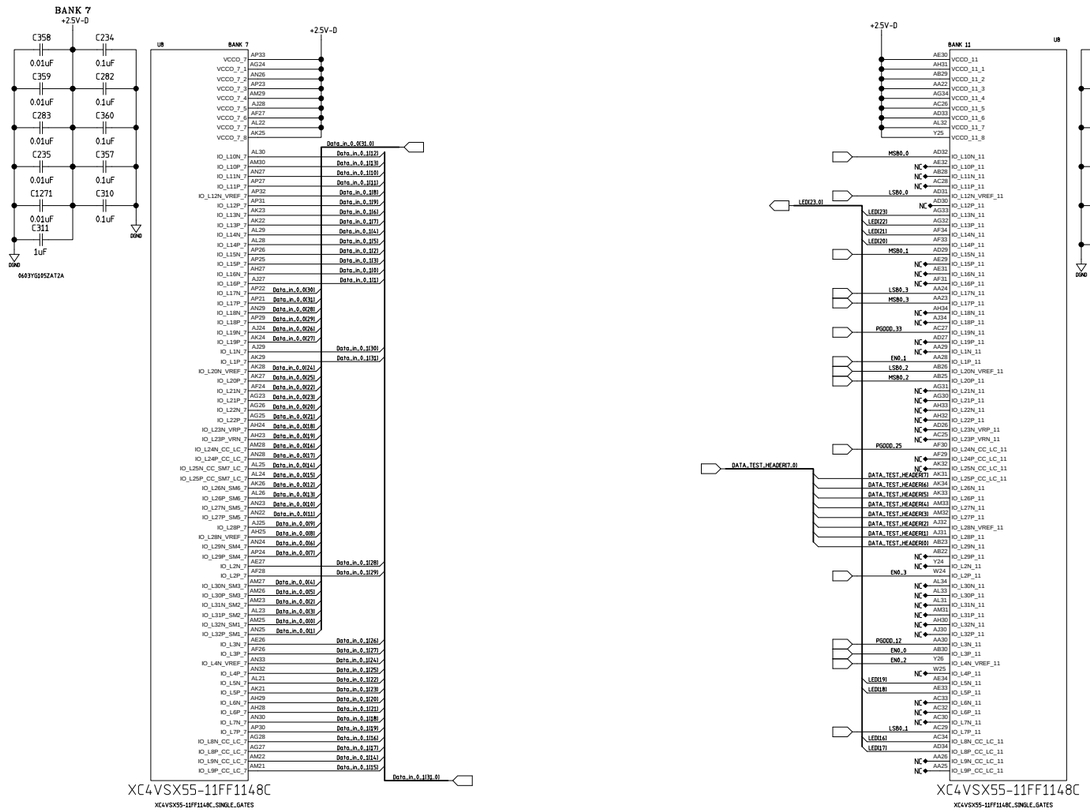

QTY REQD	PART OR DRAWING NO.	NOMENCLATURE OR DESCRIPTION	MATERIAL SPECIFICATION	ZONE	NO.

PART LIST/BILL OF MATERIAL

DRAWING LEVEL

UNCLASSIFIED

TASK & CONTRACTOR: WG2004

CAD SYSTEM & VER.

LOS ALAMOS — LOS ALAMOS NATIONAL LABORATORY, LOS ALAMOS, NEW MEXICO 87545

UNLESS OTHERWISE SPECIFIED DIMENSIONS ARE IN INCHES.
TOLERANCE ARE:
TOLERANCE ARE: X ± .1, .XX ± .05, .XXX ± .015
ANGULAR ±
MACHINED FINISH ± 125

	APPROVALS	DATE	GROUP
DESIGNED			
DRAWN			
CHECKED			
ENGINEERING			
CUSTOMER			
APPROVED			
FILE PATH			

NEXT ASSEMBLY | USED ON

APPLICATION

FVTX Front End Module
VME Form Factor

SIZE E | CAGE CODE SCHEMATIC | DRAWING NO & CAD FILENAME 126Y-267961

SCALE NONE | SHEET 3 OF 18

PRINT DATE 05/27/2009 @1:30 PM

REVISIONS						
ZONE	REV	DESCRIPTION	CHANGED BY	DATE	CLASS REVIEW	APPROVED
		ORIGINAL ISSUE			NR	

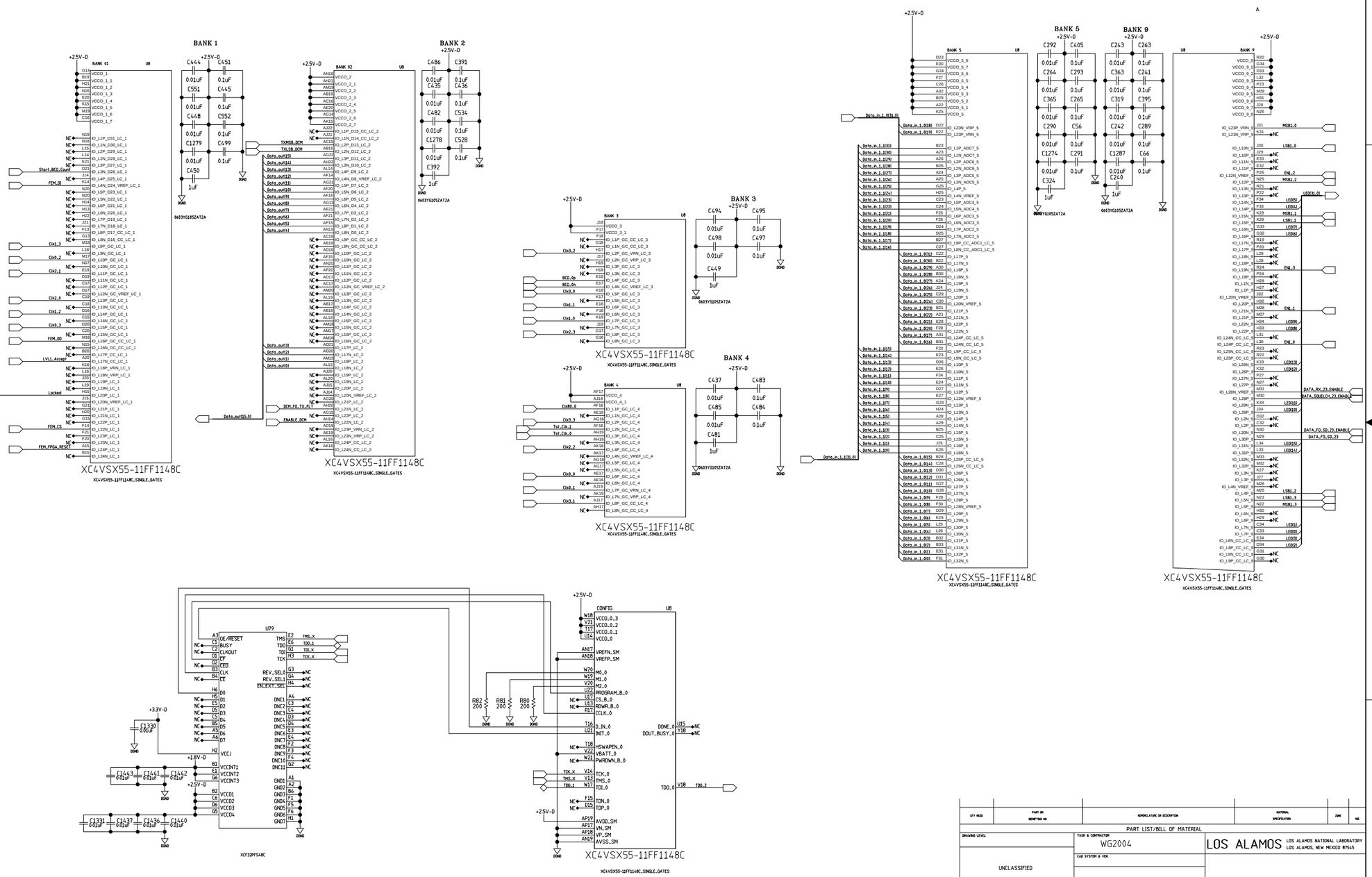

QTY REQD	PART OR IDENTIFYING NO	NOMENCLATURE OR DESCRIPTION	MATERIAL SPECIFICATION	ZONE	NO

PART LIST/BILL OF MATERIAL

DRAWING LEVEL: UNCLASSIFIED

TASK & CONTRACTOR: WG2004

CAD SYSTEM & VER.

LOS ALAMOS — LOS ALAMOS NATIONAL LABORATORY, LOS ALAMOS, NEW MEXICO 87545

UNLESS OTHERWISE SPECIFIED DIMENSIONS ARE IN INCHES. TOLERANCE ARE. TOLERANCE ARE. .XX ± .1 .XXX ± .05 .XXXX ± .005 ANGULAR ± MACHINED FINISH ± 125

	APPROVALS	DATE	GROUP
DESIGNED			
DRAWN			
CHECKED			
ENGINEERING			
CUSTOMER			
APPROVED			
FILE PATH			

NEXT ASSEMBLY | USED ON

APPLICATION

FVTX Front End Module
VME Form Factor

SIZE: E | CAGE CODE: SCHEMATIC | DRAWING NO & CAD FILENAME: 126Y-267961

SCALE: NONE | SHEET 4 OF 18

PRINT DATE 05/27/2009 @1:30 PM

REVISIONS						
ZONE	REV	DESCRIPTION	CHANGED BY	DATE	CLASS REVIEW	APPROVED
		ORIGINAL ISSUE			NR	

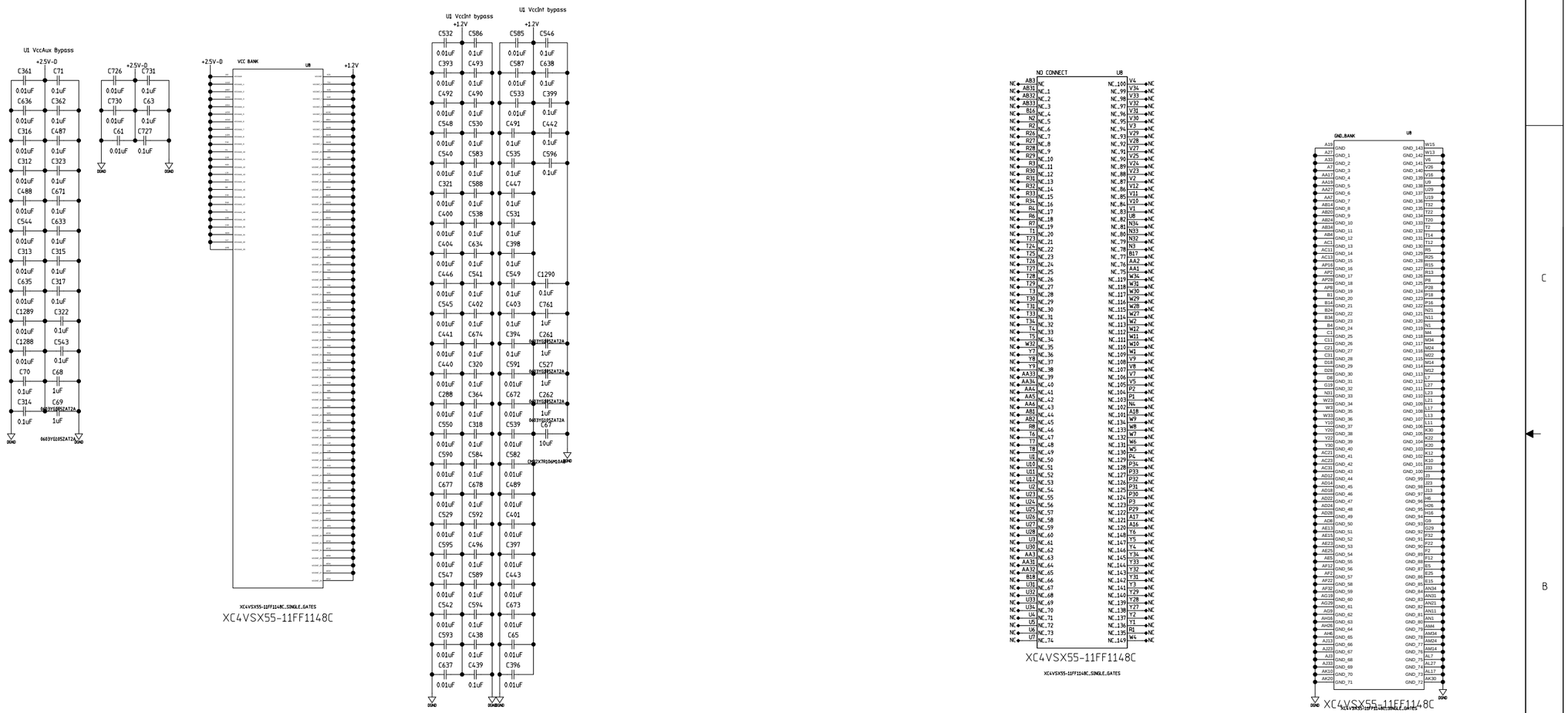

QTY REQD	PART OR DRAWING NO	NOMENCLATURE OR DESCRIPTION	MATERIAL SPECIFICATION	ZONE	NO

PART LIST/BILL OF MATERIAL

DRAWING LEVEL

UNCLASSIFIED

TASK & CONTRACTOR: WG2004

CAD SYSTEM & VER.

LOS ALAMOS — LOS ALAMOS NATIONAL LABORATORY, LOS ALAMOS, NEW MEXICO 87545

UNLESS OTHERWISE SPECIFIED DIMENSIONS ARE IN INCHES.
TOLERANCE ARE:
TOLERANCE ARE:
.XX ± .5
.XXX ± .25
.XXXX ± .005
ANGULAR ±
MACHINED FINISH ± 125

APPROVALS	DATE	GROUP
DESIGNED		
DRAWN		
CHECKED		
ENGINEERING		
CUSTOMER		
APPROVED		
FILE PATH		

NEXT ASSEMBLY | USED ON

APPLICATION

FVTX Front End Module
VME Form Factor

SIZE	CAGE CODE	DRAWING NO. & CAD FILENAME
E	SCHEMATIC	126Y-267961

SCALE NONE — SHEET 5 OF 18

PRINT DATE 05/27/2009 @1:30 PM

DWG. NO.	SH.	REV

REVISIONS

REV	DESCRIPTION	DATE	APPROVED

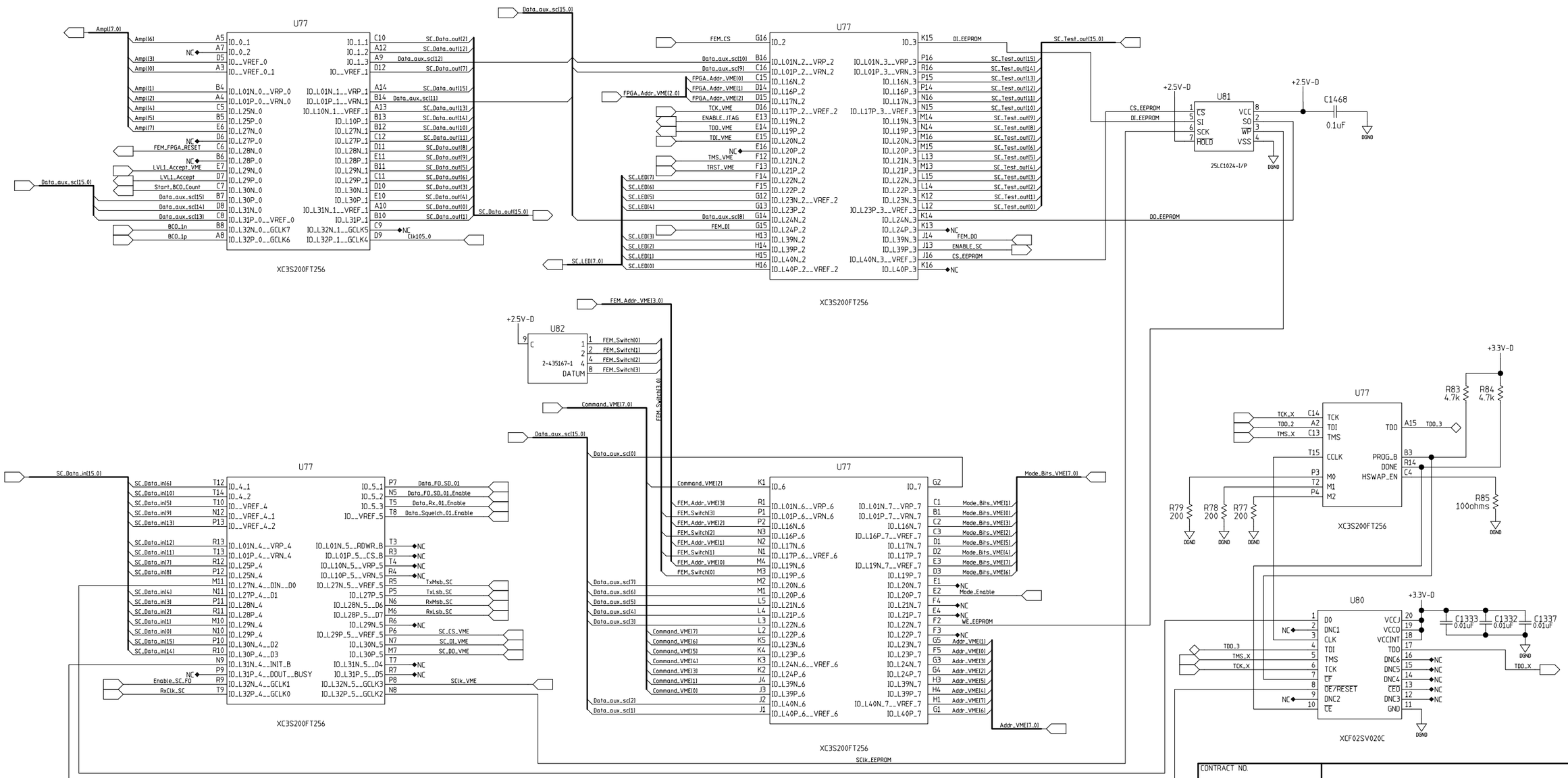

CONTRACT NO.	
APPROVALS	DATE
DRAWN	
CHECKED	
ISSUED	

FVTX Front End Module
VME Form Factor

SIZE	FSCM NO.	DWG. NO.	REV
D		126Y-267961	
SCALE		SHEET 6 of 18	

PRINT DATE 05/27/2009 @1:30 PM

H=8ND; V=4LA

DWG. NO.	SH.	REV

REVISIONS

REV	DESCRIPTION	DATE	APPROVED

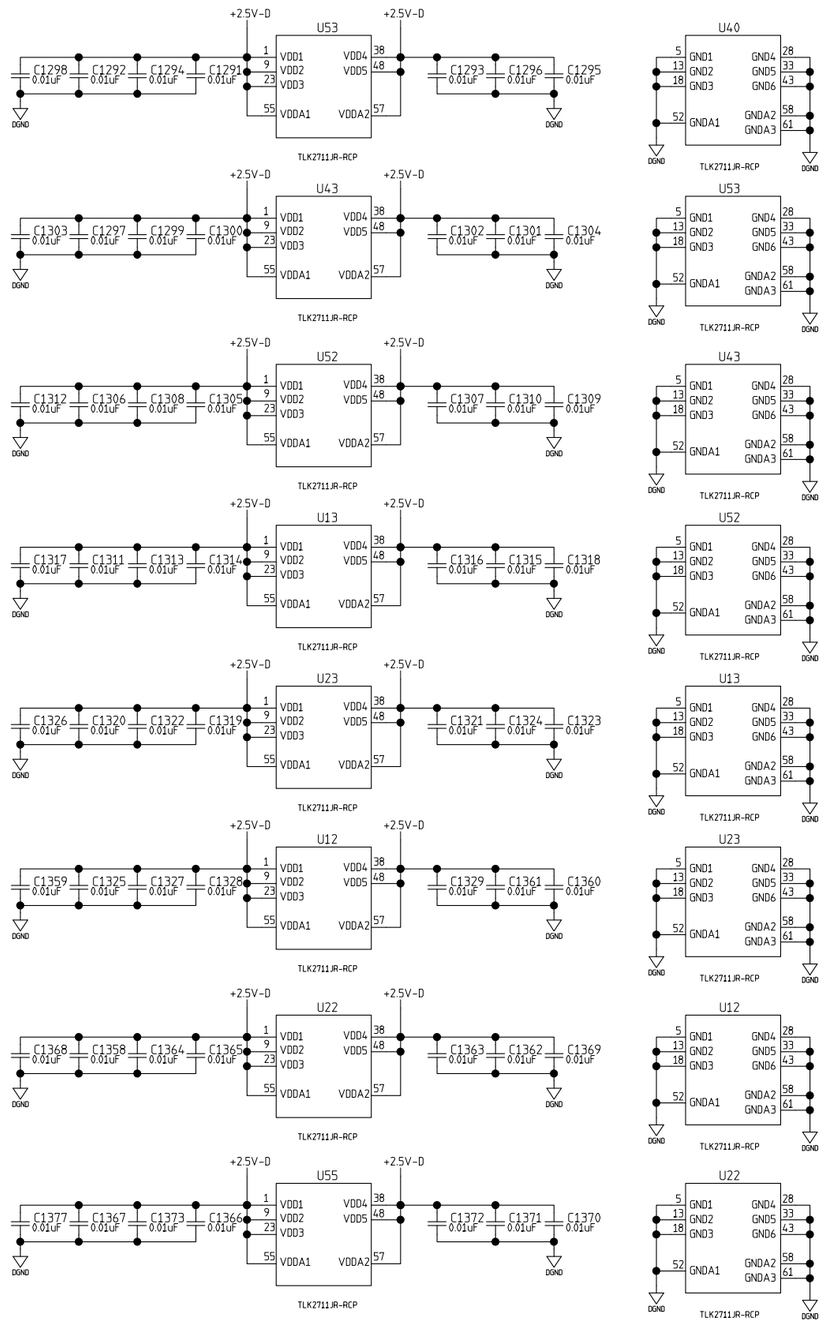

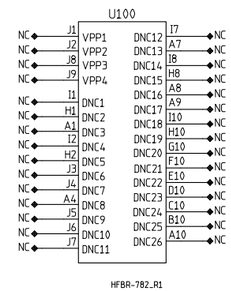

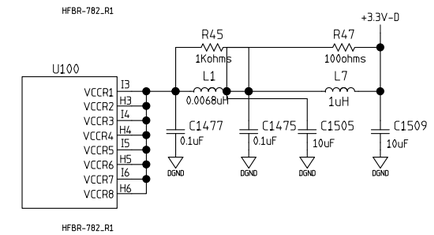

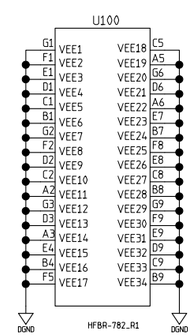

CONTRACT NO.		
APPROVALS	DATE	FVTX Front End Module VME Form Factor
DRAWN		
CHECKED		
ISSUED		SIZE D · FSCM NO. · DWG. NO. 126Y-267961 · REV
		SCALE · SHEET 7 of 18

PRINT DATE 05/27/2009 @1:30 PM

H=8ND; V=4LA

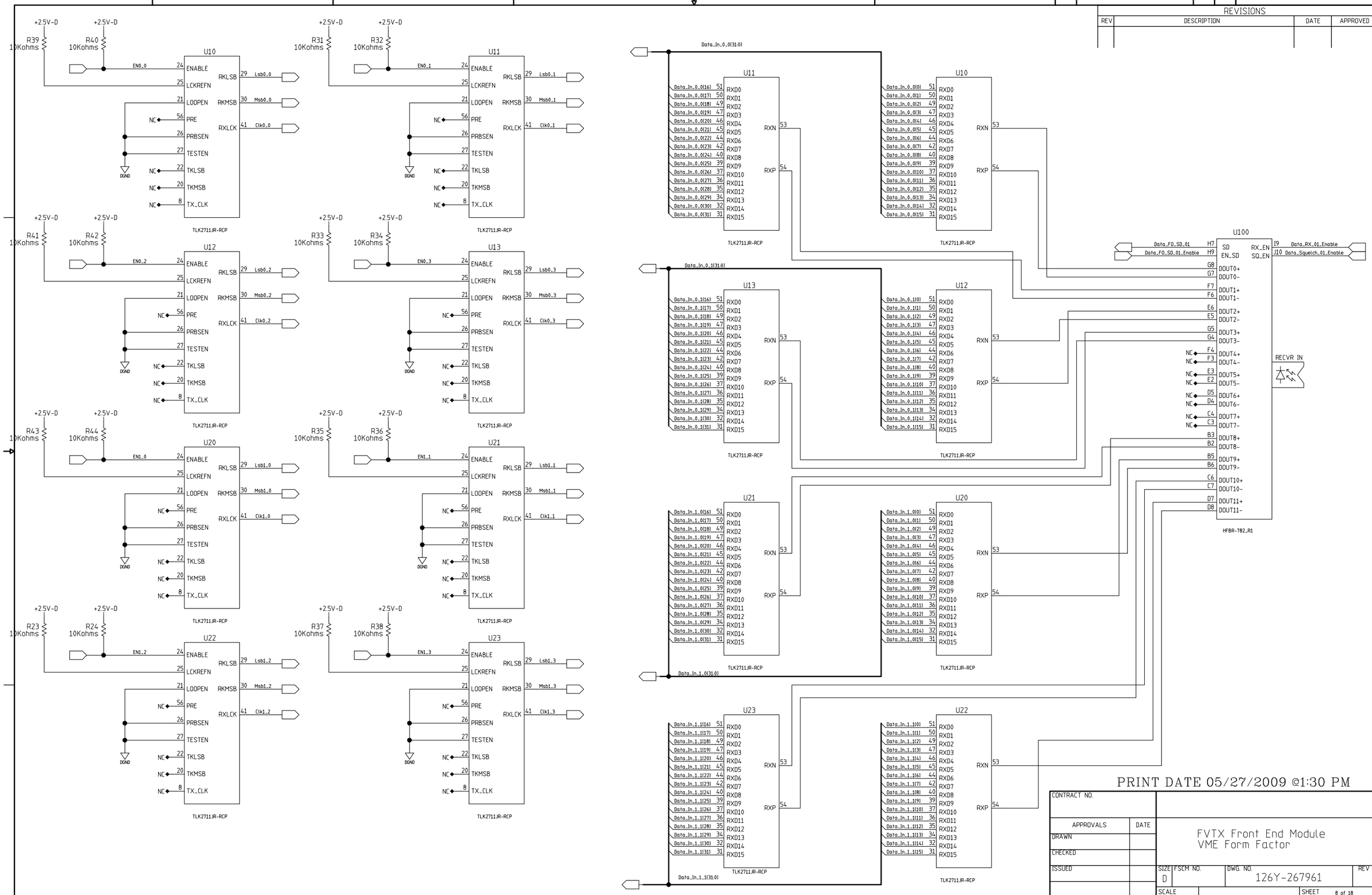

REVISIONS			
REV	DESCRIPTION	DATE	APPROVED

PRINT DATE 05/27/2009 @1:30 PM

CONTRACT NO.		
APPROVALS	DATE	FVTX Front End Module VME Form Factor
DRAWN		
CHECKED		
ISSUED		SIZE D · FSCM NO. · DWG. NO. 126Y-267961 · REV
		SCALE · SHEET 8 of 18

H=BND; V=4LA

DWG. NO.	SH.	REV

REVISIONS

REV	DESCRIPTION	DATE	APPROVED

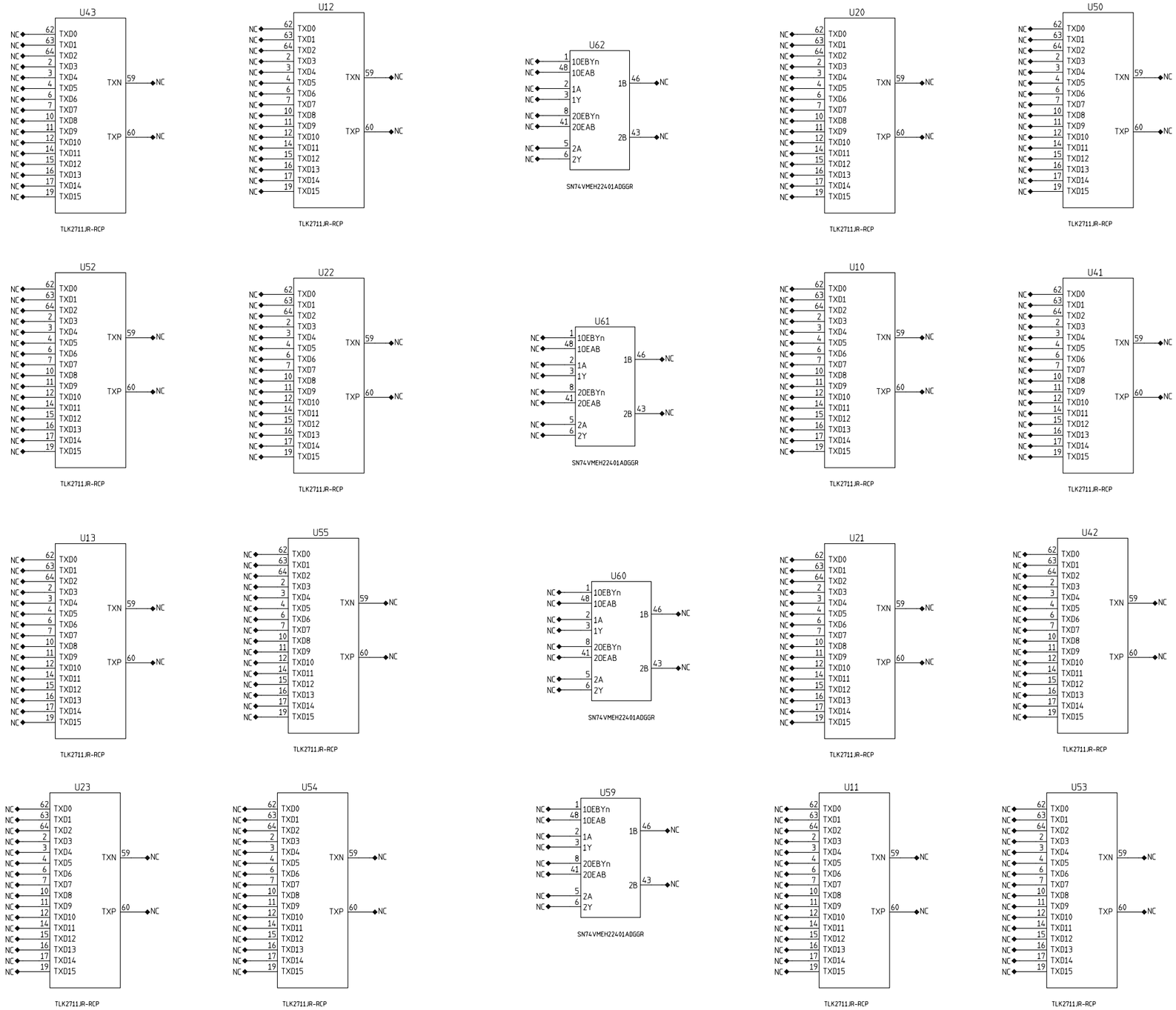

PRINT DATE 05/27/2009 @1:30 PM

CONTRACT NO.		
APPROVALS	DATE	FVTX Front End Module VME Form Factor
DRAWN		
CHECKED		
ISSUED		SIZE D · FSCM NO. · DWG. NO. 126Y-267961 · REV
		SCALE · SHEET 9 of 18

H=8ND; V=4LA

DWG. NO.	SH.	REV

REVISIONS

REV	DESCRIPTION	DATE	APPROVED

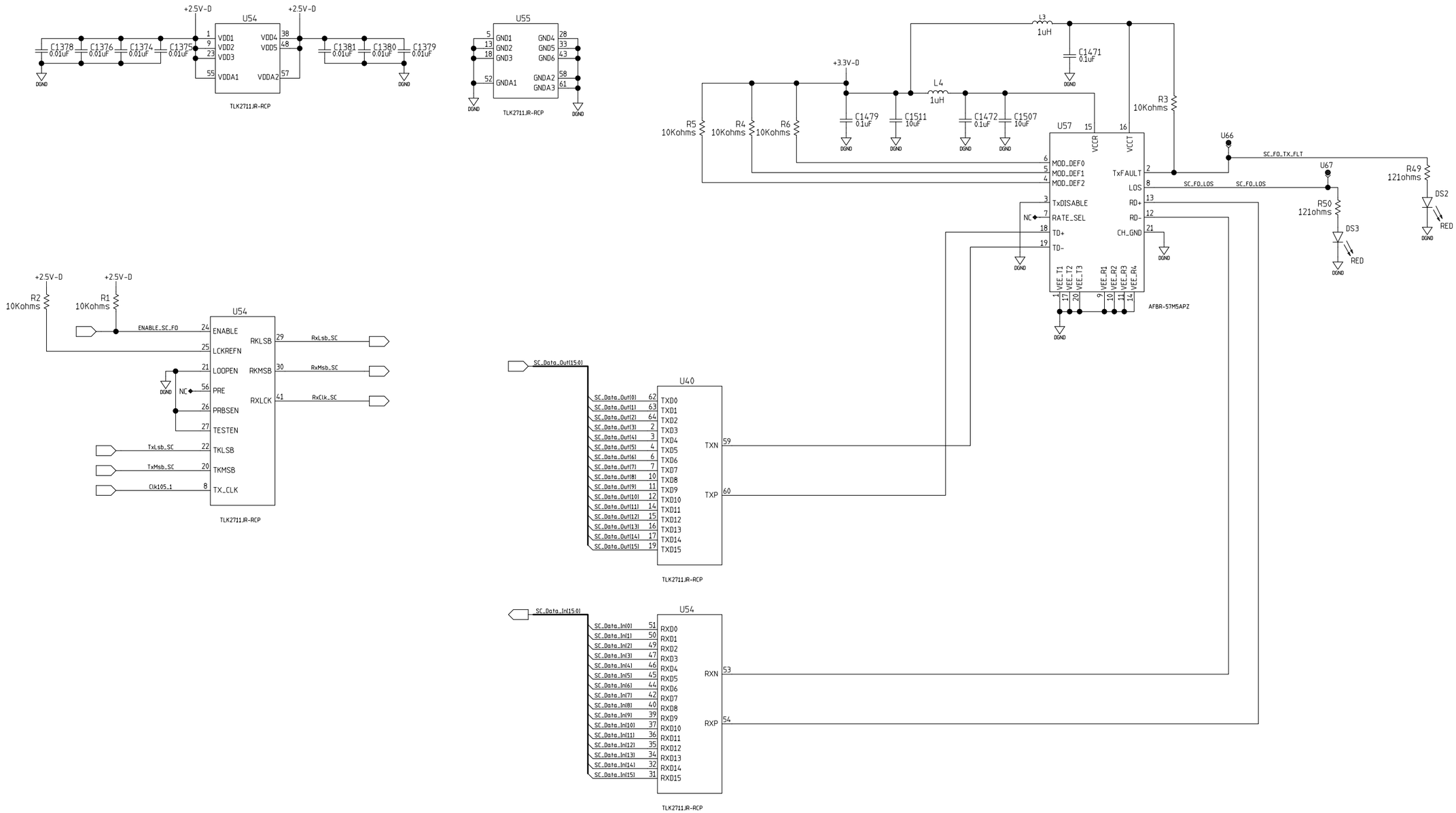

CONTRACT NO.		
APPROVALS	DATE	FVTX Front End Module VME Form Factor
DRAWN		
CHECKED		
ISSUED		SIZE D · FSCM NO. · DWG. NO. 126Y-267961 · REV
		SCALE · SHEET 10 of 18

PRINT DATE 05/27/2009 @1:30 PM

H=8ND; V=4LA

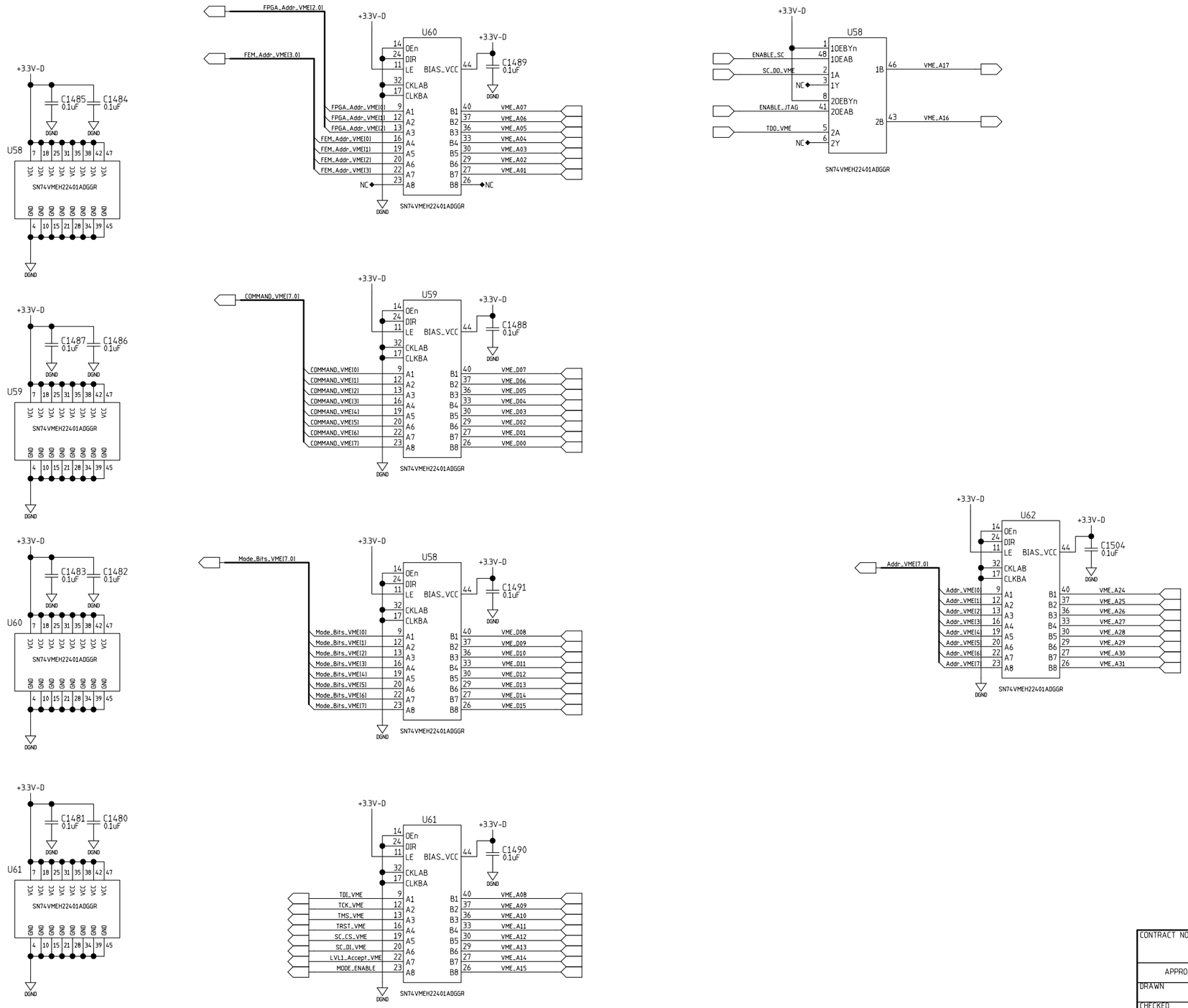

REVISIONS			
REV	DESCRIPTION	DATE	APPROVED

CONTRACT NO.	
APPROVALS / DATE	FVTX Front End Module VME Form Factor
DRAWN	
CHECKED	
ISSUED	
SIZE D	FSCM NO. / DWG. NO. 126Y-267961 / REV
SCALE	SHEET 11 of 18

PRINT DATE 05/27/2009 @1:30 PM

H=8ND; V=4LA

DWG. NO.	SH.	REV

REVISIONS

REV	DESCRIPTION	DATE	APPROVED

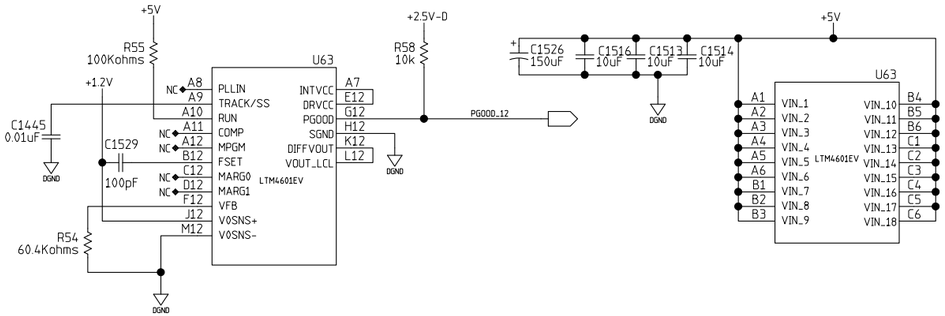

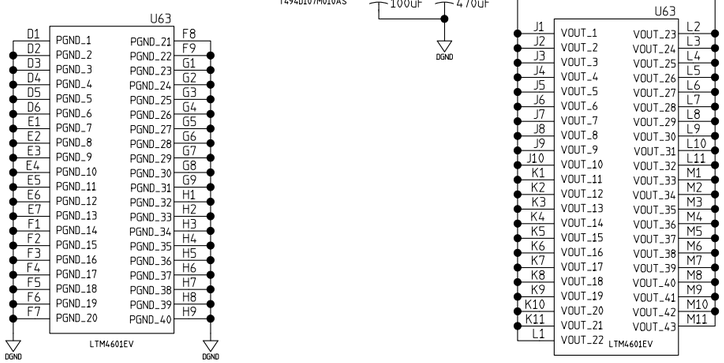

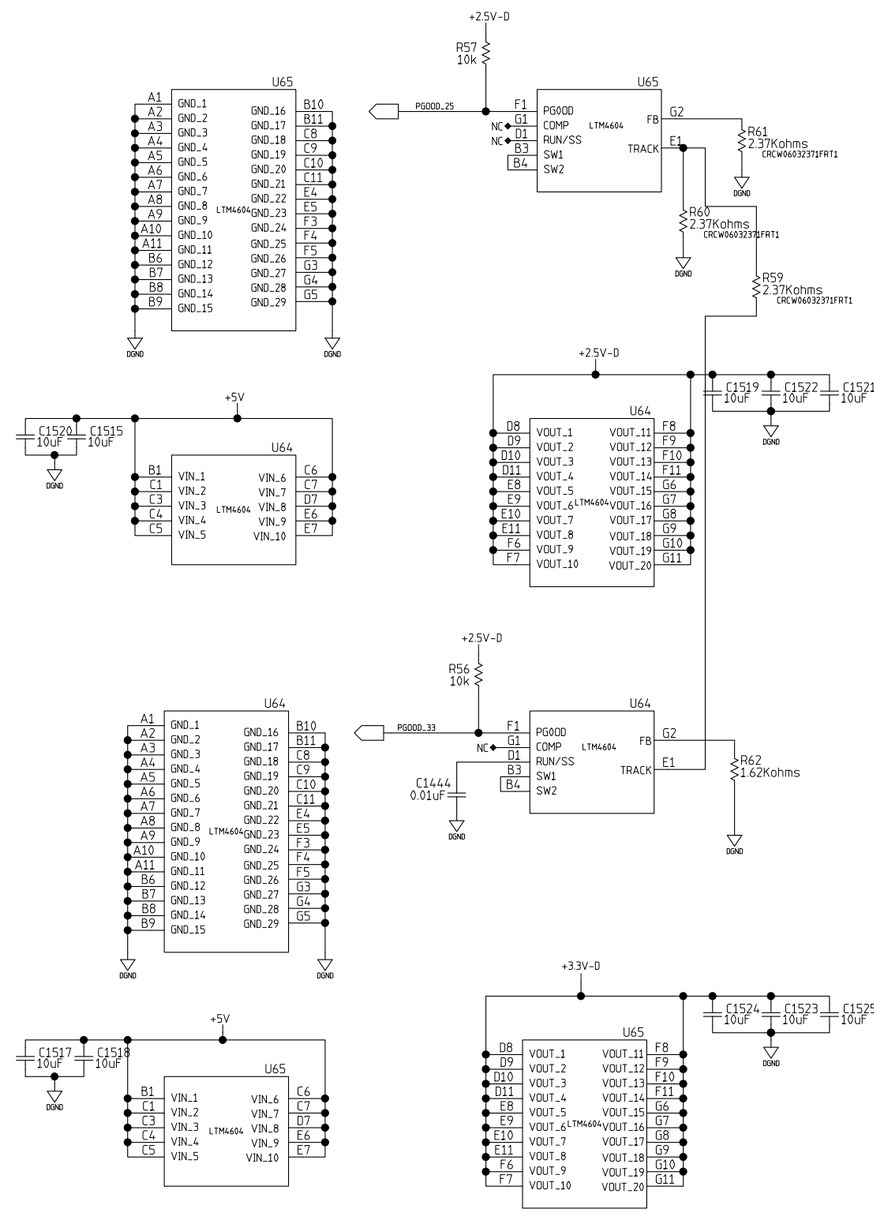

CONTRACT NO.		
APPROVALS	DATE	FVTX Front End Module VME Form Factor
DRAWN		
CHECKED		
ISSUED		SIZE D · FSCM NO. · DWG. NO. 126Y-267961 · REV
		SCALE · SHEET 12 of 18

PRINT DATE 05/27/2009 @1:30 PM

H:8ND; V:4LA

DWG. NO.	SH.	REV

REVISIONS

REV	DESCRIPTION	DATE	APPROVED

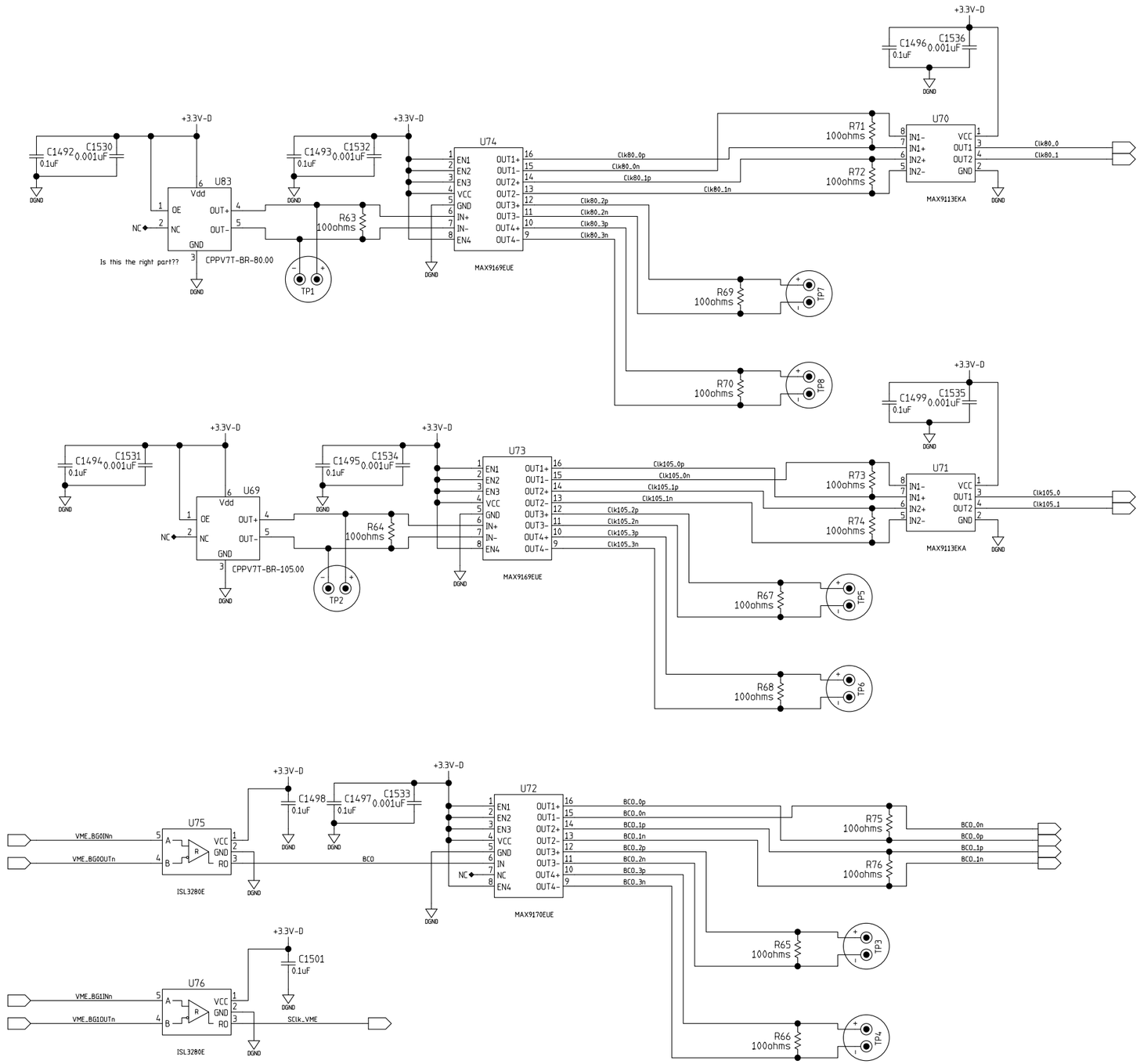

CONTRACT NO.		
APPROVALS	DATE	FVTX Front End Module VME Form Factor
DRAWN		
CHECKED		
ISSUED		SIZE D · FSCM NO. · DWG. NO. 126Y-267961 · REV
		SCALE · SHEET 13 of 18

PRINT DATE 05/27/2009 @1:30 PM

H=8ND; V=4LA

REVISIONS						
ZONE	REV	DESCRIPTION	CHANGED BY	DATE	CLASS REVIEW	APPROVED
	A	ORIGINAL ISSUE			NR	

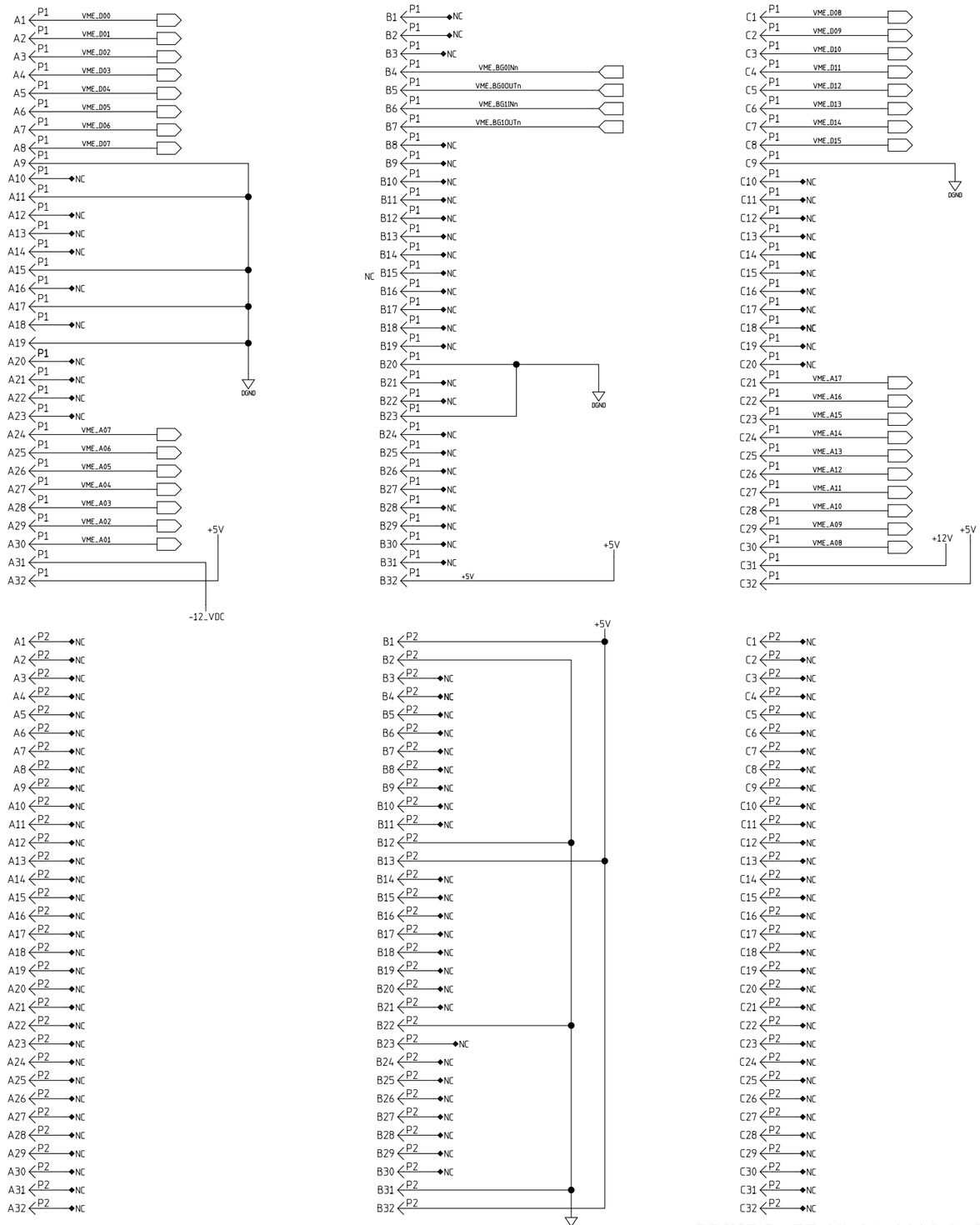

PRINT DATE 05/27/2009 @1:30 PM

QTY REQD	PART OR IDENTIFYING NO.	NOMENCLATURE OR DESCRIPTION	MATERIAL SPECIFICATION	ZONE	NO.

PART LIST/BILL OF MATERIAL

DRAWING LEVEL: UNCLASSIFIED

TASK & CONTRACTOR:

CAD SYSTEM & VER.: MENTOR 2004

LOS ALAMOS — LOS ALAMOS NATIONAL LABORATORY, LOS ALAMOS, NEW MEXICO 87545

PROJECT:

UNLESS OTHERWISE SPECIFIED: DIMENSIONS ARE IN INCHES.
TOLERANCE ARE:
TOLERANCE ARE:
.X= ± .1
.XX= ± .01
.XXX= ± .005
ANGULAR ±
MACHINED FINISH ± 125

	APPROVALS	DATE	GROUP
DESIGNED			
DRAWN			
CHECKED			
ENGINEERING			
CUSTOMER			
APPROVED			
FILE PATH			

NEXT ASSEMBLY | USED ON
APPLICATION

FVTX Front End Module
VME Form Factor

SIZE: D | CAGE CODE | DRAWING NO. & CAD FILENAME: 126Y-267961

SCALE: NONE | SHEET 14 OF 18

DWG. NO.	SH.	REV

REVISIONS

REV	DESCRIPTION	DATE	APPROVED

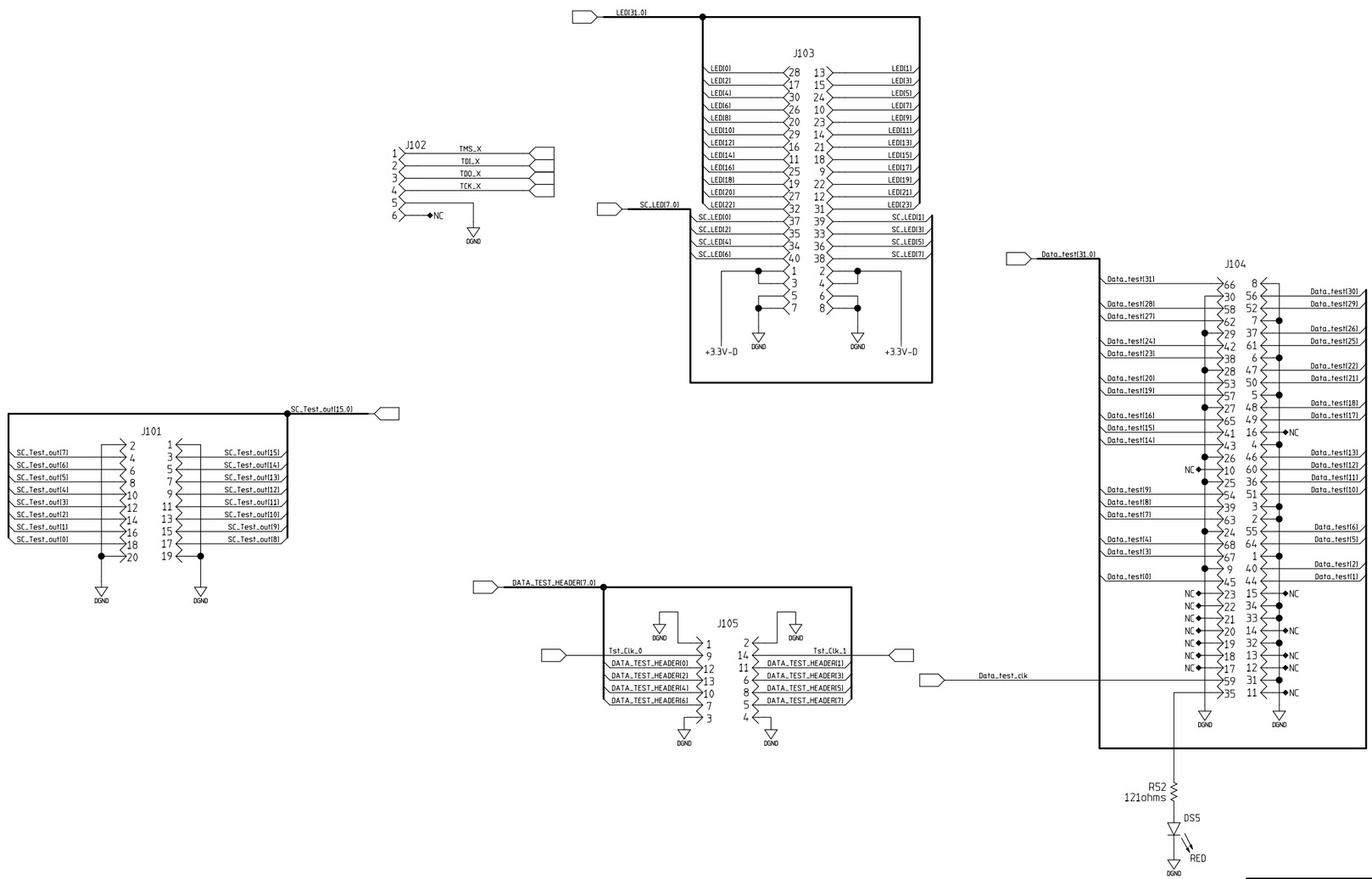

CONTRACT NO.	
APPROVALS	DATE
DRAWN	
CHECKED	
ISSUED	

FVTX Front End Module
VME Form Factor

SIZE	FSCM NO.	DWG. NO.	REV
D		126Y-267961	
SCALE		SHEET 15 of 18	

PRINT DATE 05/27/2009 @1:30 PM

H=8ND; V=4LA

DWG. NO.	SH.	REV

REVISIONS

REV	DESCRIPTION	DATE	APPROVED

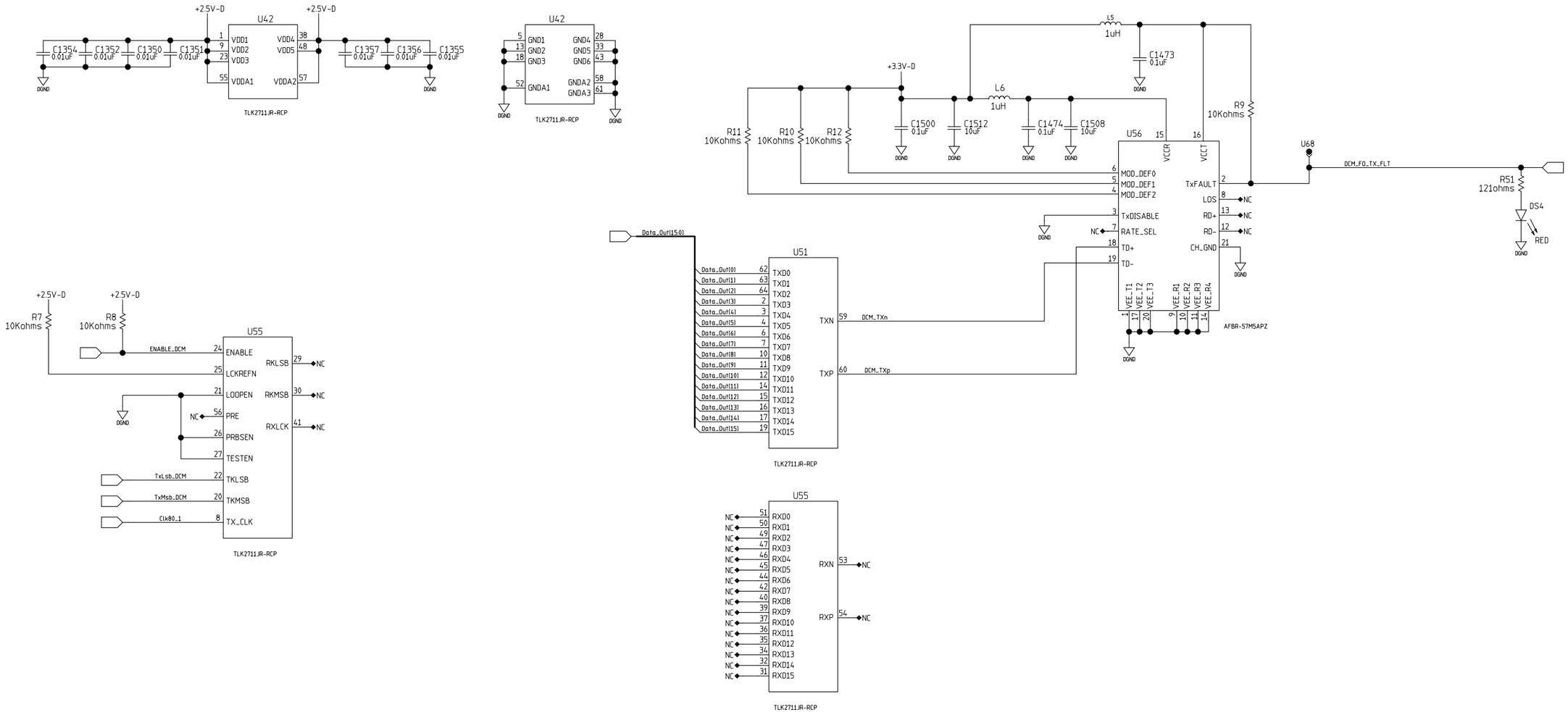

CONTRACT NO.		
APPROVALS	DATE	FVTX Front End Module VME Form Factor
DRAWN		
CHECKED		
ISSUED		SIZE D · FSCM NO. · DWG. NO. 126Y-267961 · REV
		SCALE · SHEET 16 of 18

PRINT DATE 05/27/2009 @1:30 PM

H=8ND; V=4LA

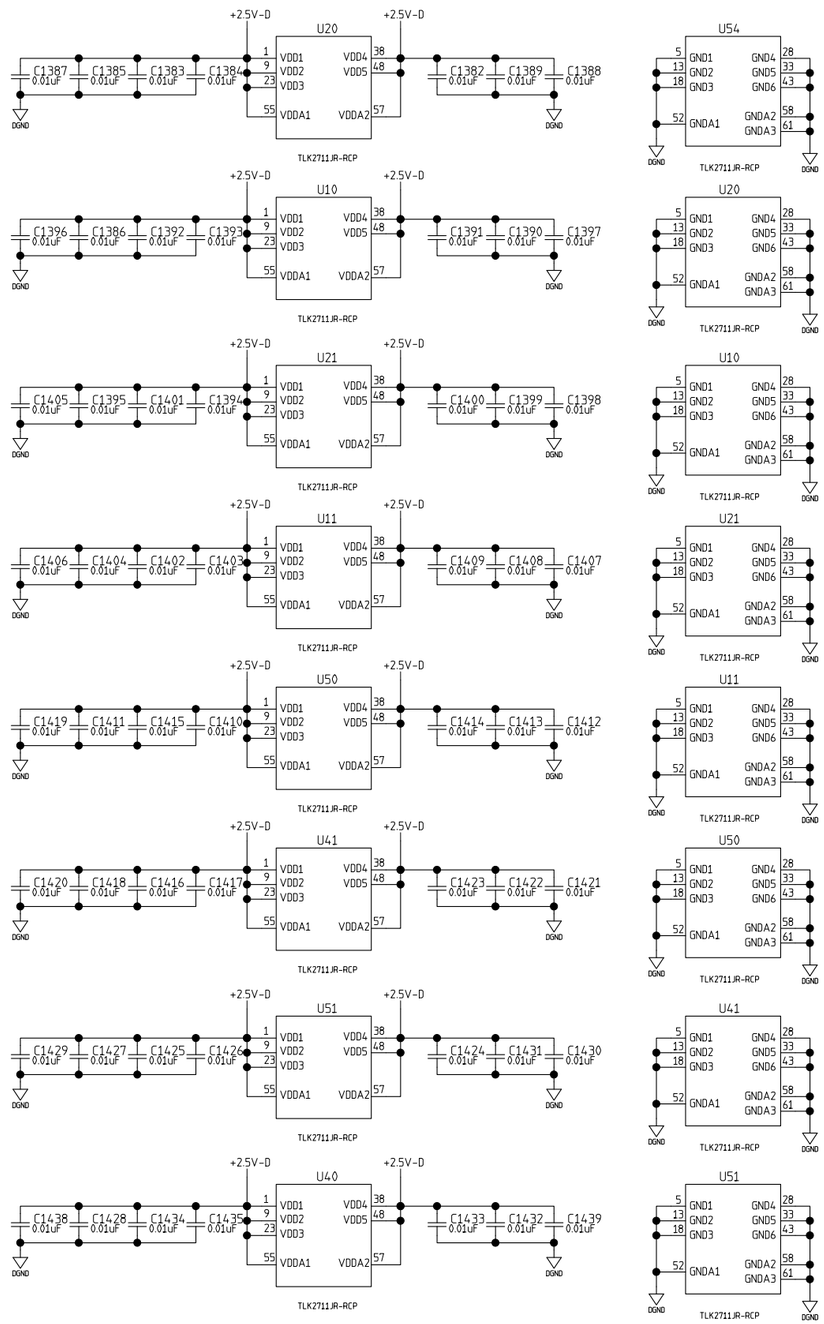

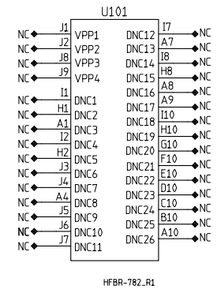

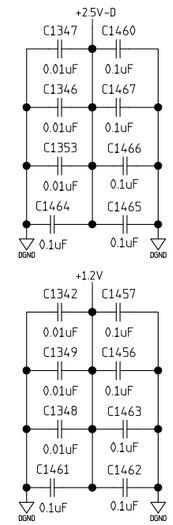

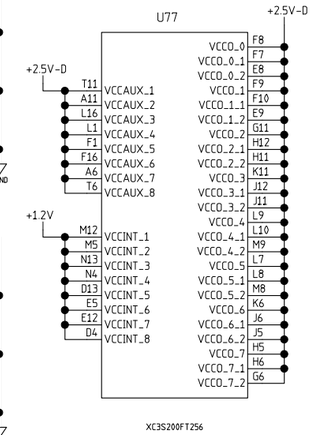

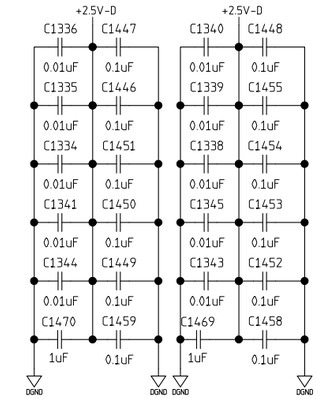

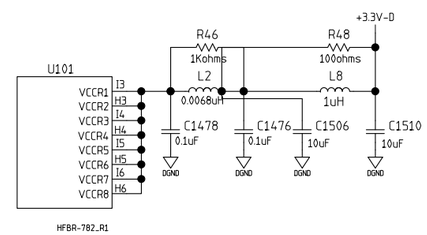

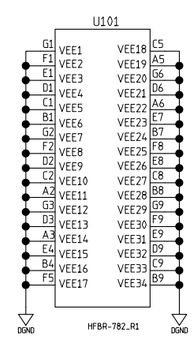

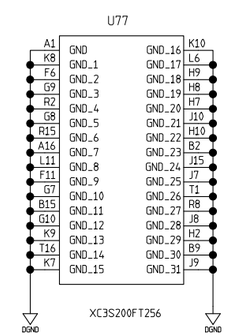

REVISIONS			
REV	DESCRIPTION	DATE	APPROVED

CONTRACT NO.			
APPROVALS	DATE	FVTX Front End Module VME Form Factor	
DRAWN			
CHECKED			
ISSUED		SIZE D / FSCM NO. / DWG. NO. 126Y-267961	REV
		SCALE	SHEET 17 of 18

PRINT DATE 05/27/2009 @1:30 PM

H=8ND; V=4LA

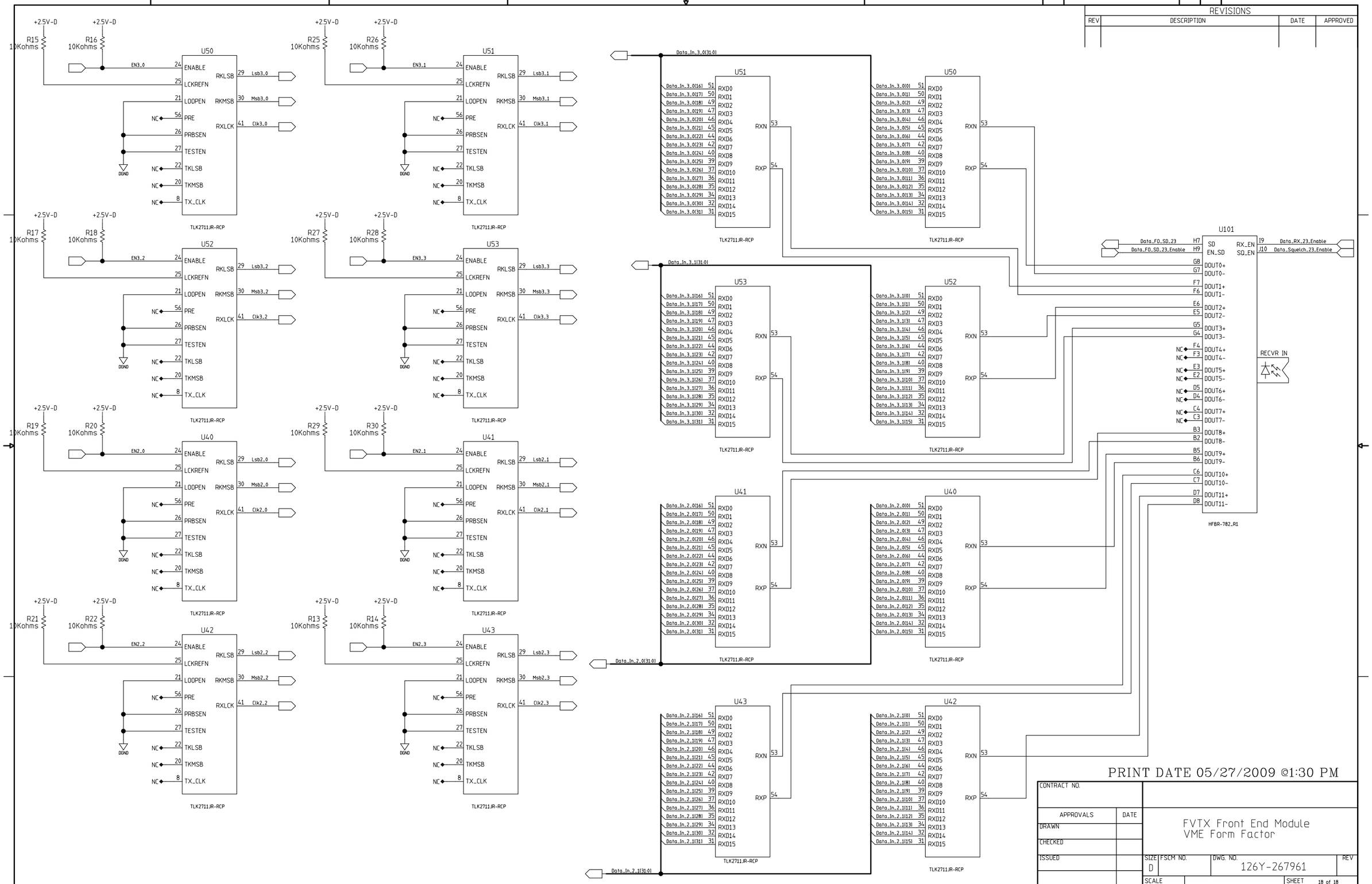
U50
U51
U52
U53
U40
U41
U42
U43
U101
TLK2711JR-RCP
HFBR-782_R1
RECVR IN
PRINT DATE 05/27/2009 @1:30 PM
FVTX Front End Module
VME Form Factor
126Y-267961
SIZE D
SHEET 18 of 18
CONTRACT NO.
APPROVALS
DATE
DRAWN
CHECKED
ISSUED
DWG. NO.
SH.
REV
REVISIONS
DESCRIPTION
APPROVED
H=BND; V=4LA