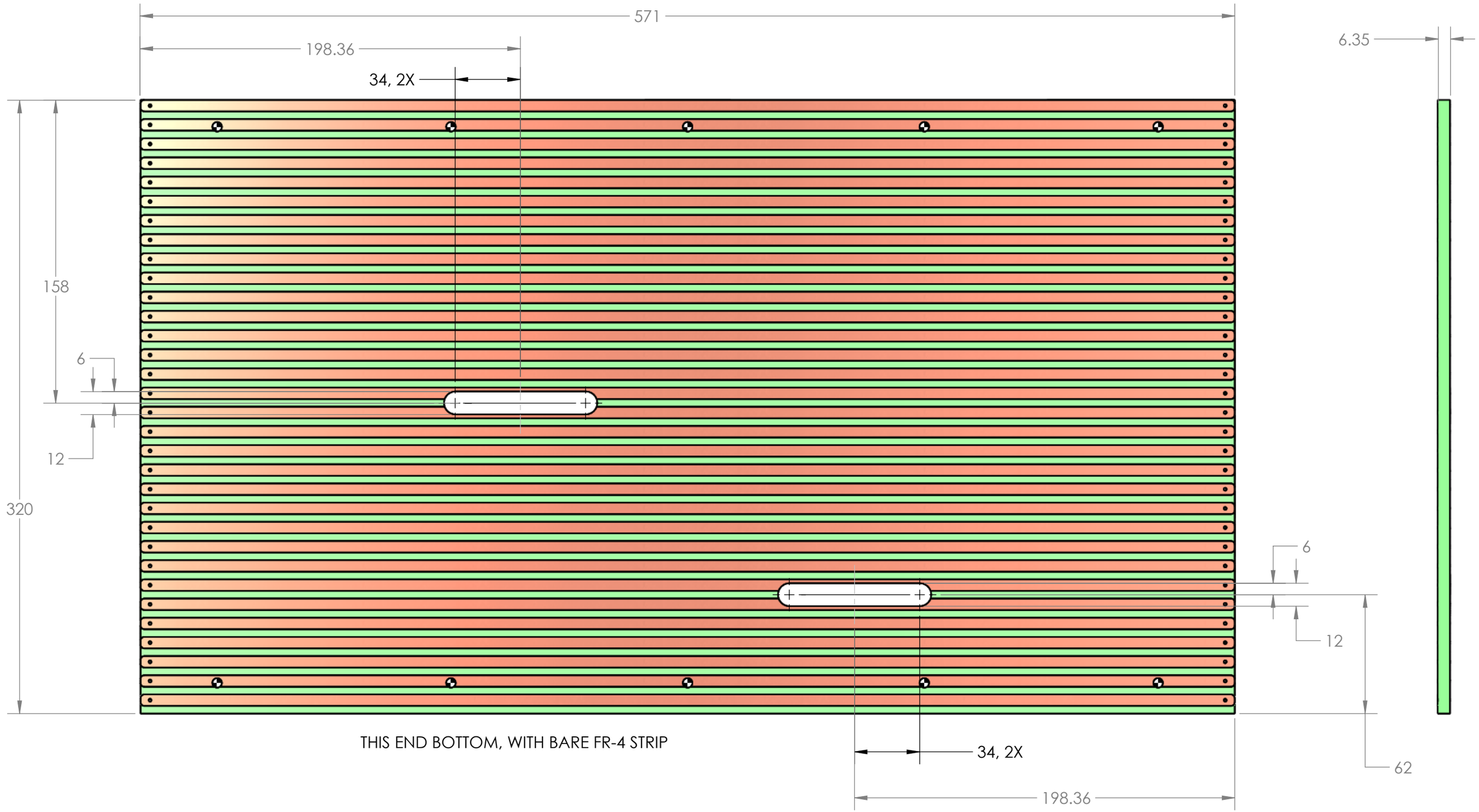

ALL DIMENSIONS IN MILLIMETERS

P-25 SUBATOMIC PHYSICS	DIMENSIONS ARE IN INCHES TOLERANCES UNLESS SPECIFIED: FRACTIONAL ± ANGULAR: MACH ± BEND ± TWO PLACE DECIMAL ± 0.01 THREE PLACE DECIMAL ± 0.003		NAME	DATE	
		DRAWN	WALT	11/5/2013	
		CHECKED			
		ENG APPR.			
		MFG APPR.			
		Q.A.			
LOS ALAMOS NATIONAL LABORATORY LOS ALAMOS, NM, 87545	MATERIAL FR-4 w 1oz copper	COMMENTS:			hexagon-field-cage-panel-w-slits-mini2 (modification to existing field cage panel)
	FINISH				
	QUANTITY REQUIRED 1				SIZE B · DWG. NO. 126Y-1766708-27 · REV. A
					SCALE:1: 2 · WEIGHT: · SHEET 1 OF 2

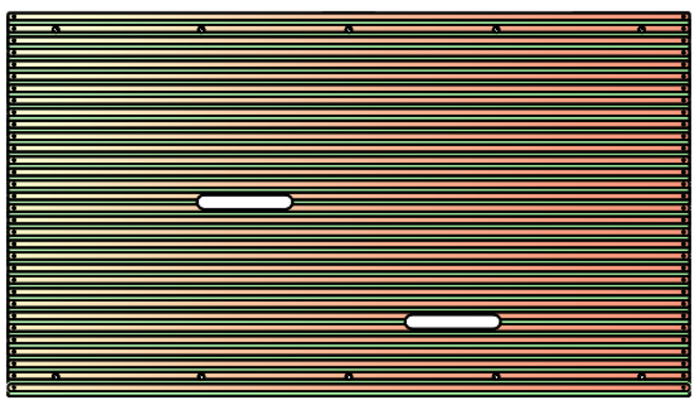

VIEW FROM SHEET 1

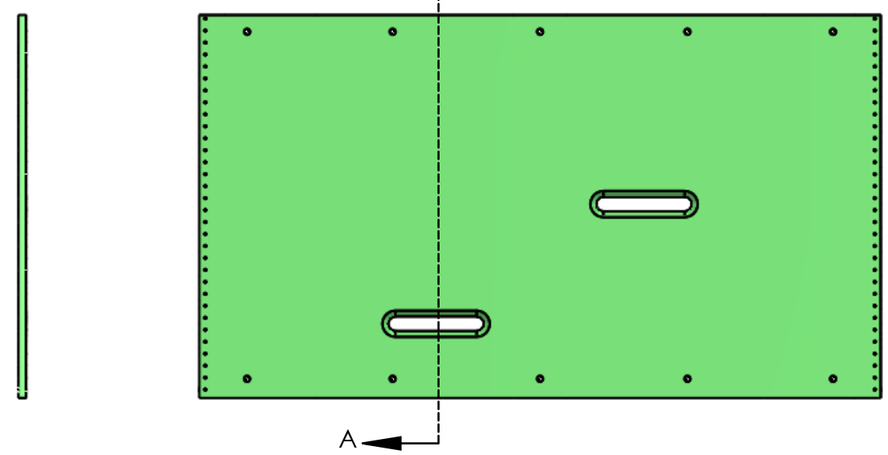

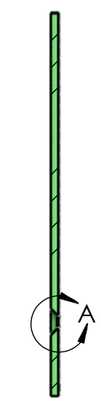

SECTION A-A

DETAIL A
SCALE 1 : 1

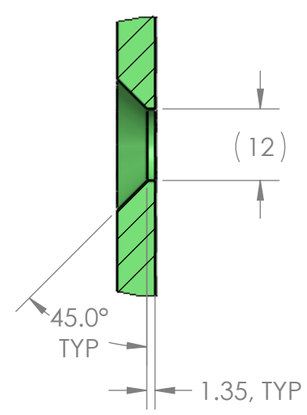

ALL DIMENSIONS IN INCHES

P-25 SUBATOMIC PHYSICS	DIMENSIONS ARE IN INCHES TOLERANCES UNLESS SPECIFIED: FRACTIONAL ± ANGULAR: MACH ± BEND ± TWO PLACE DECIMAL ± 0.01 THREE PLACE DECIMAL ± 0.003		NAME / DATE
Los Alamos NATIONAL LABORATORY EST. 1943	MATERIAL FR-4 w 1 oz copper	DRAWN	WALT 11/6/2013
	FINISH	CHECKED	
		ENG APPR.	
		MFG APPR.	
LOS ALAMOS NATIONAL LABORATORY LOS ALAMOS, NM, 87545	QUANTITY REQUIRED 1	Q.A.	
		COMMENTS:	

hexagon-field-cage-panel-w-slits-mini2
(modification to existing field cage panel)

SIZE	DWG. NO.	REV.
B	126Y-1766708-27	A
SCALE:1:5	WEIGHT:	SHEET 2 OF 2