REVISIONS			
REV.	DESCRIPTION	DATE	APPROVED
A	ADDED ADDITIONAL 6 1/4" THRU HOLES AND 2 TABS	5/23/2013	WS

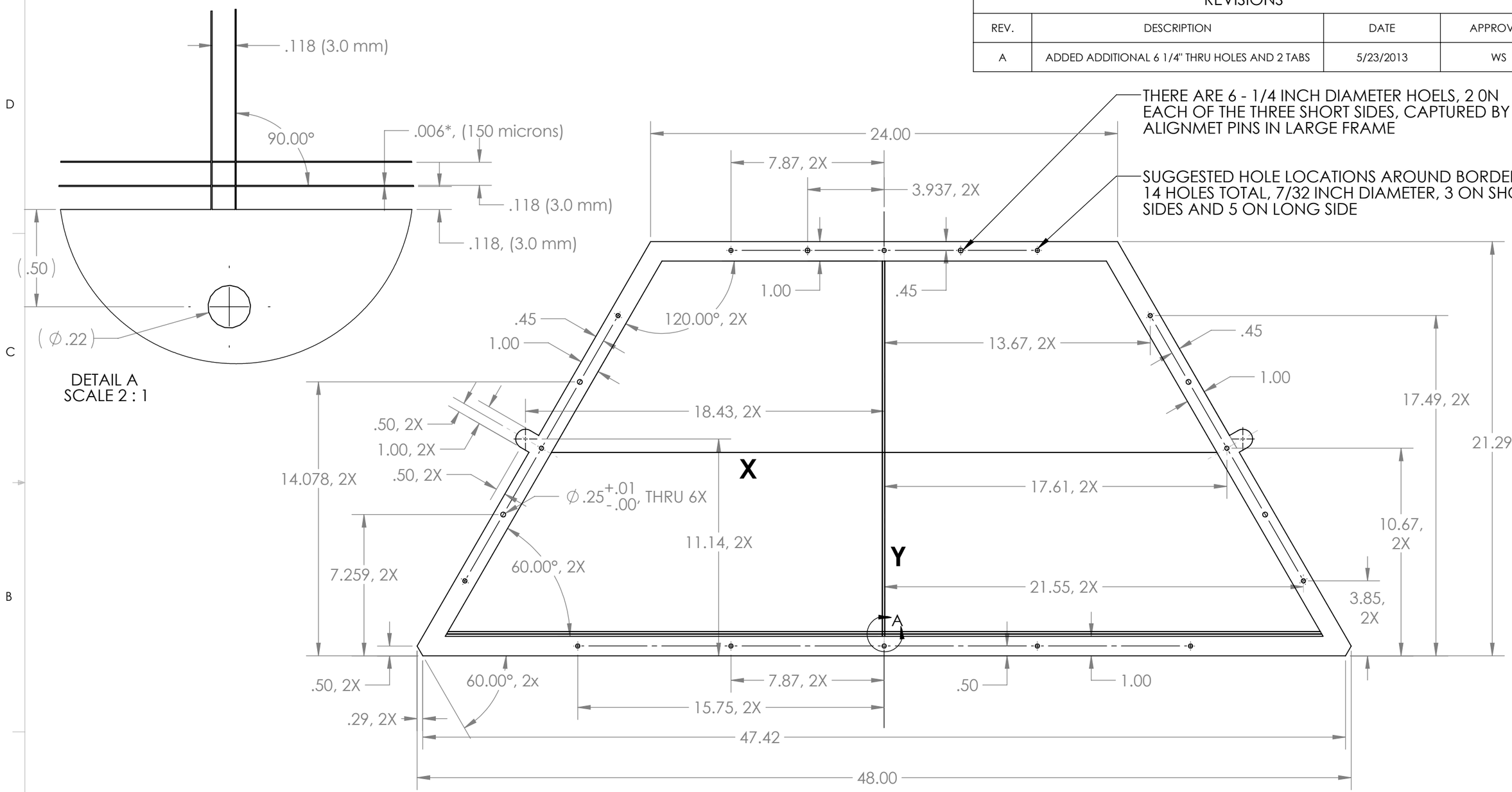

ALL DIMENSIONS IN INCHES

*THICKNESS OF GRID LINES IS DETERMINED BY VENDOR

MATERIAL 304 STAINLESS STEEL FOIL .006in THICK. A CHEMICAL ETCHED X-Y GRID PATTERN IS REQUIRED ON A 3.0 x 3.0 MM SQUARE PATTERN. THE WIDTH OF THE LINES (WIRES) IS 150 MICRONS OR .006 in.

P-25
SUBATOMIC PHYSICS

Los Alamos NATIONAL LABORATORY EST. 1943

LOS ALAMOS NATIONAL LABORATORY
LOS ALAMOS, NM, 87545

DIMENSIONS ARE IN INCHES
TOLERANCES UNLESS SPECIFIED:
FRACTIONAL ±
ANGULAR: MACH ± BEND ±
TWO PLACE DECIMAL ± 0.01
THREE PLACE DECIMAL ± 0.003

MATERIAL
304 STAINLESS STEEL FOIL

FINISH

QUANTITY REQUIRED
1

	NAME	DATE
DRAWN	WALT	4/16/13
CHECKED		
ENG APPR.		
MFG APPR.		
Q.A.		

COMMENTS:

half-etched-grid

(126Y-1766724)

SIZE B | DWG. NO. 126Y-1766708-23 | REV. A

SCALE: 1:5 | WEIGHT: | SHEET 1 OF 1