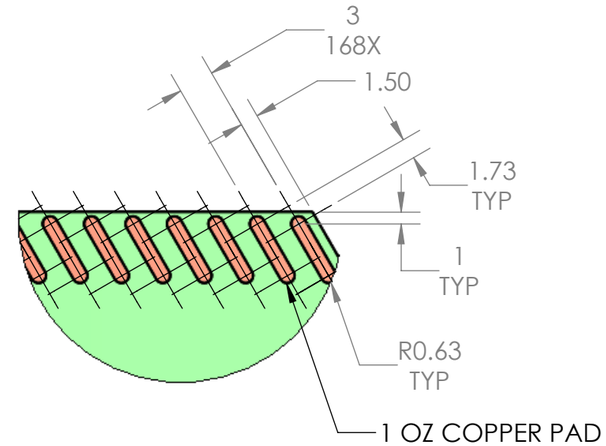

DETAIL A
SCALE 2 : 1

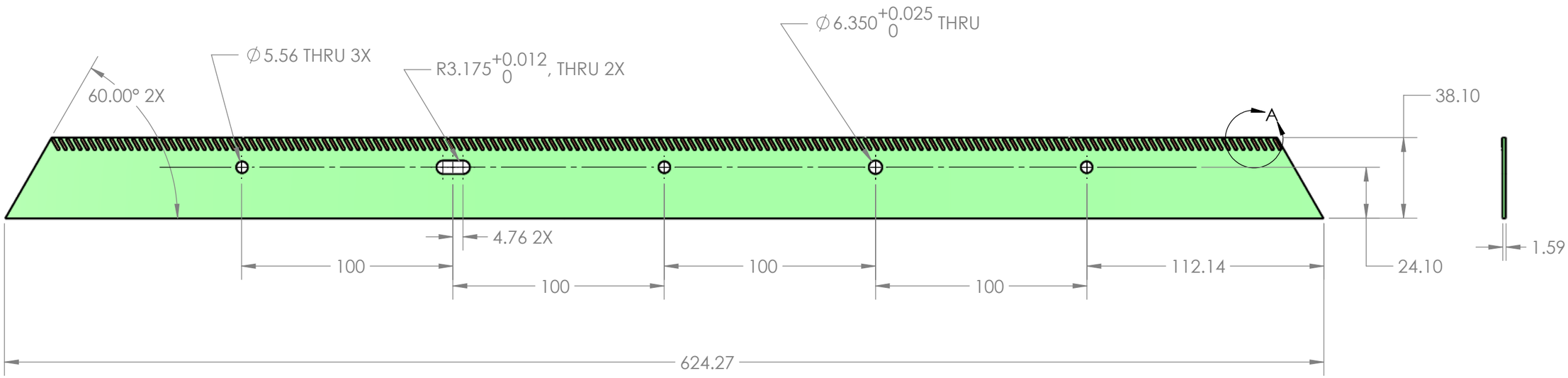

ALL DIMENSIONS IN MILLIMETERS

P-25 SUBATOMIC PHYSICS Los Alamos NATIONAL LABORATORY EST. 1943 LOS ALAMOS NATIONAL LABORATORY LOS ALAMOS, NM. 87545	DIMENSIONS ARE IN INCHES TOLERANCES UNLESS SPECIFIED: FRACTIONAL ± ANGULAR: MACH ± BEND ± TWO PLACE DECIMAL ± 0.01 THREE PLACE DECIMAL ± 0.003		NAME	DATE
		DRAWN	WALT	1/2/13
		CHECKED		
		ENG APPR.		
		MFG APPR.		
	MATERIAL FR-4 & 1 OZ COPPER	Q.A.		
	FINISH	COMMENTS:		
	QUANTITY REQUIRED 1			

hexagonal-xx2-wire-termination-board-mini

SIZE	DWG. NO.	REV.
B	126Y-766708	
SCALE:1:2	WEIGHT:	SHEET 17 OF 22