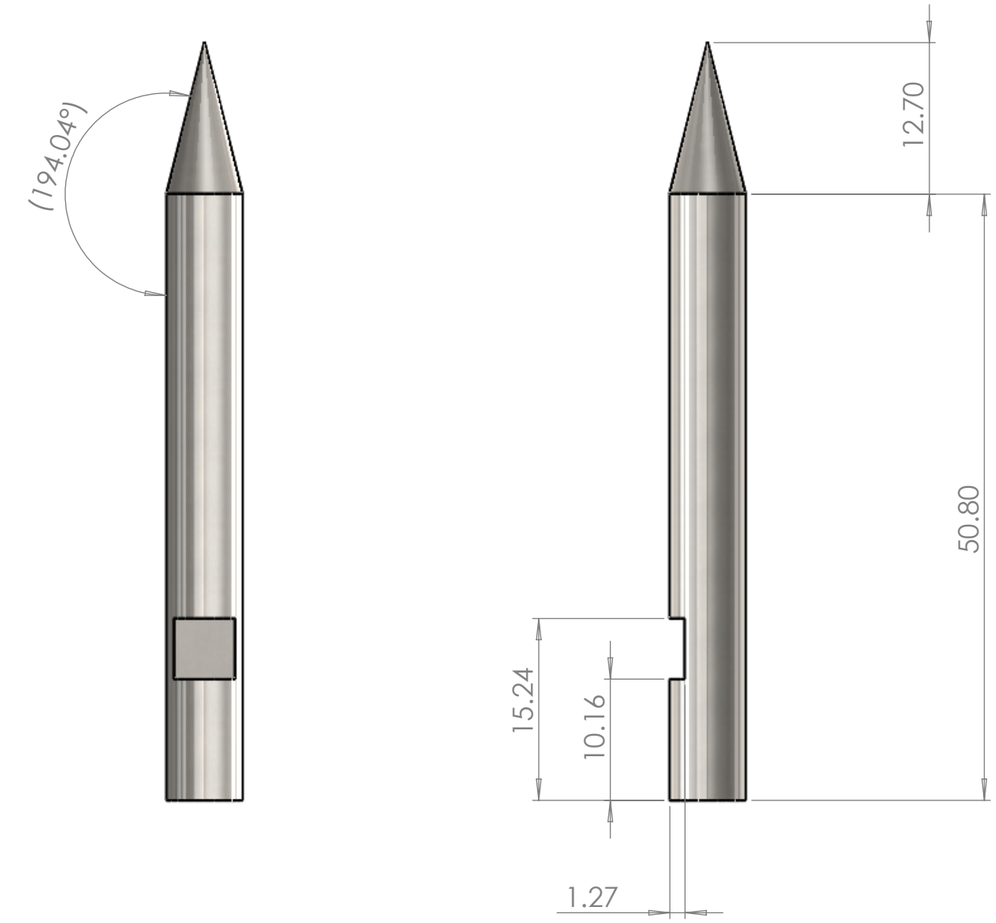

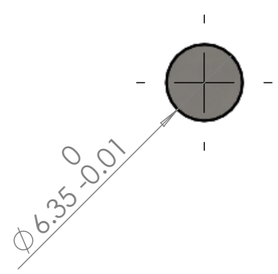

ALL DIMENSIONS IN MILLIMETERS

P-25 SUBATOMIC PHYSICS	DIMENSIONS ARE IN INCHES TOLERANCES UNLESS SPECIFIED: FRACTIONAL ± ANGULAR: MACH ± BEND ± TWO PLACE DECIMAL ± 0.01 THREE PLACE DECIMAL ± 0.003		NAME / DATE
		DRAWN	WALT 12/21/12
		CHECKED	
		ENG APPR.	
		MFG APPR.	
Los Alamos NATIONAL LABORATORY EST. 1943	MATERIAL 304 STAINLESS STEEL	Q.A.	
	FINISH	COMMENTS:	
LOS ALAMOS NATIONAL LABORATORY LOS ALAMOS, NM, 87545	QUANTITY REQUIRED 1		

alignment-pin

SIZE	DWG. NO.	REV.
B	126Y-1766708	
SCALE:2:1	WEIGHT:	SHEET 9 OF 22