REVISIONS			
REV.	DESCRIPTION	DATE	APPROVED
A	ADDED HALF ETCHED GRIDS	6/6/2013	WS

ITEM NO.	PART NUMBER	SHEET #	QTY.
1	field-cage-w-support-frames-mini assembly	2	1
2	wire-plane-no-connectors assembly	3	1
3	wire-plane-1-mini assembly	4	3
4	2m-hexagonal-support-frame-w-bolt-on-lugs	5	2
5	FNAL-purity-monitor-444332	6	1
6	alignment-pin	9	12
7	alignment-pin-shorty	10	12
8	half-etched-grid	8	6
9	BNL-support-to-frame	23	12

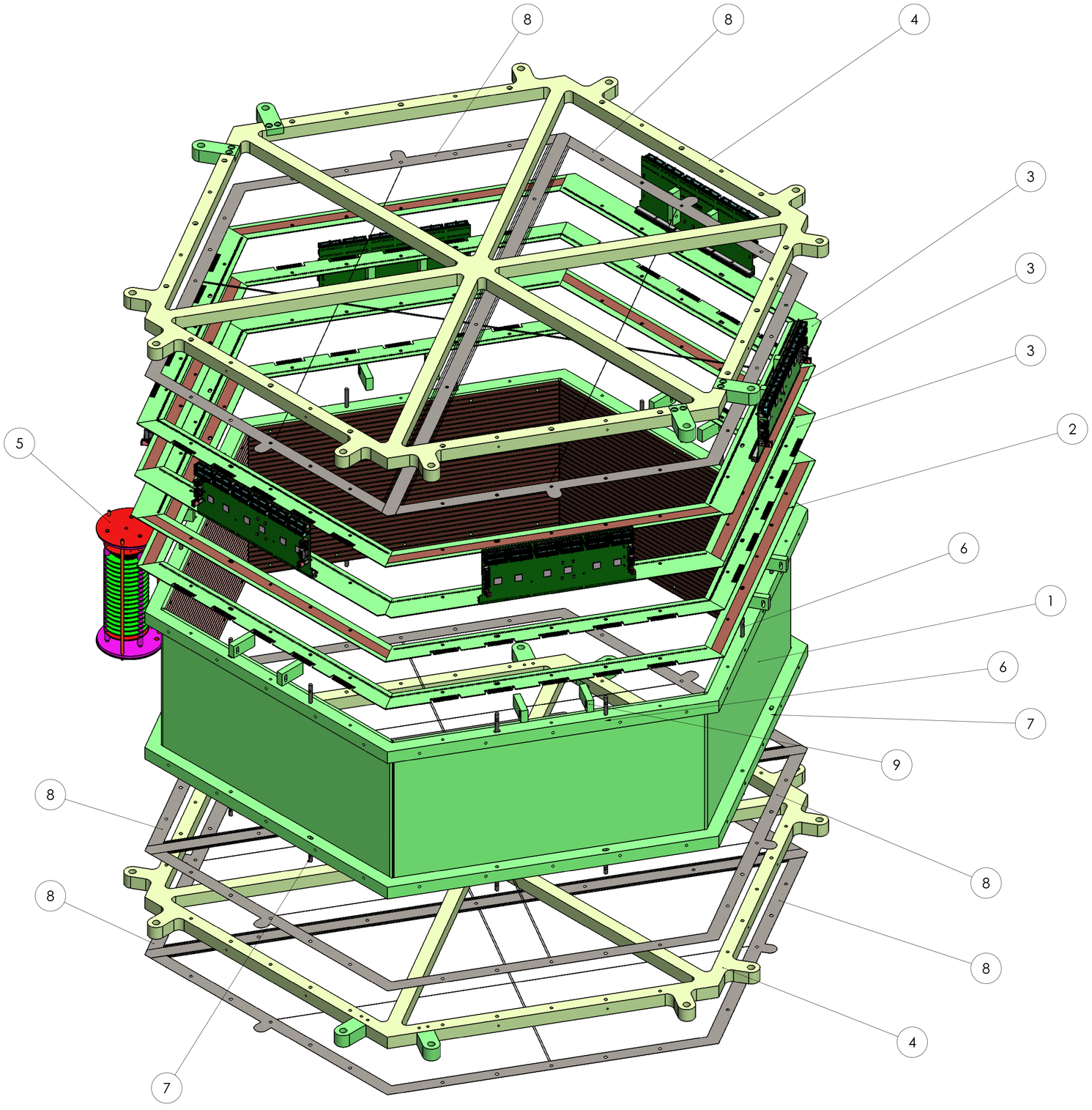

SCALE 1:3

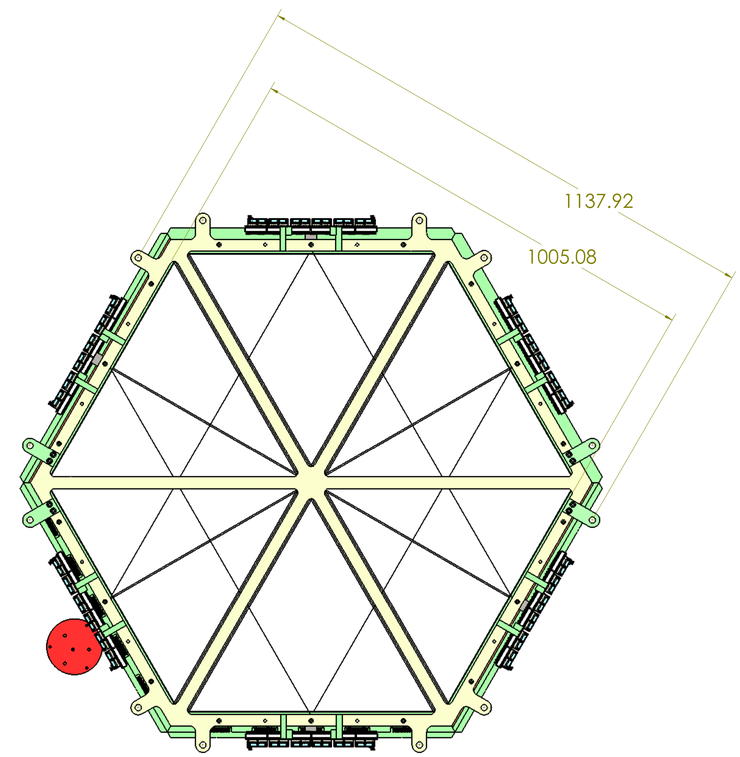

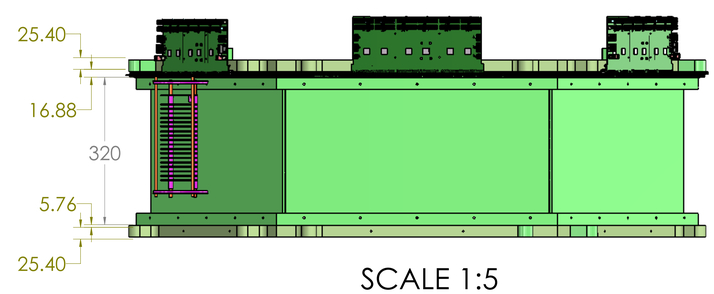

SCALE 1:5

ALL DIMENSIONS IN MILLIMETERS

P-25 SUBATOMIC PHYSICS

Los Alamos NATIONAL LABORATORY EST. 1943

LOS ALAMOS NATIONAL LABORATORY P.O. BOX 1663, LOS ALAMOS, N.M. 87545

DIMENSIONS ARE IN INCHES UNLESS OTHERWISE SPECIFIED
FRACTIONAL ±
ANGULAR: MACH ± BEND ±
TWO PLACE DECIMAL ± 0.01
THREE PLACE DECIMAL ± 0.003

	NAME	DATE
DRAWN	WALT	4/18/13
CHECKED		
ENG APPR.		
MFG APPR.		
Q.A.		

MATERIAL: MIXED

COMMENTS: Updated connector position, added pre-amp boards #10

FINISH:

QUANTITY REQUIRED: 1

Mini-LAr-tpc

SIZE: E | DWG. NO. 126Y-1766708 | REV. A

SCALE: 1:3 | WEIGHT: | SHEET 1 OF 23