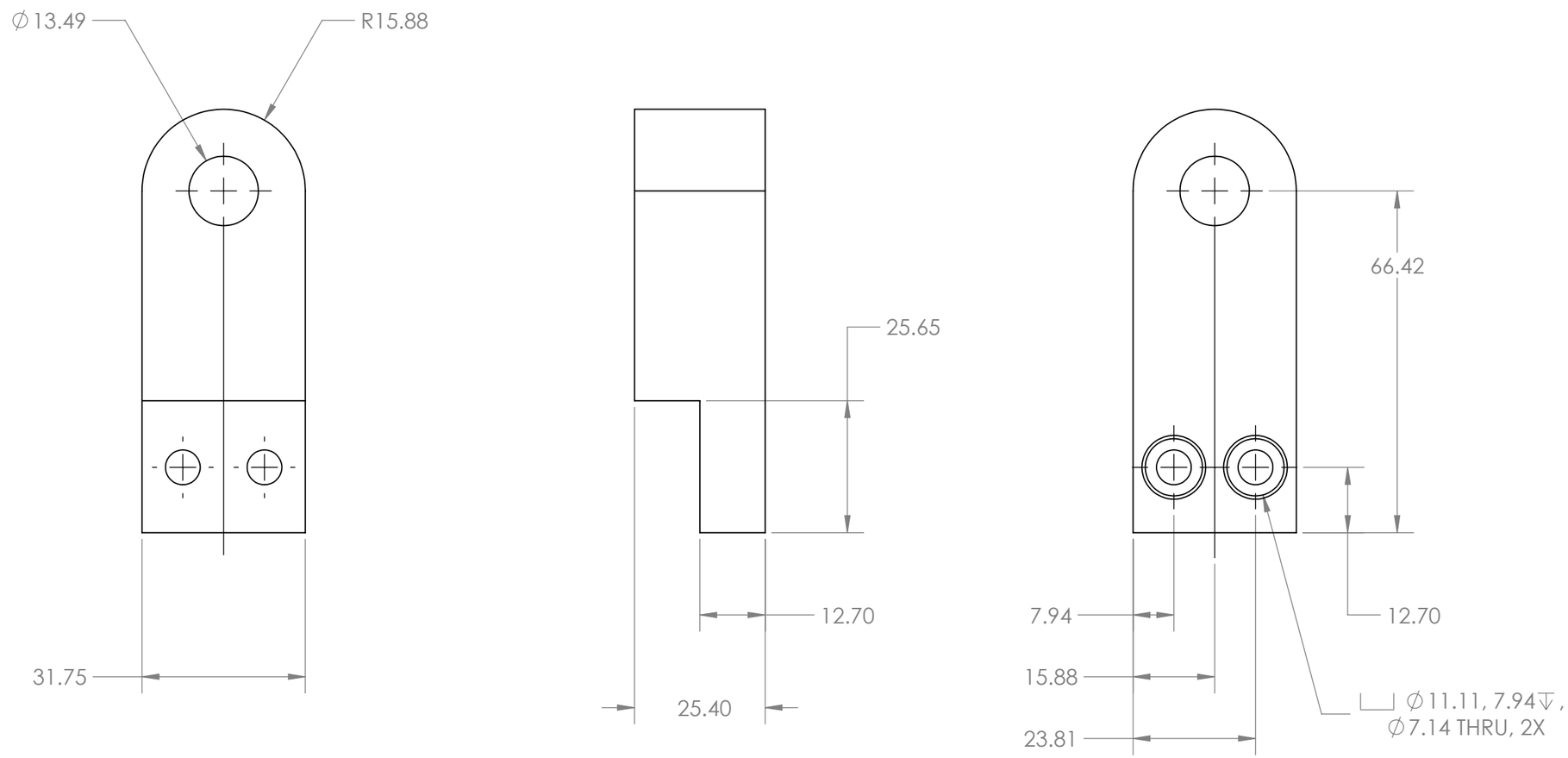

ALL DIMENSIONS IN MILLIMETERS

MAT'L: FR-4, EXCESS FROM MACHINES PLATES

P-25
SUBATOMIC PHYSICS

Los Alamos NATIONAL LABORATORY EST. 1943

LOS ALAMOS NATIONAL LABORATORY
LOS ALAMOS, NM, 87545

DIMENSIONS ARE IN INCHES
TOLERANCES UNLESS SPECIFIED:
FRACTIONAL ±
ANGULAR: MACH ± BEND ±
TWO PLACE DECIMAL ± 0.01
THREE PLACE DECIMAL ± 0.003

MATERIAL: FR-4

FINISH

QUANTITY REQUIRED: 1

	NAME	DATE
DRAWN	WALT	5/16/2013
CHECKED		
ENG APPR.		
MFG APPR.		
Q.A.		

COMMENTS:

LANL-tpc-support-frame-bolt-on-lug

SIZE B | DWG. NO. 126Y-766708a | REV.

SCALE:1:1 | WEIGHT: | SHEET 6 OF 22