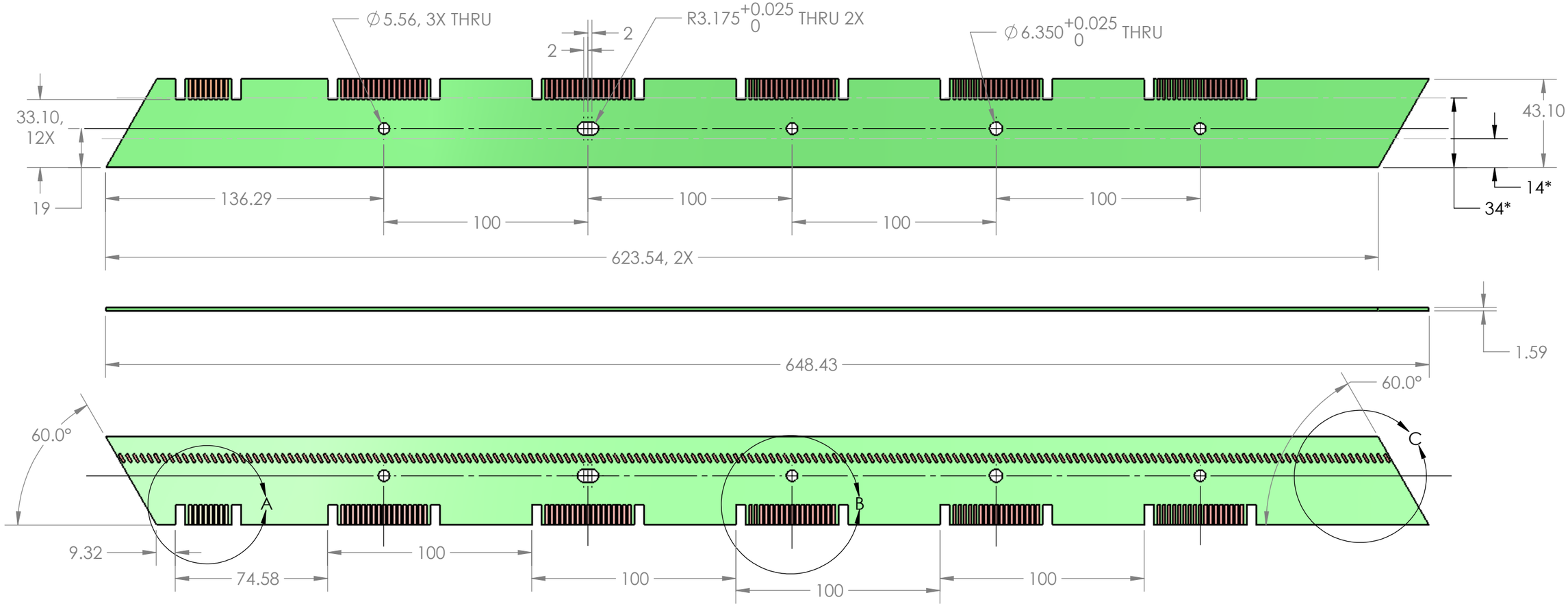

*NOTE THE REGION BETWEEN 14 AND 34 mm FROM THE BOTTOM EDGE, UPPER VIEW (BACKSIDE FROM THE COPPER WIRE PADS), IS THE REGION WHERE FR-4 BACKING PIECES GET LAMINATED. DO NOT PUT COPPER TRACES OR COMPONENTS IN THIS REGION.

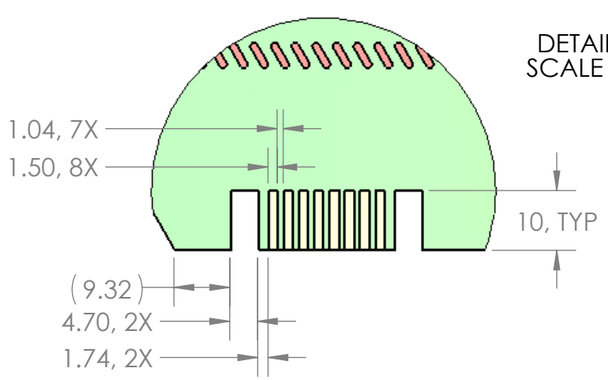

DETAIL A
SCALE 1 : 1

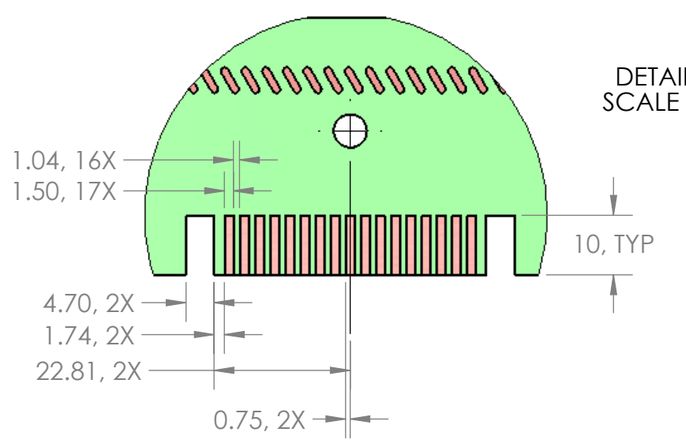

DETAIL B
SCALE 1 : 1

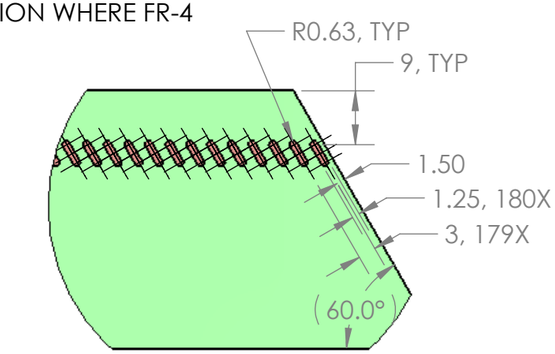

DETAIL C
SCALE 1 : 1

ALL DIMENSIONS IN MILLIMETERS

CARD EDGE CONNECTOR CENTERED UNDER HOLE/SLOT, 5X

P-25
SUBATOMIC PHYSICS

Los Alamos NATIONAL LABORATORY EST. 1943

LOS ALAMOS NATIONAL LABORATORY
LOS ALAMOS, NM, 87545

DIMENSIONS ARE IN INCHES
TOLERANCES UNLESS SPECIFIED:
FRACTIONAL ±
ANGULAR: MACH ± BEND ±
TWO PLACE DECIMAL ± 0.01
THREE PLACE DECIMAL ± 0.003

MATERIAL
1oz COPPER CLAD FR-4

FINISH

QUANTITY REQUIRED
1

	NAME	DATE
DRAWN	WALT	1/3/2014
CHECKED		
ENG APPR.		
MFG APPR.		
Q.A.		

COMMENTS:

hexagonal-xx5-wire-termination-board-grande2

SIZE B | DWG. NO. 126Y-1766755-26 | REV. A

SCALE:1:2 | WEIGHT: | SHEET 1 OF 1