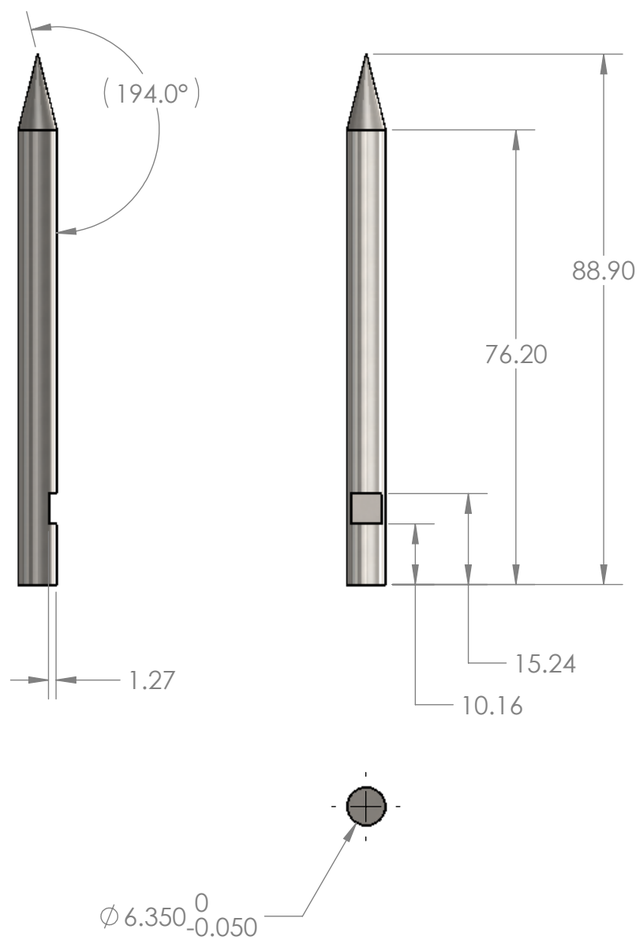

ALL DIMENSIONS IN MILLIMETERS

P-25 SUBATOMIC PHYSICS	DIMENSIONS ARE IN INCHES TOLERANCES UNLESS SPECIFIED: FRACTIONAL ± ANGULAR: MACH ± BEND ± TWO PLACE DECIMAL ± 0.01 THREE PLACE DECIMAL ± 0.003		NAME / DATE
		DRAWN	WALT 2/25/2014
		CHECKED	
		ENG APPR.	
		MFG APPR.	
		Q.A.	
	MATERIAL 304 STAINLESS STEEL	COMMENTS:	
	FINISH		
LOS ALAMOS NATIONAL LABORATORY LOS ALAMOS, NM, 87545	QUANTITY REQUIRED 1		

alignment-pin-captain

SIZE	DWG. NO.	REV.
B	126Y-1766755-47	A
SCALE:1:1	WEIGHT:	SHEET 1 OF 1