REV	REVISIONS DESCRIPTION	DATE	APPROVED

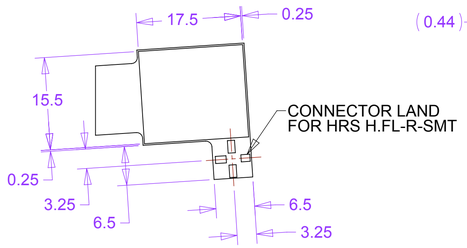

SECTION N-N

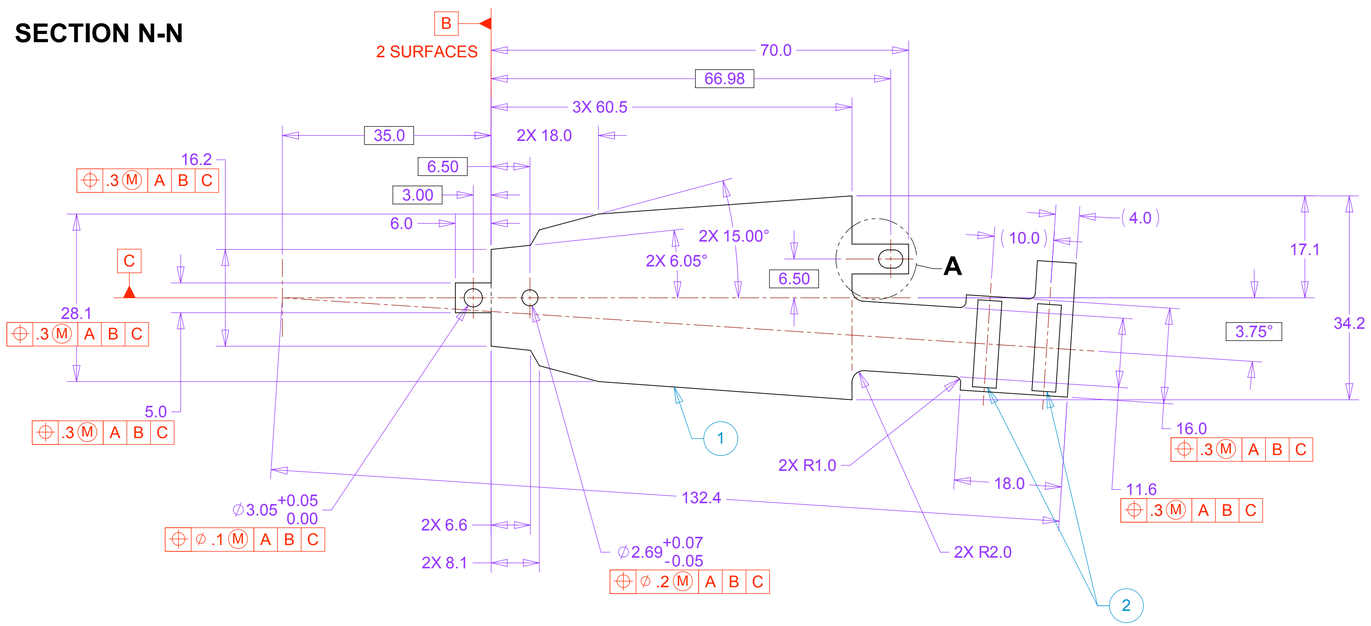

FLAT PATTERN

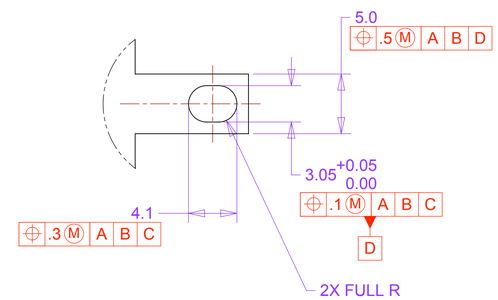

DETAIL A
SCALE 4 : 1

(-1) FVTX STATION 1 HDI - FRONT SIDE

(-3) FVTX STATION 1 HDI - BACK SIDE

SEE SHEET 2

ITEM	QTY	PART NO.	DESCRIPTION	MATERIAL
1	1			Multi Layer Kapton (Currently Unspecified)/Cu Laminate
2	2	DF18C-60DS-0.4V	Hirose Connector Receptacle	
3	1		Connector Backing	

PARTS LIST

NOTES: UNLESS OTHERWISE SPECIFIED

1. ALL DIMENSIONS IN MILLIMETERS
2. DIMENSIONS AND TOLERANCING PER ASME Y14.5M-1994
3. PART NUMBER (DRAWING NO., DASH NO., REVISION NO., SERIAL NO.) TO BE CLEARLY MARKED ON THE PACKAGING BAG OR PART ITSELF.

HYTEC RELEASED DOCUMENT

UNLESS OTHERWISE SPECIFIED:
DIMENSIONS ARE IN MILLIMETERS
-TOLERANCES-

DECIMALS
X = +/- .5
.X = +/- .1
.XX = +/- .01
.XXX = +/- .001

ANGULAR
.X = +/- 30'
.XX = +/- 15'

SURFACE FINISH = 250

FINISH

THIRD ANGLE PROJECTION

PART NO.
111-PHX-02-3603-1

CAD GENERATED DRAWING,
DO NOT MANUALLY UPDATE
DO NOT SCALE DRAWING

	SIGNATURE	DATE
Designer	Roger L. Smith	11/20/2008
Drawn	Roger L. Smith	11/20/2008
Checked	RJ Ponchione	10/15/2009
Engineer	RJ Ponchione	11/20/2008
Approved	RJ Ponchione	10/15/2009

HYTEC, INC

TITLE
PHENIX CENTRAL UPGRADE
FVTX STATION 1
HDI OUTLINE

DWG. NO. 111-PHX-02-3603
SIZE D
SHEET NO. 1 of 2
SCALE 2:1
REVISION

THIS DOCUMENT CONTAINS INFORMATION THAT IS THE PROPRIETARY PROPERTY OF HYTEC, INC. REPRODUCTION, DISCLOSURE, OR RELEASE TO OTHERS, MANUALLY OR ELECTRONICALLY, IS STRICTLY PROHIBITED WITHOUT THE PRIOR WRITTEN CONSENT OF HYTEC, INC.

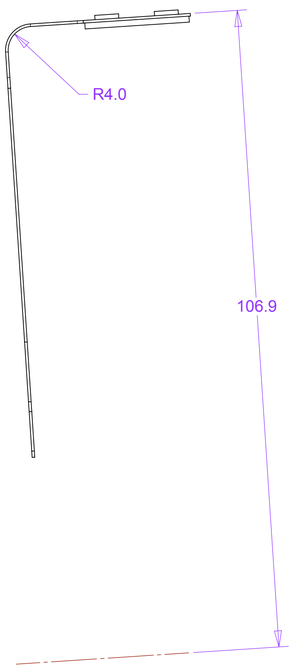

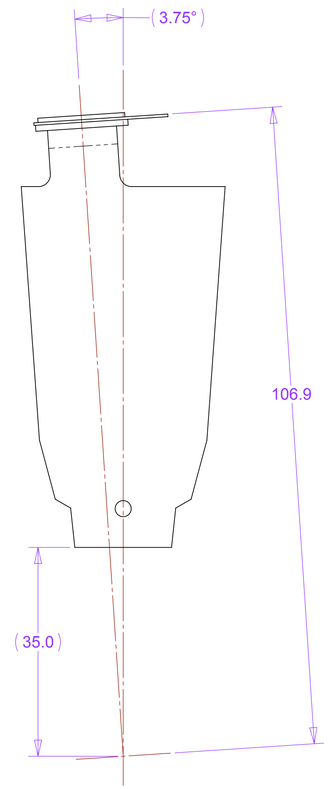

VIEW C-C

(-1) FVTX STATION 1 HDI - FRONT SIDE

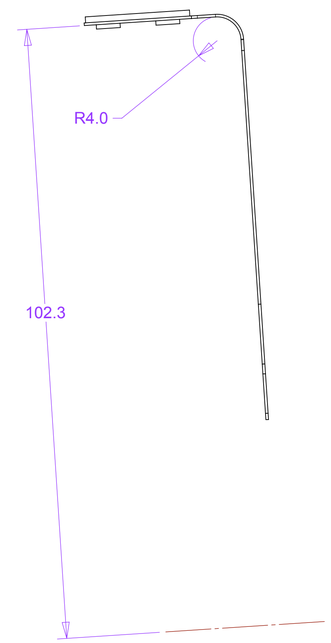

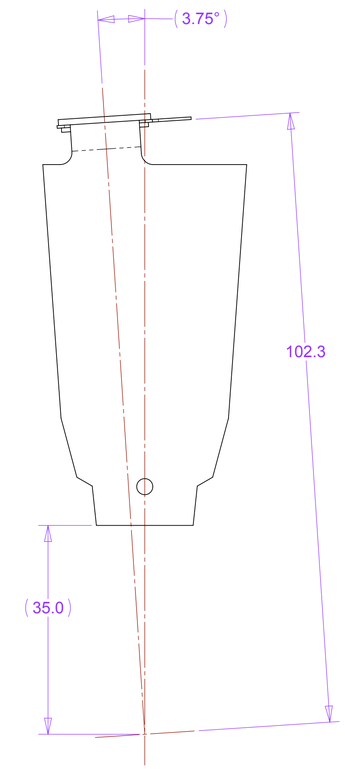

VIEW B-B

(-3) FVTX STATION 1 HDI - BACK SIDE

HYTEC RELEASED DOCUMENT

UNLESS OTHERWISE SPECIFIED:
DIMENSIONS ARE IN MILLIMETERS
-TOLERANCES-

DECIMALS
X = +/- .5
.X = +/- .1
.XX = +/- .01
.XXX = +/- .001

ANGULAR
.X = +/- 30'
.XX = +/- 15'

SURFACE FINISH = 250

FINISH

THIRD ANGLE PROJECTION

PART NO.
111-PHX-02-3603-1

CAD GENERATED DRAWING,
DO NOT MANUALLY UPDATE
DO NOT SCALE DRAWING

	SIGNATURE	DATE
Designer	Roger L. Smith	11/20/2008
Drawn	Roger L. Smith	11/20/2008
Checked	RJ Ponchione	10/15/2009
Engineer	RJ Ponchione	11/20/2008
Approved	RJ Ponchione	10/15/2009

HYTEC, INC

TITLE
PHENIX CENTRAL UPGRADE
FVTX STATION 1
HDI OUTLINE

DWG. NO. 111-PHX-02-3603
SIZE D
SHEET NO. 2 of 2
SCALE 2:1
REVISION

THIS DOCUMENT CONTAINS INFORMATION THAT IS THE PROPRIETARY PROPERTY OF HYTEC, INC.
REPRODUCTION, DISCLOSURE, OR RELEASE TO OTHERS, MANUALLY OR ELECTRONICALLY,
IS STRICTLY PROHIBITED WITHOUT THE PRIOR WRITTEN CONSENT OF HYTEC, INC.