# A New Search for the Neutron Electric Dipole Moment

## Report: Cost and Schedule

Prepared
by
The Neutron EDM Collaboration

February 4, 2005

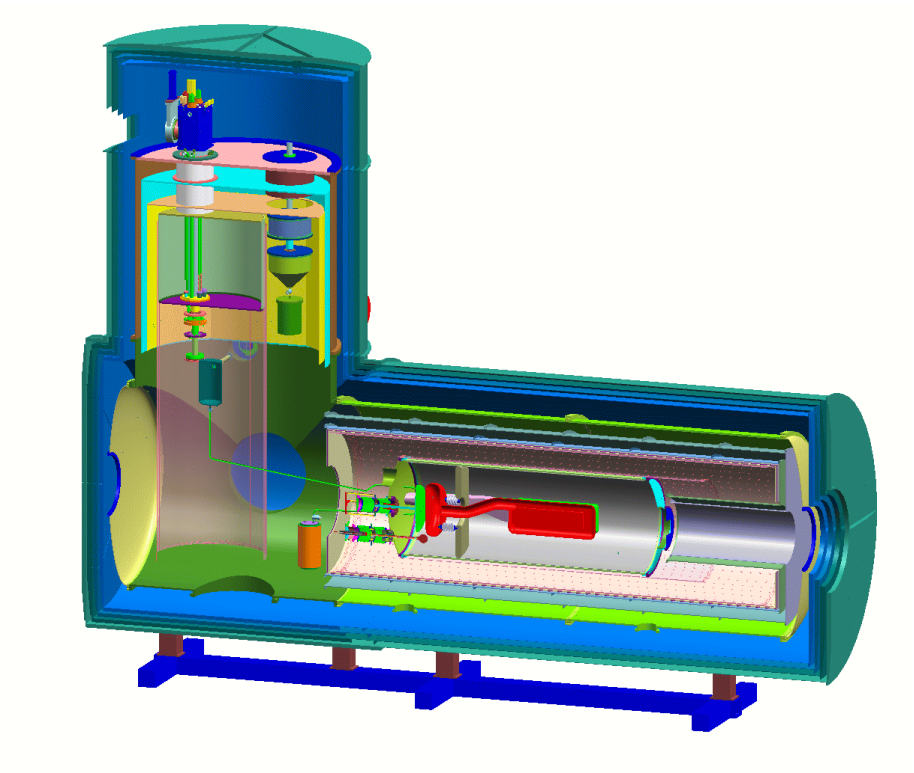

This report has been submitted to:
The LANL Internal EDM Committee:
Review of Cost and Schedule

LANL Committee Meeting: February 11, 2005

## Introduction

The opportunity to construction an apparatus to measure the neutron electric dipole moment (EDM) with two orders of magnitude increased sensitivity was presented by this collaboration in a document submitted in March 2002 to the DOE and NSF as a pre-proposal. In the current report we make a new assessment of the cost and schedule for the construction project based on the lessons learned from our R&D program. The information has been gathered from the collaboration and collated into a Microsoft Project (MP) document. The project has been segmented into a work breakdown structure (WBS). The collaboration was asked to submit their information regarding the WBS elements in a format that has been quite successful in developing the baseline for the fundamental neutron science beam (FNSB) of the Spallation Neutron Source under construction at Oak Ridge National Laboratory. A subset of the features of MP has been used to establish the summary information needed to describe the EDM construction plan.

The first part of what follows is a description of the methodology that is crucial to achieving a believable construction plan. Hence, a complete recounting of the assumptions and techniques is presented. The methodology employed is unconstrained by external conditions such as the availability of funds.

The second part summarizes the results. The top level of WBS costs, a funding profile, average contingency, etc. are reported. The key result is that the total project cost including contingency and escalation is $15M spread over 5 fiscal years.

## Methodology

The EDM collaboration has formulated a reference design for the experiment based on the physical principles needed to execute the measurement with the desired sensitivity and the constraints imposed by creating a single apparatus that embodies all those principles in a constructible and serviceable way. The device is quite complicated, and it has been quite challenging to segment the construction into manageable pieces. This WBS has developed since the version formulated in the 2002 pre-proposal and now reflects the evolution of ideas for construction of the apparatus.

The WBS is carried out to level 3, a much less extensive breakout than would be necessary for execution of the construction project. Nevertheless, there are 213 elements, and that number has been deemed sufficient for a preliminary review. The schedule naturally divides into two periods: the first is the construction of all the subassemblies; the second is the assembly of the experiment and commissioning. A selected subset of the tasks is only defined at level two because they are of limited complexity. The more complex subassemblies are divided in three linked parts: *design, procure, and install*. They are usually linked tasks. *Design* includes the effort for the scientists to specify the element, *e.g.* to calculate the magnetic field uniformity for the geometry, and for the engineer to translate those specifications into shop drawings. *Procure* means the time and effort to build the object. *Install* is the effort to assemble the manufactured parts and

merge the component into the next larger item. Stand alone testing and in-field modifications take place at this step, which is usually heavy on technician time.

The guidelines to the collaboration state that, throughout the entire WBS, the effort of graduate students, postdocs, staff, and faculty is entered as zero cost but impacts the schedule, while the cost of engineers and technicians must be included. This division of labor between scientific operating and construction funds is compatible with DOE policies. If the item is made commercially, the total cost is allowable. If it is constructed at a collaborating institution, the rules for personnel above apply.

As stated, the EDM collaboration employed the philosophy used to baseline the FSNB. A list of jobs is generated to accomplish the task, noting whether it is procurement or a labor cost. The labor rate for engineers, high level technicians and moderate level technicians are standardized at $79, $54 and $40 per hour, respectively. These hourly rates are the sum of salary and fringe benefits at Los Alamos National Laboratory before overhead is added, and they are comparable to national market rates. The tasks were identified by whether they could be carried out at a university or required the facilities of a national laboratory. University tasks had an overhead of 50% on salaries and 0% on procurements. National laboratory tasks had an overhead of 100% on salaries and 13% on procurements.

A WBS dictionary has been collated for all the lowest level tasks to document the scope of work and the basis for the estimate.

Contingency is calculated according to technical, cost and schedule risk as defined by the table in the Appendix A. The jobs are multiplied by their respective overhead rates and summed together with the contingency to get the total cost. The duration of the task is derived from the hours charged modulated by whether the jobs are done in parallel or in series. Procurements from outside vendors are charged as single costs with specified delivery times that are entered as duration. Somewhat arbitrarily, the float is calculated as the duration multiplied by the contingency in the belief that time is money.

The four quantities (total cost, % contingency, duration, and float) are entered into the WBS in MP. The mathematical formulae that generate the entries give more precision than is warranted; the least significant figures have no meaning within the stated contingency. The linkage between the tasks is quite complicated and can be further optimized before the project has a baseline review, but the complexity of the links was limited because the design is not fully specified. The linkage and duration of tasks produce a Gantt chart that displays the interrelation in the schedule between tasks and illustrates the project in a graphical format. The project layout is attached as Appendix B. The task duration shows up as the length of the bars. The float time is hidden in minimal times, known as lag in MP parlance, for the interconnecting lines between the tasks. Our knowledge of the personnel available to the EDM collaboration is sufficiently vague that no attempt has been made to resource load the tasks through the assignment of people.

The project starts at the beginning of fiscal 2007, the earliest beginning consistent with DOE guidance. The end time is totally unconstrained by anything other than the anticipated time to carry out the tasks. The critical path is highlighted in red. In our case, a number of level 2 items are very close to having the same total duration, so slight adjustments to the times have been made so that the program highlights them all. The end of each level 1 task is denoted with a milestone. These milestones occur at about the same time because most of them are associated with completing the major components for the final assembly into the full experiment. A more complicated WBS needed for establishing a baseline would very likely have a milestone at the end of every bar on this Gantt chart.

With the critical path established, tasks that have plenty of free float can have their start delayed to produce a reasonable funding profile. The funding profile is a standard report from MP. Note that MP uses the time of payment for items purchased from commercial vendors in calculating the funding profile. The large cost of many items, even if they are manufactured in a machine shop, may cause them to be treated as capital purchases where the money must be set aside at the beginning of production. Our funding profile is based on prorating the payment uniformly over the procurement, and that assumption may have introduced some uncertainty into the calculated result.

The funding profile before inflation can be used to calculate the escalation costs. The project entries are in FY'05 dollars. To go to "then year" dollars, a multiplicative factor of 1.025, i.e. 2.5%/yr, has been employed. The escalation is documented as the final WBS elements in the project.

The project manager, the project engineer and the escalation constitute three disconnected tasks. The project manager will work 40%-time to maintain the MP file, to track earned value, to notify the spokespersons of impending problems, and to prepare reports to the funding agencies. This individual is expected to join the effort before the project begins, become part of the project after commencement and stay until operations are underway. The project engineer functions throughout the life of the project, also spending about half time in this role. The spokespersons will provide technical oversight and perform liaison amongst the collaboration members, but they are expected to be largely technical workers and are not charged to the project but to institutional operating funds.

**Financial and Schedule Summary**

The following summary has been taken from the WBS displayed to level 3. These costs are only for the construction project and do not include any DOE R&D or institutional development funds. No distinction has been made between construction and pre-operating funds. For more details, refer to Appendix B. The intention is to give a short overview of the project. For example, it is clear that the biggest single cost is for cryogenics at $4.8 M.

The full cost of the EDM experiment is $15.1 M including the escalation from FY'05 dollars to "then-year" dollars for the period from FY'07 through FY'11. To compare to the pre-proposal, the biggest increases are the use of the full-size neutron-beam splitter (~1200 k), the inclusion of a second dilution refrigerator (~800k), the addition of the dressed-spin coils (~200 k), and the escalation from FY'02 dollars to FY'05 dollars (~900 k). The cost of many other items has gone up and down with the result that the overall cost of the majority of the components is more or less constant. The rolled up costs for the level 2 and level 1 tasks are shown in Table 1.

Table 1 – Level 2 and Level 1 cost for project elements. The simpler subsystems have their unrolled cost suppressed.

| WBS | Task | Level 2 Cost | Level 1 Cost |
|---|---|---|---|
| | | | |
| 1 | Neutron Beam Line | | $1,853,580 |
| 1.1 | Bi Filter | $0 | |
| 1.2 | Beam Splitter | $1,721,734 | |
| 1.3 | Spin Flippers | $131,846 | |
| 2 | Shielding | $119,537 | $119,537 |
| 3 | Cryogenics | | $4,797,537 |
| 3.1 | Gas Handling Controls | $43,600 | |
| 3.2 | Upper Cryostat & Radiation Shields | $993,910 | |
| 3.3 | 4He Purifier | $261,080 | |
| 3.4 | Polarized 3He Storage Volume | $149,674 | |
| 3.5 | Lower Cryostat & Radiation Shields | $869,145 | |
| 3.6 | Drain Volumes & Bellows | $97,551 | |
| 3.7 | Support Equipment | $329,727 | |
| 3.8 | 4He Refrigeration System | $1,239,982 | |
| 3.9 | Second Dilution Refrigerator | $802,755 | |
| 3.10 | Gases and Cryogens (3He, LHe, LN2) | $10,113 | |
| 4 | 3He Atomic Beam Source Interface | $139,218 | $139,218 |
| 5 | Magnetic Shielding | | $1,372,468 |
| 5.1 | 5 Layer Conventional Shields | $1,001,097 | |
| 5.2 | Superconducting Shields | $142,800 | |
| 5.3 | Ferromagnetic Shields | $79,056 | |
| 5.4 | Other Magnetic Shielding | $100,440 | |
| 5.5 | Magnetic Penetrations | $49,075 | |
| 6 | Magnets | | $809,701 |

| | | | |
|---|---|---|---|
| 6.1 | Constant Field Coil | $173,342 | |
| 6.2 | Constant Field Coil Power Supply | $58,320 | |
| 6.3 | pi/2 Coil | $29,587 | |
| 6.4 | pi/2 Coil Power Supply | $12,960 | |
| 6.5 | Dressed Spin Coils | $202,286 | |
| 6.6 | Dressed Spin Coil Power Supplies | $25,920 | |
| 6.7 | 3He Spin-Holding Coil | $173,342 | |
| 6.8 | 3He Spin Holding Coil Power Supply | $12,960 | |
| 6.9 | Field Monitors | $120,984 | |
| 7 | High Voltage | $237,989 | $237,989 |
| 8 | Measuring Cells | | $1,017,248 |
| 8.1 | Cells | $152,979 | |
| 8.2 | Valves | $812,026 | |
| 8.3 | Coatings | $52,243 | |
| 9 | SQUIDs | $77,003 | $77,003 |
| 10 | Light System | $149,966 | $149,966 |
| 11 | Electronics / Computers | $377,524 | $377,524 |
| 12 | Conventional Construction | | $1,275,989 |
| 12.1 | Platforms | $159,877 | |
| 12.2 | Electrical Plant | $298,970 | |
| 12.3 | Plumbing | $340,340 | |
| 12.4 | Mechanical Supports | $456,914 | |
| 12.5 | Counting House | $19,888 | |
| 13 | Management | | $1,005,652 |
| 13.1 | Project Manager - 2 days/wk | $282,639 | |
| 13.2 | Project Engineer - 2.5 days/wk | $723,013 | |
| 14 | Integration and Commissioning | | $616,205 |
| 14.1 | Integration | $531,120 | |
| 14.2 | Commissioning | $85,085 | |
| 15 | Escalation - 2.5%/yr | $1,258,000 | $1,258,000 |

The 8.9-A beam at the FNSB includes in its baseline an m=3.5 guide to go from the end of the biological shield to the edge of the guide hall. The splitter occupies the same space. When all the uses of the beam are evaluated, there could be some cost savings between the two projects if duplication can be avoided. Another possible savings that has not been taken into account is the construction cost of parts produced as prototypes during the R&D program. For example, the atomic beam polarizer built for tests will end up in the final measurement apparatus. Some others items, such as the $^3$He purifier, could work out as final instruments as well.

MP provides a utility to evaluate the funding profile necessary to pay for construction of the experiment. The result is shown in Table 2. The start times for a number of WBS elements are delayed to push their funding to later years. The delayed elements are in no case particularly close to the critical path. As noted in the last section, most items are to be paid for on a prorated schedule. A graphical display of Table 2 is shown in Fig. 1.

Tabel 2 – The cost for the EDM experiment broken down by fiscal year.

| Cost | US FY'07 $k | US FY'08 $k | US FY'09 $k | US FY'10 $k | US FY'11 $k |
|---|---|---|---|---|---|
| | | | | | |
| FY'05 Cost | 1,951 | 5,746 | 4,154 | 1,541 | 457 |
| Escalation | 110 | 442 | 431 | 202 | 73 |
| | | | | | |
| Total | 2,061 | 6,188 | 4,585 | 1,743 | 530 |

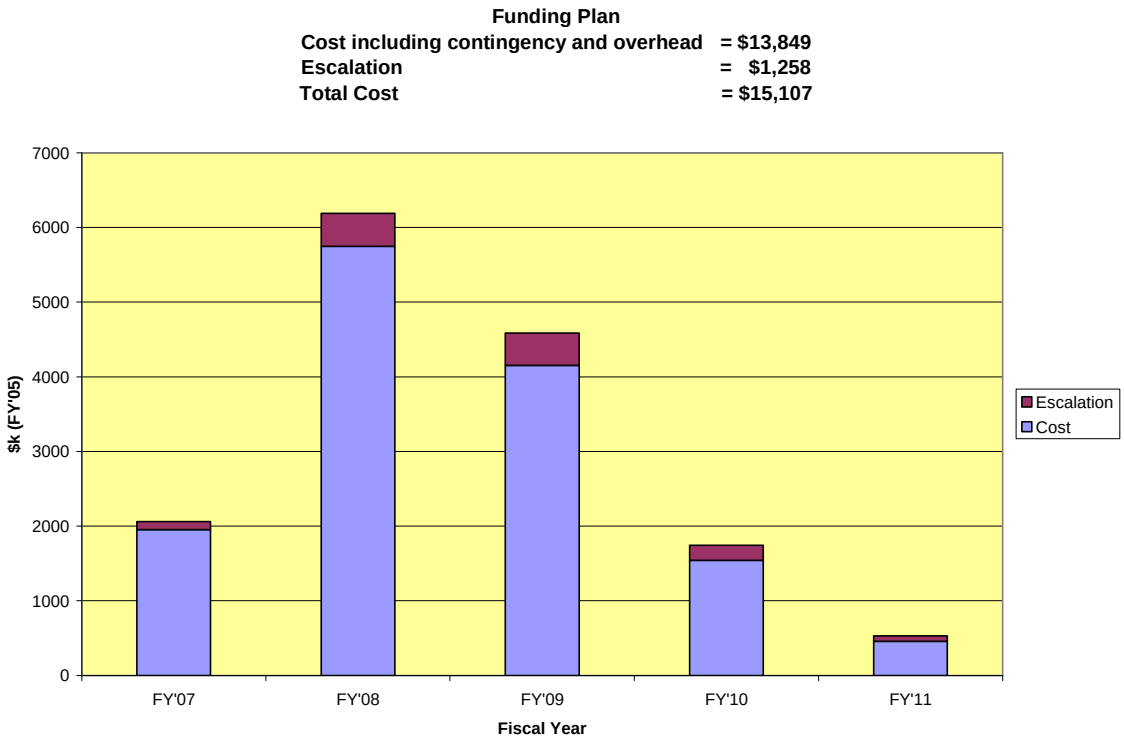


Figure 1. The required funding plan to carry out the EDM experiment with unconstrained input, i.e. no resource limitations.

The individual contingencies have been evaluated according to the prescription in Appendix A. The results are listed in Appendix B. The cost-weighted average contingency is 32.6%, commensurate with the significant uncertainty in the construction cost of an apparatus still in its pre-conceptual design stage.

Using the definition of EDIA as the engineering, design, and integration tasks performed up to the start of buying parts and cutting metal, the total EDIA is $1.9 M. This amount is 12.6% of the total cost.

The duration of the project is slightly under five years. The conclusion of the project will be demarked by the commencement of data taking. The critical path is shown in red on the Gantt chart in Appendix B. A number of elements take the same time within errors. Completion of the upper cryostat and the magnets are critical milestones before the full apparatus can be assembled. The times to build these big pieces of equipment are measured in years. There is no point in listing all the other milestones because they have been adjusted to influence the funding profile. As stated previously, the completion of every bar on this chart will probably become a milestone in the future. This statement is not rigorous, but the typical float is roughly the same as the average contingency, i.e. roughly 1/3.

## Conclusion

The MP project plan presented here is internally consistent in its treatment of construction costs and construction times. Clearly, the conclusions that are drawn from this analysis depend on the quality of the input and the algorithms used. The collaboration has put moderate effort into evaluating the cost and schedule associated with the WBS elements. The results are commensurate with our knowledge of the scope of a project in the pre-conceptual stage.

The EDM collaboration believes that our work provides a good basis to believe that the project can be done within the parameters discussed, i.e. $15 M and five years of construction. We also remain dedicated to achieving the high scientific impact of the experiment, and are determined to build the apparatus, make the measurements, and publish a set of very important scientific results which are relevant to cosmology, the strong-*CP* problem and physics beyond the standard model.

# Appendix A: Contingency

**Technical, cost, and schedule risk factors**

| Technical | Cost | Schedule | Risk factor |
|---|---|---|---|
| Existing design and off-the-shelf hardware | Off-the-shelf or catalog item | | 1% |
| Minor modifications to an existing design | Vendor quote from established drawings | No schedule impact on any other item | 2% |
| Extensive modifications to an existing design | Vendor quote with some design sketches | | 3% |
| New design, nothing exotic | In-house estimate based on previous similar experience | Delays completion of non-critical path subsystem item | 4% |
| New design, different from established designs or existing technology | In-house estimate for item with minimal experience but related to existing capabilities | | 6% |
| New design, requires some R&D but does not advance the state-of-the-art | In-house estimate for item with minimal experience and minimal in-house capability | Delays completion of critical path subsystem item | 8% |
| New design, development of new technology which advances state-of-the-art | Top-down estimate from analogous programs | | 10% |
| New design, way beyond the current state-of-the-art | Engineering judgment | | 15% |

**Technical, cost, and schedule risk weights**

| Technical | Cost | Schedule | Risk weight |
|---|---|---|---|
| | Material cost OR labor rate | Same for all | 1 |
| Design OR manufacturing | Material cost AND labor rate | | 2 |
| Design AND manufacturing | | | 4 |

Instructions:

1. Each WBS element is assigned a contingency.
2. The contingency for each WBS element is a sum of three different risk contributions: *Technical*, *Cost* and *Schedule*.
3. Each risk contribution is calculated as a product of a *Risk Factor* and a *Risk Weight*, values for which are shown in the above two tables.
4. For instance, to calculate the total contingency for a particular WBS element you would first evaluate the technical risk of your cost estimate from the left-hand column of the first table and assign the appropriate *Risk Factor* (1-15%). You would then determine whether that element involves Design AND/OR Manufacturing and assign the appropriate *Risk Weight* (2 or 4). You then multiply these numbers. You would similarly calculate the contingency associated with the cost and schedule risk of the WBS element from the middle and right-hand columns of the above tables. The sum of these contributions is the total contingency.
5. Note: for clarity the cost sheets request the individual risk weights and factors – the calculation of the total contingency is done by the sheet itself.

## Appendix B: Microsoft Project Plan for the EDM Experiment

| ID | WBS | Task Name | Total Cost | % Cont. | Duration | Float |
|---|---|---|---|---|---|---|
| 1 | **1** | **Neutron Beam Line** | **$1,853,580.00** | **0** | **1052 days** | **0 days** |
| 2 | 1.1 | Bi Filter | $0.00 | 0 | 1 day | 0 days |
| 3 | **1.2** | **Beam Splitter** | **$1,721,734.00** | **0** | **662 days** | **0 days** |
| 4 | 1.2.1 | Design Splitter | $90,376.00 | 43 | 88 days | 38 days |
| 5 | 1.2.2 | Procure Splitter | $1,368,982.00 | 43 | 365 days | 157 days |
| 6 | 1.2.3 | Install Splitter | $18,075.00 | 43 | 14 days | 6 days |
| 7 | 1.2.4 | Design Polarizing Magnet | $0.00 | 43 | 255 days | 110 days |
| 8 | 1.2.5 | Procure Polarizing Magnet | $226,226.00 | 43 | 183 days | 79 days |
| 9 | 1.2.6 | Install Polarizing Magnet | $18,075.00 | 43 | 21 days | 9 days |
| 10 | **1.3** | **Spin Flippers** | **$131,846.00** | **0** | **317 days** | **0 days** |
| 11 | 1.3.1 | Design Spin Flippers | $0.00 | 43 | 21 days | 9 days |
| 12 | 1.3.2 | Procure Spin Flippers | $122,808.00 | 43 | 183 days | 79 days |
| 13 | 1.3.3 | Install Spin Flippers | $9,038.00 | 43 | 14 days | 6 days |
| 14 | 1.4 | Beam Line Complete | $0.00 | 0 | 0 days | 0 days |
| 15 | **2** | **Shielding** | **$119,537.00** | **0** | **114 days** | **0 days** |
| 16 | **2.1** | **Beam Line (BL)** | **$14,910.00** | **0** | **44 days** | **0 days** |
| 17 | 2.1.1 | Design BL Shielding | $6,952.00 | 10 | 7 days | 1 day |
| 18 | 2.1.2 | Procure BL Shielding | $4,812.00 | 10 | 30 days | 3 days |
| 19 | 2.1.3 | Install BL Shielding | $3,146.00 | 10 | 3 days | 1 day |
| 20 | **2.2** | **Experiment** | **$104,627.00** | **0** | **106 days** | **0 days** |
| 21 | 2.2.1 | Design Experiment Shielding | $21,804.00 | 15 | 21 days | 3 days |
| 22 | 2.2.2 | Procure Experiment Shielding | $41,055.00 | 15 | 30 days | 5 days |
| 23 | 2.2.3 | Install Experiment Shielding | $41,768.00 | 15 | 52 days | 8 days |
| 24 | 2.3 | Shielding Complete | $0.00 | 0 | 0 days | 0 days |
| 25 | **3** | **Cryogenics** | **$4,797,537.00** | **0** | **1079 days** | **0 days** |
| 26 | **3.1** | **Gas Handling Controls** | **$43,600.00** | **0** | **85 days** | **0 days** |
| 27 | 3.1.1 | Design Gas Handling Controls | $10,087.00 | 14 | 11 days | 2 days |
| 28 | 3.1.2 | Procure Gas Handling Controls | $30,273.00 | 14 | 60 days | 8 days |
| 29 | 3.1.3 | Install Gas Handling Controls | $3,240.00 | 25 | 4 days | 1 day |
| 30 | **3.2** | **Upper Cryostat & Radiation Shields** | **$993,910.00** | **0** | **973 days** | **0 days** |
| 31 | 3.2.1 | Design Upper Cryostat | $214,248.00 | 26 | 301 days | 78 days |
| 32 | 3.2.2 | Procure Upper Cryostat | $575,400.00 | 50 | 274 days | 137 days |
| 33 | 3.2.3 | Install Upper Cryostat | $204,262.00 | 58 | 183 days | 106 days |
| 34 | **3.3** | **4He Purifier** | **$261,080.00** | **0** | **450 days** | **0 days** |
| 35 | 3.3.1 | Design 4He Purifier | $101,184.00 | 36 | 168 days | 61 days |
| 36 | 3.3.2 | Procure 4He Purifier | $103,964.00 | 58 | 122 days | 71 days |

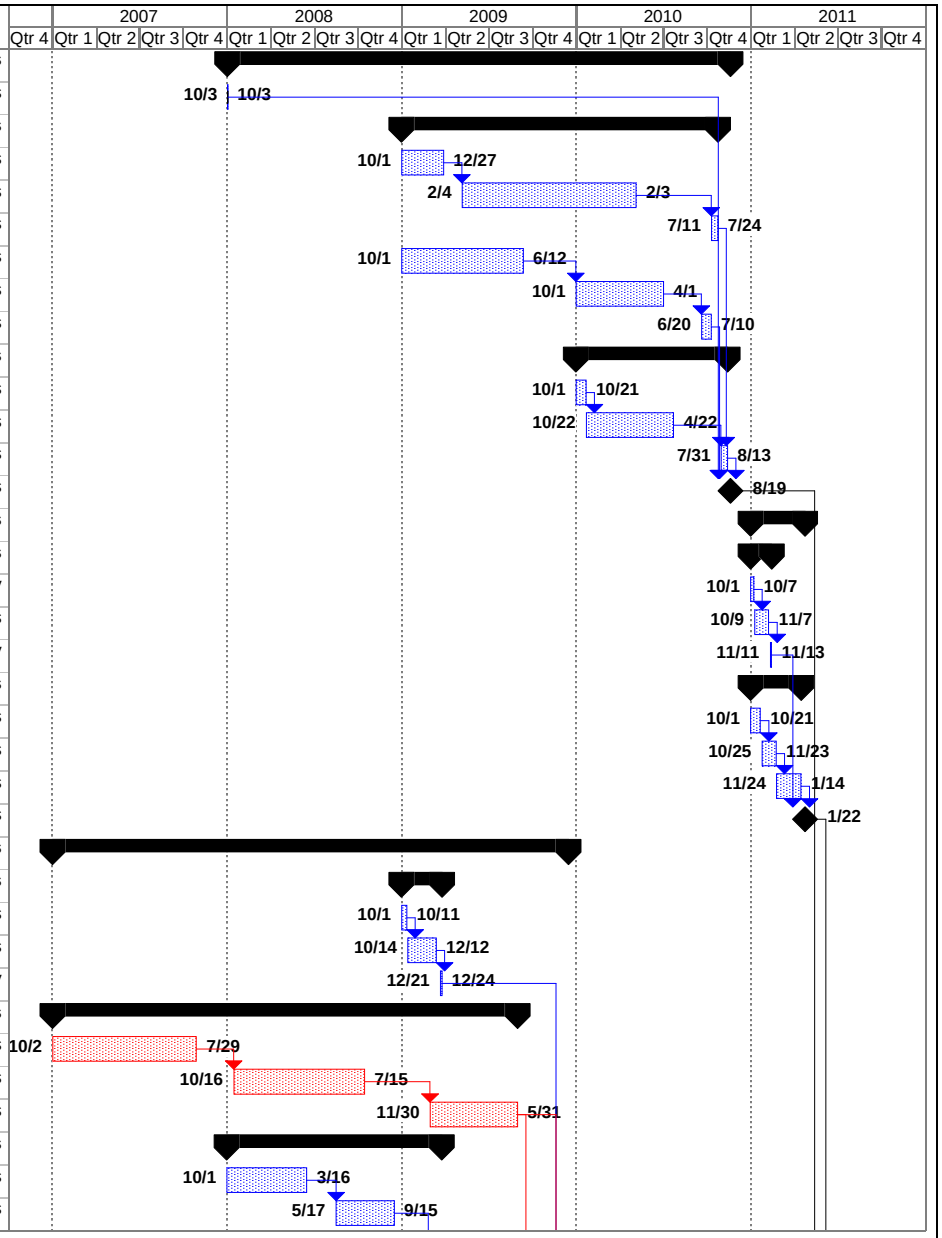


Project: EDM
Date: Thu 2/3/05

| | | | | | | | |
|---|---|---|---|---|---|---|---|
| Task | | Summary | | Rolled Up Progress | | Group By Summary | |
| Critical Task | | Rolled Up Task | | Split | | | |
| Progress | | Rolled Up Critical Task | | External Tasks | | | |
| Milestone | | Rolled Up Milestone | | Project Summary | | | |

| ID | WBS | Task Name | Total Cost | % Cont. | Duration | Float |
|---|---|---|---|---|---|---|
| 37 | 3.3.3 | Install 4He Purifier | $55,932.00 | 58 | 28 days | 16 days |
| 38 | **3.4** | **Polarized 3He Storage Volume** | **$149,674.00** | **0** | **345 days** | **0 days** |
| 39 | 3.4.1 | Design 3He Storage Volume | $54,400.00 | 36 | 119 days | 43 days |
| 40 | 3.4.2 | Procure 3He Storage Volume | $67,308.00 | 58 | 122 days | 71 days |
| 41 | 3.4.3 | Install 3He Storage Volume | $27,966.00 | 58 | 61 days | 35 days |
| 42 | **3.5** | **Lower Cryostat & Radiation Shields** | **$869,145.00** | **0** | **745 days** | **0 days** |
| 43 | 3.5.1 | Design Cryostat | $150,669.00 | 49 | 212 days | 104 days |
| 44 | 3.5.2 | Procure Cryostat | $669,723.00 | 44 | 274 days | 120 days |
| 45 | 3.5.3 | Install Cryostat | $48,753.00 | 49 | 35 days | 17 days |
| 46 | **3.6** | **Drain Volumes & Bellows** | **$97,551.00** | **0** | **134 days** | **0 days** |
| 47 | 3.6.1 | Design Drain Volumes | $38,084.00 | 31 | 32 days | 10 days |
| 48 | 3.6.2 | Procure Drain Volumes | $51,544.00 | 26 | 61 days | 16 days |
| 49 | 3.6.3 | Install Drain Volumes | $7,923.00 | 31 | 15 days | 5 days |
| 50 | **3.7** | **Support Equipment** | **$329,727.00** | **0** | **205 days** | **0 days** |
| 51 | 3.7.1 | Design Support Equipment | $9,480.00 | 25 | 7 days | 2 days |
| 52 | 3.7.2 | Procure Support Equipment | $276,507.00 | 14 | 122 days | 17 days |
| 53 | 3.7.3 | Install Support Equipment | $43,740.00 | 25 | 57 days | 14 days |
| 54 | **3.8** | **4He Refrigeration System** | **$1,239,982.00** | **0** | **524 days** | **0 days** |
| 55 | 3.8.1 | Design Refrigerator | $13,019.00 | 3 | 14 days | 1 day |
| 56 | 3.8.2 | Procure Refrigerator | $1,182,035.00 | 20 | 365 days | 73 days |
| 57 | 3.8.3 | Install Refrigerator | $44,928.00 | 20 | 70 days | 14 days |
| 58 | **3.9** | **Second Dilution Refrigerator** | **$802,755.00** | **0** | **820 days** | **0 days** |
| 59 | 3.9.1 | Design Second DR | $6,826.00 | 8 | 14 days | 1 day |
| 60 | 3.9.2 | Procure Second DR | $735,869.00 | 36 | 548 days | 197 days |
| 61 | 3.9.3 | Install Second DR | $60,060.00 | 10 | 60 days | 6 days |
| 62 | 3.10 | Gases and Cryogens (3He, LHe, LN2) | $10,113.00 | 11 | 14 days | 2 days |
| 63 | 3.11 | Cryogenics Components Complete | $0.00 | 0 | 0 days | 0 days |
| 64 | **4** | **3He Atomic Beam Source Interface** | **$139,218.00** | **0** | **414 days** | **0 days** |
| 65 | **4.1** | **Transport Tubes** | **$102,020.00** | **0** | **281 days** | **0 days** |
| 66 | 4.1.1 | Design Transport Tubes | $47,320.00 | 30 | 98 days | 29 days |
| 67 | 4.1.2 | Procure Transport Tubes | $31,853.00 | 58 | 75 days | 44 days |
| 68 | 4.1.3 | Install Transport Tubes | $22,847.00 | 58 | 35 days | 20 days |
| 69 | **4.2** | **Polarization Holding Coils** | **$33,178.00** | **0** | **379 days** | **0 days** |
| 70 | 4.2.1 | Design Holding Coils | $0.00 | 30 | 122 days | 37 days |
| 71 | 4.2.2 | Procure Holding Coils | $25,345.00 | 58 | 122 days | 37 days |
| 72 | 4.2.3 | Install Holding Coils | $7,833.00 | 58 | 61 days | 35 days |

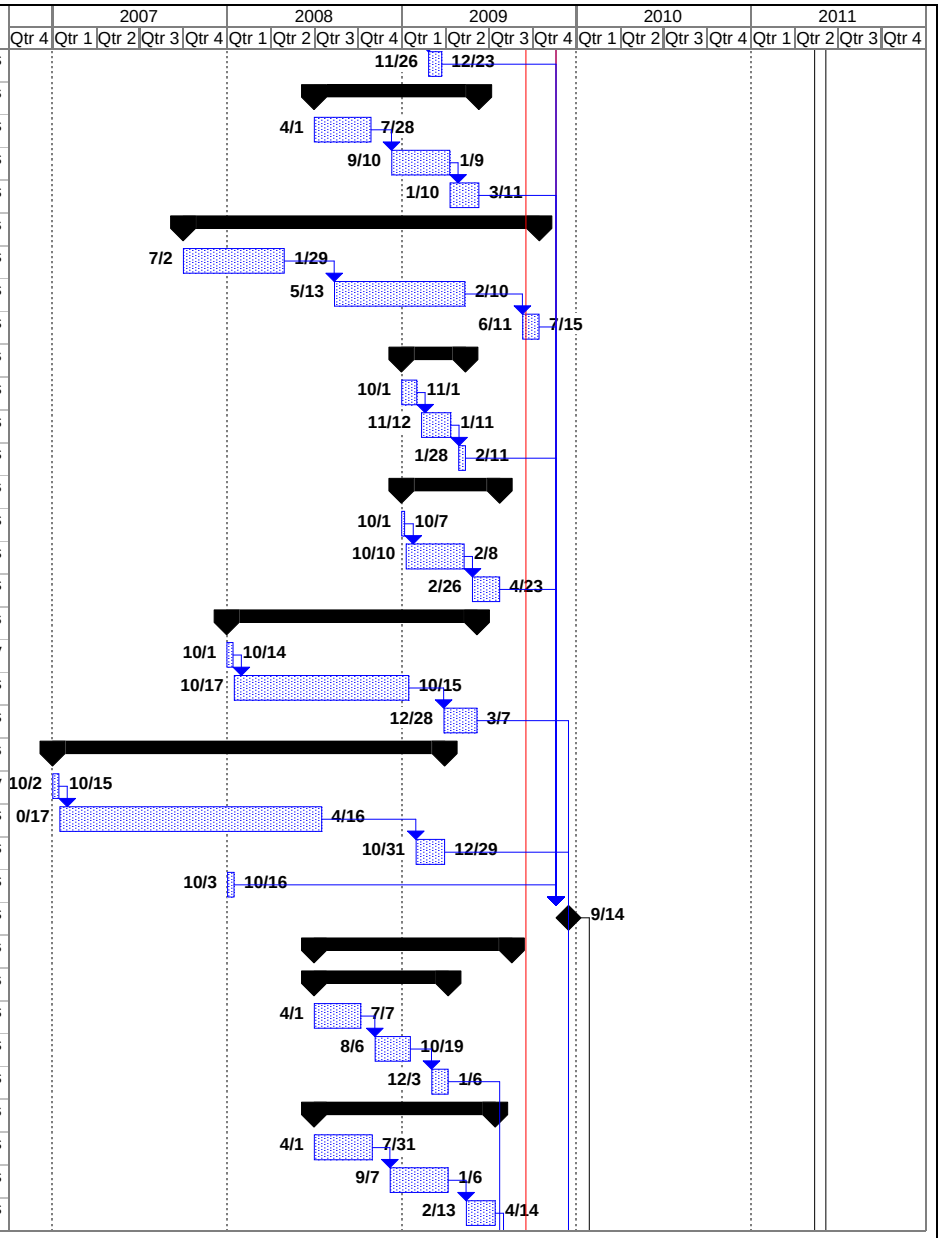


Project: EDM
Date: Thu 2/3/05

| | | | | | | | |
|---|---|---|---|---|---|---|---|
| Task | | Summary | | Rolled Up Progress | | Group By Summary | |
| Critical Task | | Rolled Up Task | | Split | | | |
| Progress | | Rolled Up Critical Task | | External Tasks | | | |
| Milestone | | Rolled Up Milestone | | Project Summary | | | |

| ID | WBS | Task Name | Total Cost | % Cont. | Duration | Float |
|---|---|---|---|---|---|---|
| 73 | 4.3 | Procure 3He | $4,020.00 | 34 | 30 days | 10 days |
| 74 | 4.4 | 3He Atomic Beam Source Ready | $0.00 | 0 | 0 days | 0 days |
| 75 | **5** | **Magnetic Shielding** | **$1,372,468.00** | **0** | **1074 days** | **0 days** |
| 76 | **5.1** | **5 Layer Conventional Shields** | **$1,001,097.00** | **0** | **502 days** | **0 days** |
| 77 | 5.1.1 | Design Conventional Shield | $0.00 | 25 | 61 days | 15 days |
| 78 | 5.1.2 | Procure Conventional Shield | $806,664.00 | 22 | 300 days | 65 days |
| 79 | 5.1.3 | Install Conventional Shield | $194,433.00 | 37 | 61 days | 19 days |
| 80 | **5.2** | **Superconducting Shields** | **$142,800.00** | **0** | **1016 days** | **0 days** |
| 81 | 5.2.1 | Design Superconducting Shield | $45,360.00 | 40 | 261 days | 104 days |
| 82 | 5.2.2 | Procure Superconducting Shield | $30,240.00 | 40 | 365 days | 146 days |
| 83 | 5.2.3 | Install Superconducting Shield | $67,200.00 | 40 | 140 days | 56 days |
| 84 | **5.3** | **Ferromagnetic Shields** | **$79,056.00** | **0** | **589 days** | **0 days** |
| 85 | 5.3.1 | Design Ferromagnetic Shields | $0.00 | 22 | 300 days | 65 days |
| 86 | 5.3.2 | Procure Ferromagnetic Shields | $79,056.00 | 22 | 183 days | 40 days |
| 87 | 5.3.3 | Install Ferromagnetic Shields | $0.00 | 22 | 1 day | 0 days |
| 88 | 5.4 | Other Magnetic Shielding | $100,440.00 | 24 | 589 days | 141 days |
| 89 | **5.5** | **Magnetic Penetrations** | **$49,075.00** | **0** | **884 days** | **0 days** |
| 90 | 5.5.1 | Design Penetrations | $18,403.00 | 42 | 257 days | 108 days |
| 91 | 5.5.2 | Procure Penetrations | $30,672.00 | 42 | 365 days | 153 days |
| 92 | 5.5.3 | Install Penetrations | $0.00 | 42 | 1 day | 0 days |
| 93 | 5.6 | Magnetic Shielding Complete | $0.00 | 0 | 0 days | 0 days |
| 94 | **6** | **Magnets** | **$809,701.00** | **0** | **1460 days** | **0 days** |
| 95 | **6.1** | **Constant Field Coil** | **$173,342.00** | **0** | **1022 days** | **0 days** |
| 96 | 6.1.1 | Design Constant Field Coil | $25,728.00 | 34 | 272 days | 93 days |
| 97 | 6.1.2 | Procure Constant Field Coil | $43,416.00 | 34 | 365 days | 124 days |
| 98 | 6.1.3 | Install Constant Field Coil | $104,198.00 | 34 | 168 days | 57 days |
| 99 | 6.2 | Constant Field Coil Power Supply | $58,320.00 | 20 | 365 days | 73 days |
| 100 | **6.3** | **pi/2 Coil** | **$29,587.00** | **0** | **868 days** | **0 days** |
| 101 | 6.3.1 | Design pi/2 Coil | $6,432.00 | 34 | 272 days | 93 days |
| 102 | 6.3.2 | Procure pi/2 Coil | $14,472.00 | 34 | 365 days | 124 days |
| 103 | 6.3.3 | Install pi/2 Coil | $8,683.00 | 34 | 14 days | 5 days |
| 104 | 6.4 | pi/2 Coil Power Supply | $12,960.00 | 20 | 365 days | 73 days |
| 105 | **6.5** | **Dressed Spin Coils** | **$202,286.00** | **0** | **1022 days** | **0 days** |
| 106 | 6.5.1 | Design Dressed Spin Coils | $25,728.00 | 34 | 272 days | 93 days |
| 107 | 6.5.2 | Procure Dressed Spin Coils | $72,360.00 | 34 | 365 days | 124 days |
| 108 | 6.5.3 | Install Dressed Spin Coils | $104,198.00 | 34 | 168 days | 57 days |

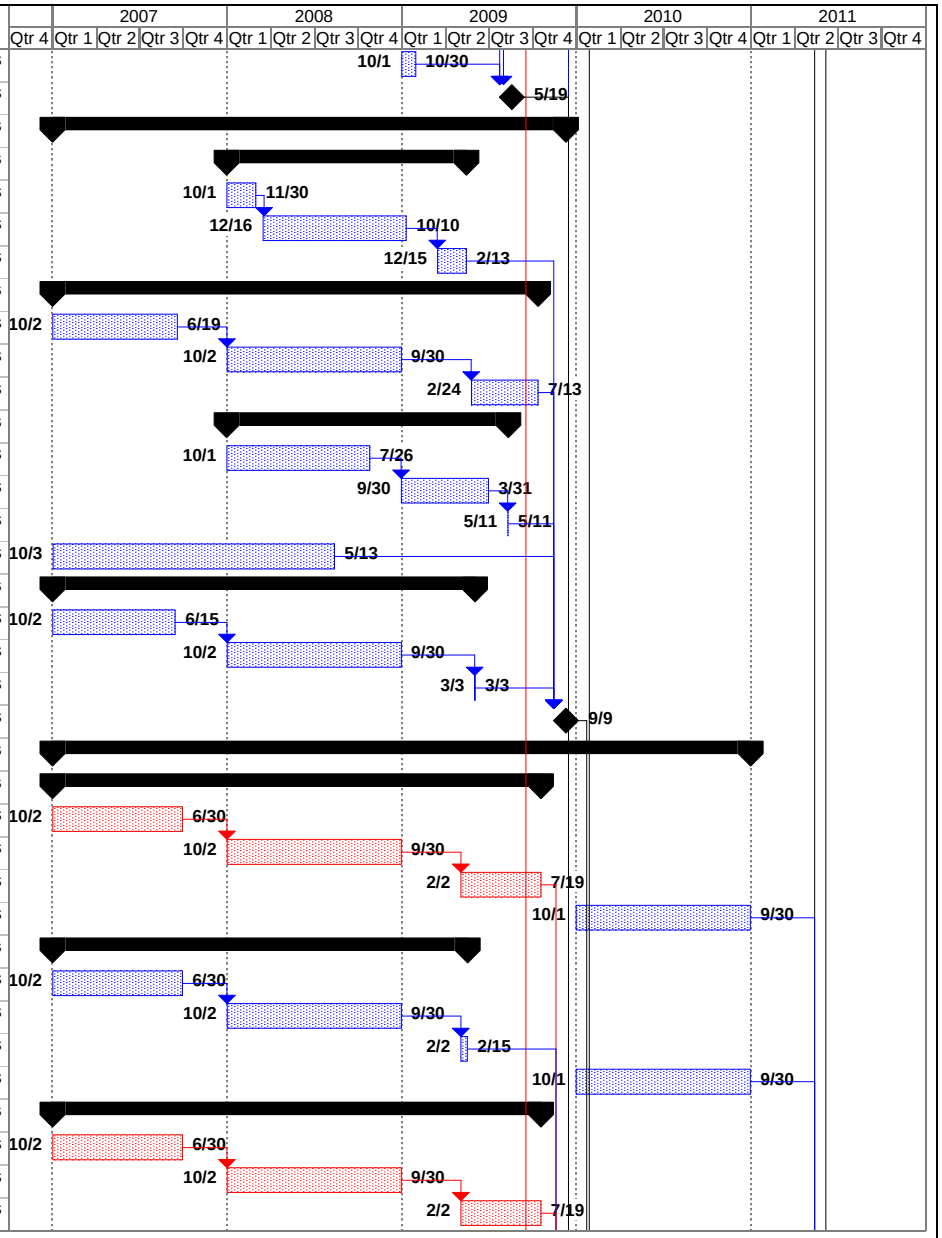


Project: EDM
Date: Thu 2/3/05

| | | | | | | | |
|---|---|---|---|---|---|---|---|
| Task | | Summary | | Rolled Up Progress | | Group By Summary | |
| Critical Task | | Rolled Up Task | | Split | | | |
| Progress | | Rolled Up Critical Task | | External Tasks | | | |
| Milestone | | Rolled Up Milestone | | Project Summary | | | |

| ID | WBS | Task Name | Total Cost | % Cont. | Duration | Float |
|---|---|---|---|---|---|---|
| 109 | 6.6 | Dressed Spin Coil Power Supplies | $25,920.00 | 20 | 365 days | 73 days |
| 110 | **6.7** | **3He Spin-Holding Coil** | **$173,342.00** | **0** | **1022 days** | **0 days** |
| 111 | 6.7.1 | Design 3He Spin-Holding Coil | $25,728.00 | 34 | 272 days | 93 days |
| 112 | 6.7.2 | Procure 3He Spin-Holding Coil | $43,416.00 | 34 | 365 days | 124 days |
| 113 | 6.7.3 | Install 3He Spin-Holding Coil | $104,198.00 | 34 | 168 days | 57 days |
| 114 | 6.8 | 3He Spin Holding Coil Power Supply | $12,960.00 | 20 | 365 days | 73 days |
| 115 | **6.9** | **Field Monitors** | **$120,984.00** | **0** | **913 days** | **0 days** |
| 116 | 6.9.1 | Design Field Monitors | $13,632.00 | 42 | 257 days | 108 days |
| 117 | 6.9.2 | Procure Field Monitors | $107,352.00 | 42 | 365 days | 153 days |
| 118 | 6.9.3 | Install Field Monitors | $0.00 | 42 | 30 days | 13 days |
| 119 | 6.10 | Magnets Complete | $0.00 | 0 | 0 days | 0 days |
| 120 | **7** | **High Voltage** | **$237,989.00** | **0** | **577 days** | **0 days** |
| 121 | **7.1** | **Gain Capacitor** | **$73,027.00** | **0** | **462 days** | **0 days** |
| 122 | 7.1.1 | Design Capacitor | $5,783.00 | 22 | 75 days | 17 days |
| 123 | 7.1.2 | Procure Capacitor | $49,654.00 | 22 | 183 days | 40 days |
| 124 | 7.1.3 | Install Capacitor | $17,590.00 | 22 | 31 days | 7 days |
| 125 | **7.2** | **Electrodes and Corona Domes** | **$40,737.00** | **0** | **402 days** | **0 days** |
| 126 | 7.2.1 | Design Electrodes | $12,514.00 | 32 | 75 days | 24 days |
| 127 | 7.2.2 | Procure Electrodes | $9,768.00 | 32 | 183 days | 59 days |
| 128 | 7.2.3 | Install Electrodes | $18,455.00 | 28 | 61 days | 17 days |
| 129 | **7.3** | **Connecting HV Line** | **$19,858.00** | **0** | **280 days** | **0 days** |
| 130 | 7.3.1 | Design Connecting Line | $1,251.00 | 32 | 75 days | 24 days |
| 131 | 7.3.2 | Procure Connecting Line | $2,640.00 | 32 | 91 days | 29 days |
| 132 | 7.3.3 | Install Connecting Line | $15,967.00 | 28 | 61 days | 17 days |
| 133 | **7.4** | **Penetrations** | **$60,412.00** | **0** | **406 days** | **0 days** |
| 134 | 7.4.1 | Design Penetrations | $2,891.00 | 22 | 75 days | 17 days |
| 135 | 7.4.2 | Procure Penetrations | $36,966.00 | 22 | 183 days | 40 days |
| 136 | 7.4.3 | Install Penetrations | $20,555.00 | 22 | 91 days | 20 days |
| 137 | 7.5 | Cables | $555.00 | 6 | 61 days | 4 days |
| 138 | **7.6** | **Kerr Rotation HV Monitor** | **$43,400.00** | **0** | **225 days** | **0 days** |
| 139 | 7.6.1 | Design HV Monitor | $0.00 | 32 | 30 days | 10 days |
| 140 | 7.6.2 | Procure HV Monitor | $43,400.00 | 40 | 122 days | 39 days |
| 141 | 7.6.3 | Install HV Monitor | $0.00 | 35 | 14 days | 5 days |
| 142 | 7.7 | High Voltage Complete | $0.00 | 0 | 0 days | 0 days |
| 143 | **8** | **Measuring Cells** | **$1,017,248.00** | **0** | **935 days** | **0 days** |
| 144 | **8.1** | **Cells** | **$152,979.00** | **0** | **184 days** | **0 days** |

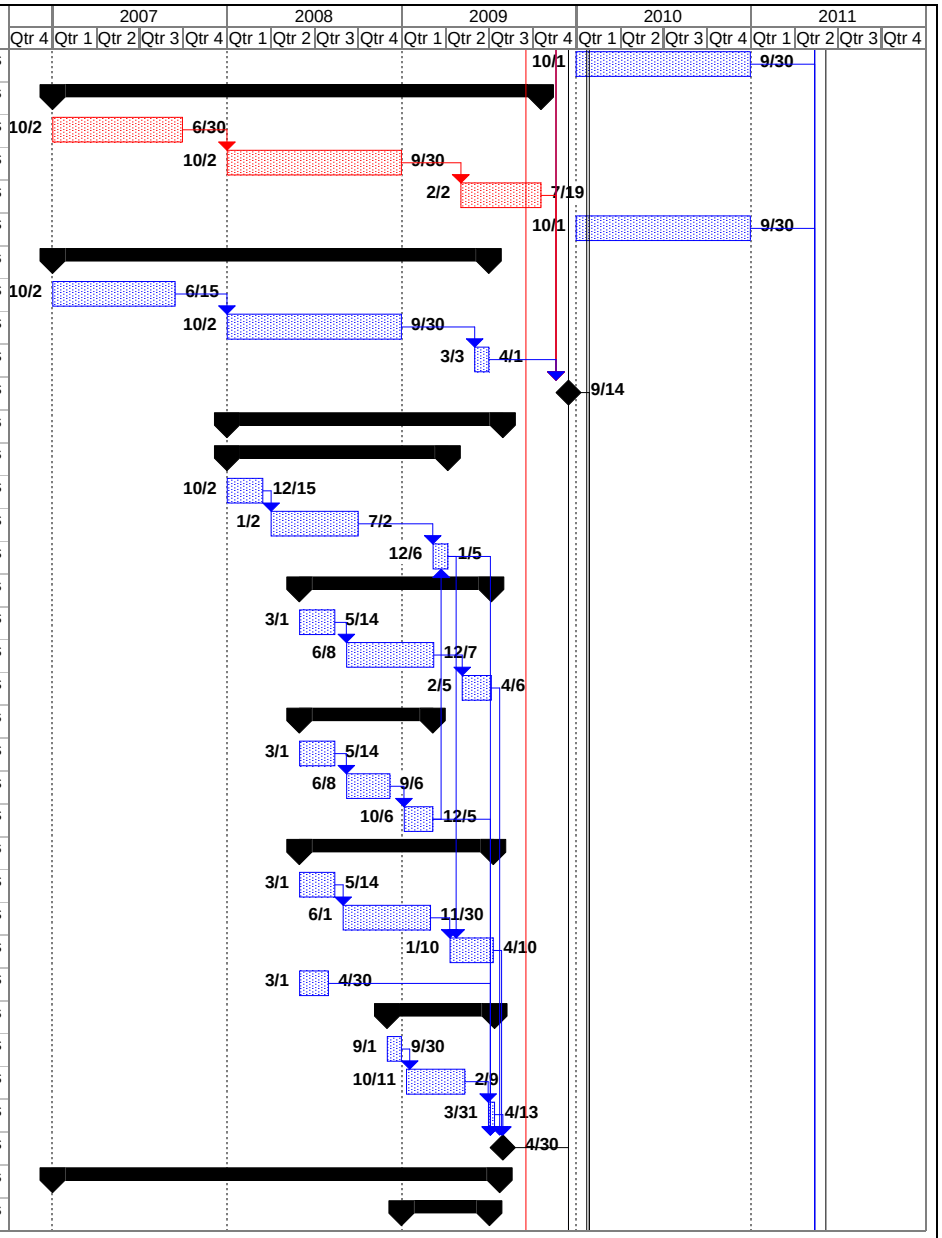


Project: EDM
Date: Thu 2/3/05

| | | | | | | | |
|---|---|---|---|---|---|---|---|
| Task | | Summary | | Rolled Up Progress | | Group By Summary | |
| Critical Task | | Rolled Up Task | | Split | | | |
| Progress | | Rolled Up Critical Task | | External Tasks | | | |
| Milestone | | Rolled Up Milestone | | Project Summary | | | |

| ID | WBS | Task Name | Total Cost | % Cont. | Duration | Float |
|---|---|---|---|---|---|---|
| 145 | 8.1.1 | Design Cells | $10,238.00 | 35 | 8 days | 3 days |
| 146 | 8.1.2 | Procure Cells | $84,421.00 | 24 | 91 days | 22 days |
| 147 | 8.1.3 | Install Cells | $58,320.00 | 35 | 60 days | 21 days |
| 148 | **8.2** | **Valves** | **$812,026.00** | **0** | **768 days** | **0 days** |
| 149 | 8.2.1 | Design Valves | $122,388.00 | 41 | 210 days | 86 days |
| 150 | 8.2.2 | Procure Valves | $595,502.00 | 58 | 183 days | 106 days |
| 151 | 8.2.3 | Install Valves | $94,136.00 | 58 | 183 days | 106 days |
| 152 | 8.3 | Coatings | $52,243.00 | 18 | 6 days | 1 day |
| 153 | 8.4 | Measuring Cells Complete | $0.00 | 0 | 0 days | 0 days |
| 154 | **9** | **SQUIDs** | **$77,003.00** | **0** | **913 days** | **0 days** |
| 155 | **9.1** | **SQUIDs** | **$35,247.00** | **0** | **375 days** | **0 days** |
| 156 | 9.1.1 | Design SQUIDs | $0.00 | 43 | 1 day | 1 day |
| 157 | 9.1.2 | Procure SQUIDs | $34,320.00 | 43 | 183 days | 79 days |
| 158 | 9.1.3 | Install SQUIDs | $927.00 | 43 | 8 days | 3 days |
| 159 | 9.2 | Pick-up Loops | $1,430.00 | 43 | 2 days | 1 day |
| 160 | 9.3 | Enclosures | $1,430.00 | 43 | 30 days | 13 days |
| 161 | 9.4 | Feed Throughs | $4,576.00 | 43 | 30 days | 13 days |
| 162 | 9.5 | SQUID Electronics | $34,320.00 | 43 | 183 days | 79 days |
| 163 | 9.6 | SQUIDs Complete | $0.00 | 0 | 0 days | 0 days |
| 164 | **10** | **Light System** | **$149,966.00** | **0** | **445 days** | **0 days** |
| 165 | **10.1** | **Light Guides** | **$88,354.00** | **0** | **248 days** | **0 days** |
| 166 | 10.1.1 | Design Optics | $10,788.00 | 24 | 89 days | 21 days |
| 167 | 10.1.2 | Procure Optics | $68,692.00 | 38 | 95 days | 36 days |
| 168 | 10.1.3 | Install Optics | $8,874.00 | 18 | 7 days | 1 day |
| 169 | **10.2** | **Cryogenic Feedthroughs** | **$39,312.00** | **0** | **259 days** | **0 days** |
| 170 | 10.2.1 | Design Feedthroughs | $9,639.00 | 26 | 22 days | 6 days |
| 171 | 10.2.2 | Procure Feedthroughs | $20,799.00 | 30 | 18 days | 5 days |
| 172 | 10.2.3 | Install Feedthroughs | $8,874.00 | 18 | 16 days | 3 days |
| 173 | 10.3 | Photomultiplier Tubes | $22,300.00 | 16 | 60 days | 10 days |
| 174 | 10.4 | Light System Complete | $0.00 | 0 | 0 days | 0 days |
| 175 | **11** | **Electronics / Computers** | **$377,524.00** | **0** | **224 days** | **0 days** |
| 176 | 11.1 | Electronics | $275,835.00 | 35 | 126 days | 44 days |
| 177 | 11.2 | Cables | $15,158.00 | 20 | 91 days | 18 days |
| 178 | 11.3 | Computers | $86,531.00 | 23 | 224 days | 52 days |
| 179 | **12** | **Conventional Construction** | **$1,275,989.00** | **0** | **1060 days** | **0 days** |
| 180 | **12.1** | **Platforms** | **$159,877.00** | **0** | **1060 days** | **0 days** |

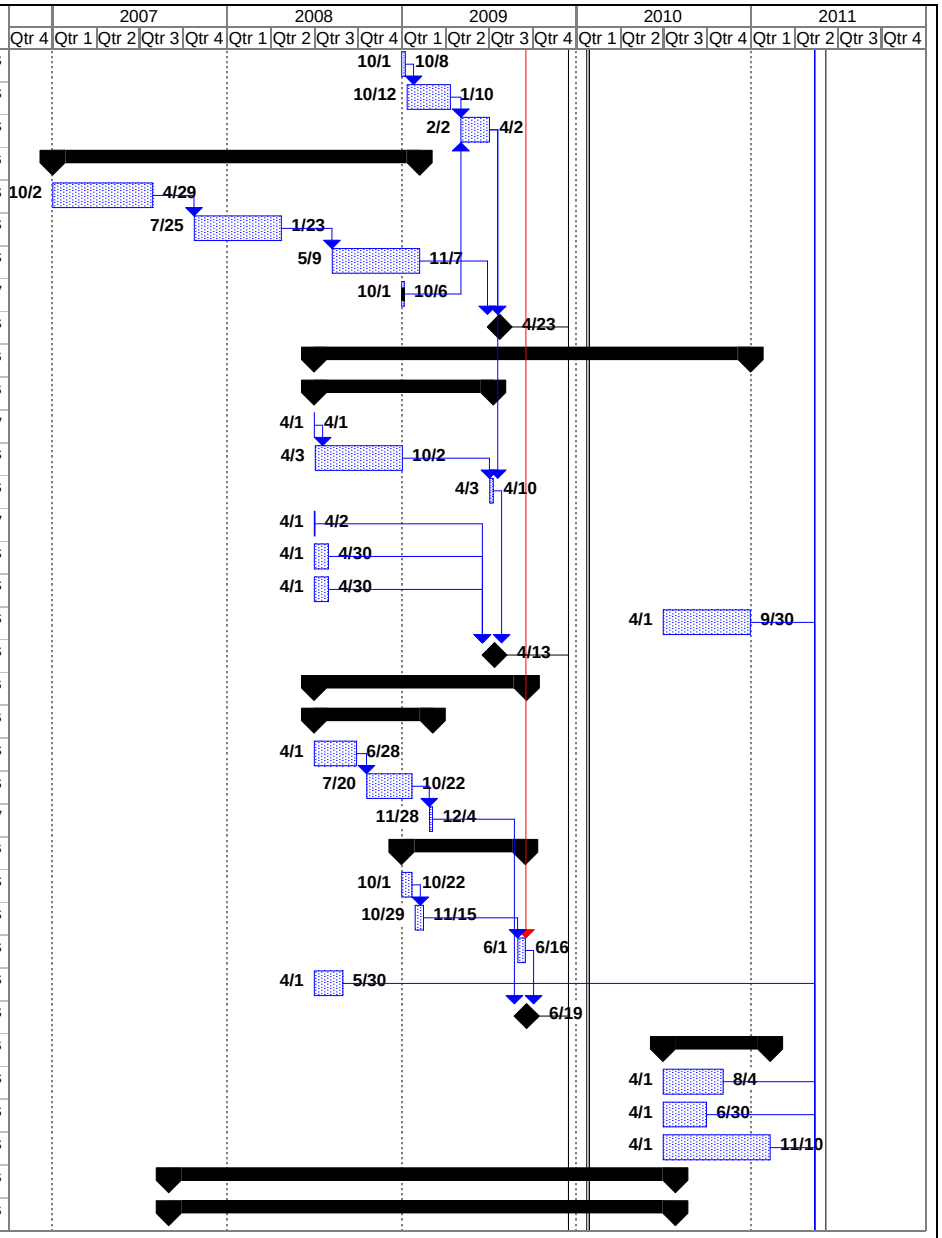


Project: EDM
Date: Thu 2/3/05

| | | | | | | | |
|---|---|---|---|---|---|---|---|
| Task | | Summary | | Rolled Up Progress | | Group By Summary | |
| Critical Task | | Rolled Up Task | | Split | | | |
| Progress | | Rolled Up Critical Task | | External Tasks | | | |
| Milestone | | Rolled Up Milestone | | Project Summary | | | |

| ID | WBS | Task Name | Total Cost | % Cont. | Duration | Float |
|---|---|---|---|---|---|---|
| 181 | 12.1.1 | Design Platforms | $24,299.00 | 43 | 21 days | 9 days |
| 182 | 12.1.2 | Procure Platforms | $114,071.00 | 43 | 91 days | 39 days |
| 183 | 12.1.3 | Install Platforms | $21,507.00 | 43 | 14 days | 6 days |
| 184 | **12.2** | **Electrical Plant** | **$298,970.00** | **0** | **305 days** | **0 days** |
| 185 | 12.2.1 | Design Electrical Plant | $54,683.00 | 43 | 49 days | 21 days |
| 186 | 12.2.2 | Procure Electrical Plant | $121,193.00 | 43 | 91 days | 39 days |
| 187 | 12.2.3 | Install Electrical Plant | $123,094.00 | 43 | 105 days | 45 days |
| 188 | **12.3** | **Plumbing** | **$340,340.00** | **0** | **397 days** | **0 days** |
| 189 | 12.3.1 | Design Plumbing | $94,151.00 | 43 | 84 days | 36 days |
| 190 | 12.3.2 | Procure Plumbing | $129,272.00 | 43 | 91 days | 39 days |
| 191 | 12.3.3 | Install Plumbing | $116,917.00 | 43 | 147 days | 63 days |
| 192 | **12.4** | **Mechanical Supports** | **$456,914.00** | **0** | **583 days** | **0 days** |
| 193 | 12.4.1 | Design Mechanical Supports | $184,985.00 | 43 | 161 days | 69 days |
| 194 | 12.4.2 | Procure Mechanical Supports | $193,908.00 | 43 | 183 days | 79 days |
| 195 | 12.4.3 | Install Mechanical Supports | $78,021.00 | 43 | 91 days | 39 days |
| 196 | 12.5 | Counting House | $19,888.00 | 10 | 42 days | 4 days |
| 197 | 12.6 | Conventional Construction Complete | $0.00 | 0 | 0 days | 0 days |
| 198 | **13** | **Management** | **$1,005,652.00** | **0** | **1711 days** | **0 days** |
| 199 | 13.1 | Project Manager - 2 days/wk | $282,639.00 | 23 | 1461 days | 336 days |
| 200 | 13.2 | Project Engineer - 2.5 days/wk | $723,013.00 | 10 | 1711 days | 188 days |
| 201 | **14** | **Integration and Commissioning** | **$616,205.00** | **0** | **633 days** | **0 days** |
| 202 | **14.1** | **Integration** | **$531,120.00** | **0** | **462 days** | **0 days** |
| 203 | 14.1.1 | Mechanical Assembly of Parts | $338,400.00 | 50 | 210 days | 105 days |
| 204 | 14.1.2 | Vacuum Checking | $23,520.00 | 50 | 28 days | 14 days |
| 205 | 14.1.3 | Trial Cool Downs and Operation | $169,200.00 | 50 | 105 days | 53 days |
| 206 | 14.2 | Commissioning | $85,085.00 | 30 | 91 days | 27 days |
| 207 | 14.3 | First Data | $0.00 | 0 | 0 days | 0 days |
| 208 | **15** | **Escalation - 2.5%/yr** | **$1,258,000.00** | **0** | **1711 days** | **0 days** |
| 209 | 15.1 | Escalation '07 | $110,000.00 | 0 | 364 days | 0 days |
| 210 | 15.2 | Escalation '08 | $442,000.00 | 0 | 366 days | 0 days |
| 211 | 15.3 | Escalation '09 | $431,000.00 | 0 | 365 days | 0 days |
| 212 | 15.4 | Escalation '10 | $202,000.00 | 0 | 365 days | 0 days |
| 213 | 15.5 | Escalation '11 | $73,000.00 | 0 | 251 days | 0 days |

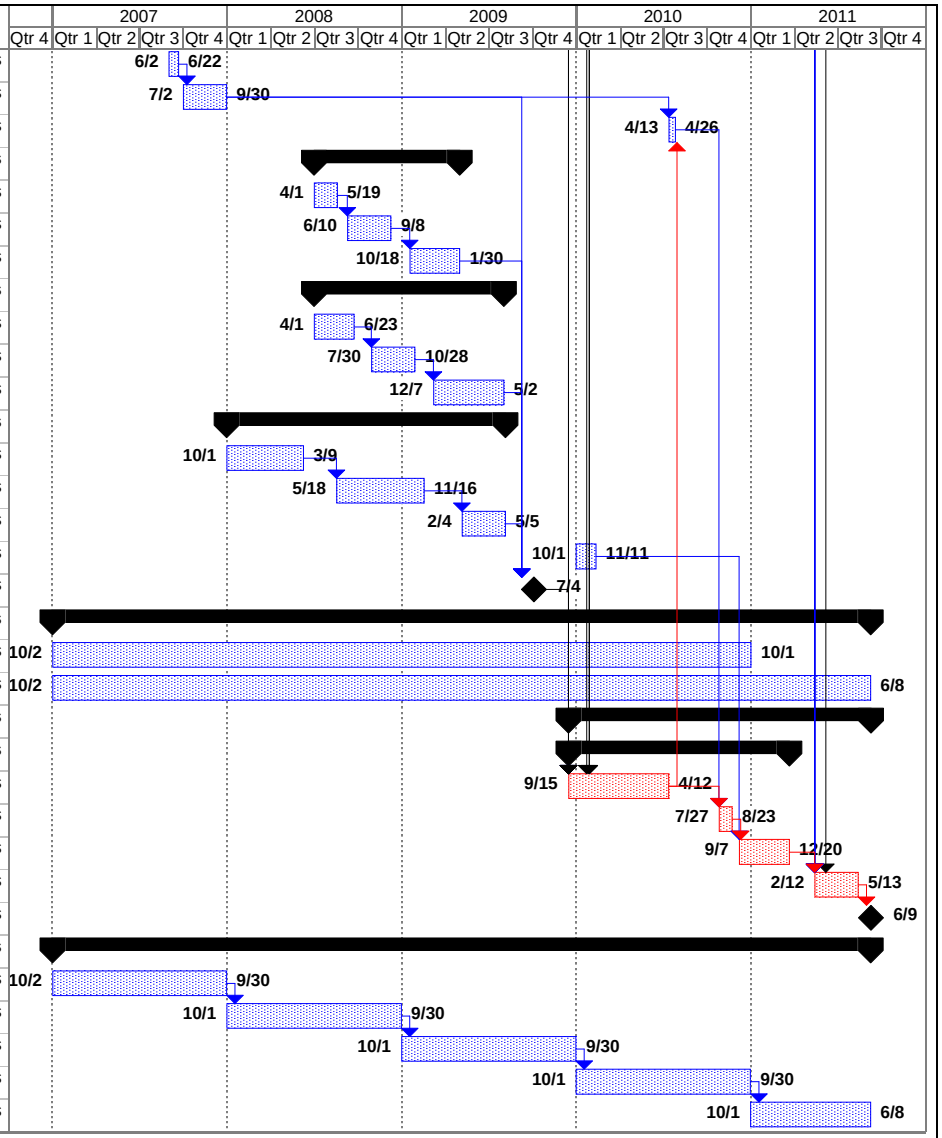


Project: EDM
Date: Thu 2/3/05

| | | | | | | | |
|---|---|---|---|---|---|---|---|
| Task | | Summary | | Rolled Up Progress | | Group By Summary | |
| Critical Task | | Rolled Up Task | | Split | | | |
| Progress | | Rolled Up Critical Task | | External Tasks | | | |
| Milestone | | Rolled Up Milestone | | Project Summary | | | |