# Linear electric field frequency shift (important for next generation electric dipole moment searches ) induced in confined gases by a magnetic field gradient.

A.L. Barabanov[#], R. Golub[+] and S.K. Lamoreaux[*]
[#]Kurchatov Institute
123182 Moscow, Russia
[+]Physics Department
North Carolina State University
Raleigh, NC 27606
[*]University of California,
Los Alamos National Laboratory
Physics Division
Los Alamos NM 87545
Yale University, Dept of Physics
PO Box 208120,
New Haven, CT 06520

July 14, 2006

**Abstract**

The search for particle electric dipole moments (edm) represents a most promising way to search for physics beyond the standard model. A number of groups are planning a new generation of experiments using stored gases of various kinds. In order to achieve the target sensitivities it will be necessary to deal with the systematic error resulting from the interaction of the well-known $\overrightarrow{v} \times \overrightarrow{E}$ field with magnetic field gradients (often referred to as the geometric phase effect (Commins, ED; Am. J. Phys. **59**, 1077 (1991), Pendlebury, JM *et al;* Phys. Rev. **A70**, 032102 (2004)). This interaction produces a frequency shift linear in the electric field, mimicking an edm. In this work we introduce an analytic form for the velocity auto-correlation function which determines the velocity-position correlation function which in turn determines the behavior of the frequency shift (Lamoreaux, SK and Golub, R; Phys. Rev **A71**, 032104 (2005)) and show how it depends on the operating conditions of the experiment. We also discuss some additional issues.

# Contents


**1 Introduction** **2**

**2 Analytical form for the correlation function $R(\tau)$** **5**
- 2.1 Specular wall collisions, no gas collisions . . . . . 5
  - 2.1.1 Specification of trajectories . . . . . 5
  - 2.1.2 The velocity autocorrelation function . . . . . 6
  - 2.1.3 Spectrum of the velocity correlation function . . . . . 7
  - 2.1.4 Solution for the frequency shift in the absence of gas collisions . . . . . 8
- 2.2 Influence of Gas collisions . . . . . 9
  - 2.2.1 The collision-free velocity correlation function as a sum of harmonic oscillators . . . . . 9
  - 2.2.2 Velocity correlation function in the limit of short gas-collision times . . . . . 9
  - 2.2.3 Combined influence of gas and specular wall collisions . . 10

**3 Frequency shift averaged over velocity distribution, temperature dependence** **13**

**4 Non-specular wall collisions** **16**

**5 Arbitrary Magnetic field geometry** **17**
- 5.1 Short time (high frequency, adiabatic) limit of the correlation function . . . . . 17
- 5.2 Longer time behavior of the correlation function . . . . . 19

**6 Discussion** **20**

**7 Appendix A** **20**

**8 Appendix B** **23**


# 1 Introduction

The proposition that the search for particle electric dipole moments (edm) represents a reasonable method to look for physics beyond the standard model [1] is inspiring many groups to search for edm's in a variety of systems. (See [2] for a recent review). Experiments on several systems including the neutron [3], and several species of confined gases [4] including Radium [5], Radon [6] and Xenon [7] are in various stages of preparation. These experiments are all hoping to reach sensitivities in the range of $10^{-27} - 10^{-28} e - cm$. Sensitivity in this range has already been achieved in the case of $Hg$ [8]. The experiments proposed represent a broad range of operating conditions, from room temperature gases with buffer gas to laser cooled atoms in a MOT.

In order to achieve the target sensitivities it will be necessary to deal with the systematic error resulting from the interaction of the well-known $\overrightarrow{v} \times \overrightarrow{E}$ field with magnetic field gradients. Often referred to as the geometric phase effect [9], [10] this interaction produces a frequency shift linear in the electric field, mimicking an edm. This systematic effect is highly dependent on the operating conditions of the experiment. While experiments in small vessels and with high pressure buffer gas are expected to be relatively insensitive to the systematic effect, each of the proposed experiments will have to be analyzed in detail to judge its sensitivity to the effect and to find methods of dealing with it.

In this work we introduce an analytic form of the correlation function which determines the behavior of the frequency shift [11] and show in detail how it depends on the operating conditions of the experiment. For clarity we specialize the discussion to the Los Alamos proposal for a neutron edm search using Ultra-cold neutrons (UCN) and $He^3$ atoms diffusing in superfluid $He^4$ as a co-magnetometer, [12] but the generalization to other cases is straightforward.

First analyzed by Commins [9] in the context of a beam experiment, the frequency shift has been discussed in some detail by Pendlebury et al [10] in connection with experiments involving stored particle gases. Additional discussion and calculations have been given by [11].

Our present understanding of the effect can best be summarized by figure 1, which appeared as figure 3 in [11]. This is a plot of the normalized (linear in $E$) frequency shift, $\delta\omega$, vs. normalized Larmor frequency, $\omega_0$, for various values of collision mean free path, $\lambda$, and wall specularity, calculated for particles moving with fixed velocity, $v$, in a cylindrical measurement cell of radius $R$. The horizontal scale is fixed by the frequency of motion around the cell ($v/R$). In general the shift for UCN will be given by a value of $\omega_o > 4$ while co-magnetometer atoms are characterized by $\omega_o \ll 1$.

These results have been obtained by numerical simulation of the position-velocity correlation function and taking the Fourier transform. According to [[11], Eq. 26] the frequency shift is given by

$$\delta\omega = \frac{ab}{2} \lim_{\tau\to\infty} \int_0^\tau R\left(t\right) \cos(\omega_0 t) dt, \tag{1}$$

where $a = \frac{\gamma}{2}\partial B_z/\partial z$, $b = \gamma E/c$, $\gamma$ is the gyromagnetic ratio, and $R\left(\tau\right)$ is the position-velocity correlation function for motion in the plane perpendicular to the $z$ axis, defined in [[11], Eq.. 27]:

$$R\left(\tau\right) = \langle \overrightarrow{r_\perp}(t) \cdot \overrightarrow{v_\perp}(t-\tau) - \overrightarrow{r_\perp}(t-\tau) \cdot \overrightarrow{v_\perp}(t) \rangle \,. \tag{2}$$

From the experimental point of view it is very appealing to try to make use of the zero crossing, apparent in figure 1, to reduce the effect.

In this note we present an analytic form for the velocity correlation function from which $R\left(\tau\right)$ can be determined and compare it to the results obtained previously by numerical simulations. In the collision-free case we obtain the result obtained in ([10], Eq.. 78) for a single trajectory. Using the analytic

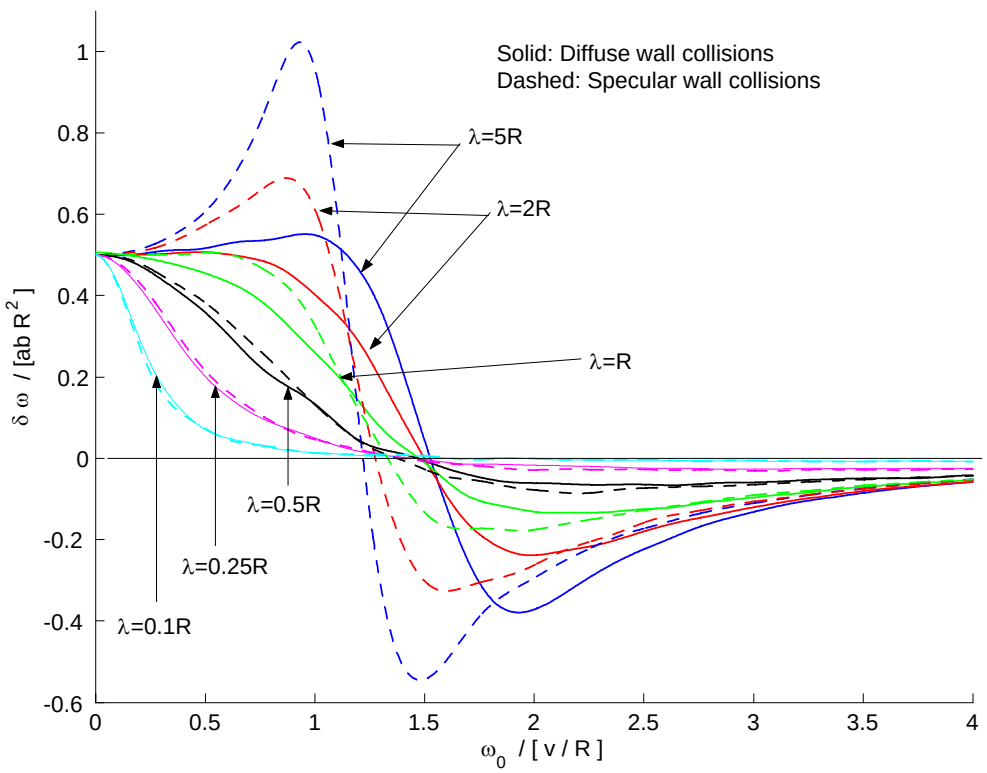


Figure 1: Note the curves are for a single fixed velocity. The velocity dependence is contained in the normalization of the frequency scale, $\omega_r = v/R$.

function for the case with gas collisions, we average over a Maxwell velocity distribution and calculate the temperature dependence of the frequency shift for $^3He$ diffusing in superfluid $^4He$. We also propose a method for measuring the spectrum of the correlation function, *i.e.* the frequency dependence of the shift, directly.

# 2 Analytical form for the correlation function $R(\tau)$

According to [11] the correlation function $R(\tau)$ is determined by the velocity autocorrelation function,

$$\psi(t) \equiv \langle \vec{v}_\perp(t) \cdot \vec{v}_\perp(0) \rangle, \tag{3}$$

namely,

$$R(\tau) = 2 \int_0^\tau \psi(t) dt. \tag{4}$$

Notice, that

$$R(\tau) \to 0, \qquad \text{when} \qquad \tau \to \infty. \tag{5}$$

Thus we start by considering $\psi(t)$.

## 2.1 Specular wall collisions, no gas collisions

### 2.1.1 Specification of trajectories

We consider particles moving ballistically in a cylindrical storage cell with a fixed velocity $v$. As shown in [10],[11] the frequency shift depends only on the motion in the $x, y$ plane. Referring to figure 2, the trajectory sweeps out an angle

$$\alpha = \arccos\left(\frac{r}{R}\right) \tag{6}$$

with respect to the center in a time

$$\tau_w = \frac{2R \sin\alpha}{v} \tag{7}$$

where $\tau_w$ is the time between wall collisions. For specular reflections the angle $\alpha$, characterizing the trajectory and the velocity are unchanged by reflection.

The average angular velocity for a single trajectory is then

$$\omega(\alpha) = \frac{2\alpha}{\tau_w}. \tag{8}$$

Let $F(r)\,dr$ be the probability that the trajectory of a particle has a distance of closest approach to the center in the interval $(r, r + dr)$. According figure 2,

$$F(r)\,dr = \frac{2\sqrt{R^2 - r^2}\,dr}{\pi R^2/2} \qquad \Rightarrow \qquad F(r) = \frac{4\sqrt{R^2 - r^2}}{\pi R^2}. \tag{9}$$

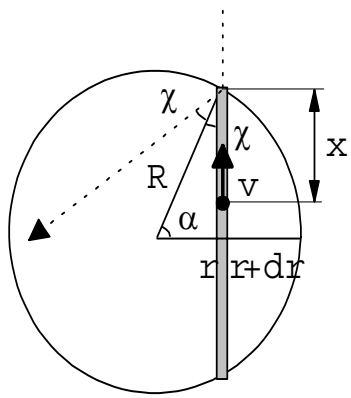


Figure 2: Trajectory of a particle in a cylindrical cell.

We will use the distribution $P(\alpha)d\alpha$ of the trajectories over the angle $\alpha$, where

$$P(\alpha)|d\alpha| = F(r)|dr| \quad \Rightarrow \quad P(\alpha) = F(r)\left|\frac{dr}{d\alpha}\right| = \frac{4\sin^2\alpha}{\pi}, \quad \int\limits_0^{\pi/2} P(\alpha)d\alpha = 1, \tag{10}$$

a result obtained in [10].

### 2.1.2 The velocity autocorrelation function

We now calculate the velocity autocorrelation function for the particles moving along the trajectories with given $\alpha$ (or the pericenter $r = R\cos\alpha$),

$$\psi(\alpha, t) = \langle \vec{v}_\perp(t) \cdot \vec{v}_\perp(0) \rangle, \qquad \psi(\alpha, 0) = v_\perp^2. \tag{11}$$

Here the averaging goes only over the initial position of the particles. Let the velocity autocorrelation function be denoted by

$$f(x, \alpha, t) \equiv \frac{\vec{v}_\perp(t) \cdot \vec{v}_\perp(0)}{v^2}. \tag{12}$$

for a particle on a trajectory characterized by $\alpha$, starting at the position $x$, measured from the end of a chord, at $t = 0$. Thus,

$$\psi(\alpha, t) = \frac{v^2}{2R\sin\alpha} \int\limits_0^{2R\sin\alpha} f(x, \alpha, t)dx. \tag{13}$$

As the speed $|\overrightarrow{v}| = v$ is not changed by the collisions the velocity correlation function is proportional to $\cos\theta(t)$ where $\theta(t)$ is the angle between $\vec{v}_\perp(t)$ and $\vec{v}_\perp(0)$. The starting position $x$ determines the exact times at which the collisions occur, the time between collisions being given by (7) in all cases.

As a result, for the time $l \cdot \tau_w < t < (l+1) \cdot \tau_w$ $(l = 0, 1, 2 \ldots)$ the function $f$ is given by

$$f(x, \alpha, t) = \begin{cases} \cos(2(l+1)\alpha), & 0 < x < v(t - l \cdot \tau_w), \\ \cos(2l\alpha), & v(t - l \cdot \tau_w) < x < 2R \sin\alpha, \end{cases} \tag{14}$$

Then performing the averaging (13) the autocorrelation function takes the form:

$$\psi(\alpha, t) = v^2 (A_l + B_l \frac{t}{\tau_w}), \tag{15}$$

where

$$A_l = (l+1)\cos(2l\alpha) - l\cos(2(l+1)\alpha), \tag{16}$$

$$B_l = \cos(2(l+1)\alpha) - \cos(2l\alpha). \tag{17}$$

### 2.1.3 Spectrum of the velocity correlation function

The autocorrelation function can be written as a Fourier integral, valid for both closed, periodic orbits and general open ones:

$$\psi(\alpha, t) = \int_{-\infty}^{+\infty} \Psi(\alpha, \omega) \cos(\omega t) d\omega, \tag{18}$$

where $\Psi(\alpha, \omega) = \Psi^*(\alpha, \omega)$ and $\Psi(\alpha, \omega) = \Psi(\alpha, -\omega)$, so that

$$\Psi(\alpha, \omega) = \frac{1}{\pi} \int_0^{\infty} \psi(\alpha, t) \cos(\omega t) dt. \tag{19}$$

Straightforward calculation (see Appendix A) gives:

$$\begin{aligned} \Psi(\alpha, \omega) &= \frac{2v^2 \sin^2\alpha}{\omega^2 \tau_w^2} \sum_{m=-\infty}^{\infty} \left[ \delta\left(\omega + \frac{2\alpha - 2\pi m}{\tau_w}\right) + \delta\left(\omega - \frac{2\alpha + 2\pi m}{\tau_w}\right) \right] \\ &= \frac{2v^2 \sin^2\alpha}{\omega^2 \tau_w^2} \sum_{m=-\infty}^{\infty} \left[ \delta\left(\omega - \omega_m^+(\alpha)\right) + \delta\left(\omega - \omega_m^-(\alpha)\right) \right] \end{aligned} \tag{20}$$

where

$$\omega_m^{\pm}(\alpha) = \frac{2(\pi m \pm \alpha)}{\tau_w}. \tag{21}$$

Notice that these frequencies are the resonant frequencies found previously in the behavior of the the frequency shift as function of the angle $\alpha$ for particles moving inside a cylindrical cell without any damping – see figure 7 and equation (78) in [10]. (Below we rederive this equation in the frame of our approach and show how it can be generalized to account for damping).

#### 2.1.4 Solution for the frequency shift in the absence of gas collisions

Now the frequency shift $\Delta\omega(\alpha)$ see equation (40) ref. [11]

$$\begin{aligned}
-\Delta\omega(\alpha) &= ab\int_{-\infty}^{\infty}\frac{\Psi(\alpha,\omega)}{(\omega_o^2-\omega^2)}d\omega \\
&= 2abv^2\sin^2\alpha\sum_{m=-\infty}^{\infty}\int_{-\infty}^{\infty}\frac{\left[\delta\left(\omega+\frac{2\alpha-2\pi m}{\tau_w}\right)+\delta\left(\omega-\frac{2\alpha+2\pi m}{\tau_w}\right)\right]}{(\tau_w\omega)^2(\omega_o^2-\omega^2)}d\omega \\
&= 2abv^2\sin^2\alpha\sum_{m=-\infty}^{\infty}\tau_w^2\times ... \\
&... \times\left[\frac{1}{(2\alpha-2\pi m)^2}\frac{1}{\left(\tau_w^2\omega_o^2-(2\alpha-2\pi m)^2\right)}+\frac{1}{(2\alpha+2\pi m)^2\left(\tau_w^2\omega_o^2-(2\alpha+2\pi m)^2\right)}\right]
\end{aligned} \tag{22}$$

The sum is over all $m$, so terms with $\pm m$ are included twice. Using $\tau_w = 2R\sin\alpha/v$ and writing $\omega_o\tau_w = 2\omega_o R\sin\alpha/v = 2\omega_o'\sin\alpha \equiv 2\delta_o$ with $\omega_o' = \omega_o R/v$ being the dimensionless frequency we then find:

$$-\Delta\omega(\alpha) = R^2ab\sin^4\alpha\sum_{m=-\infty}^{\infty}\frac{1}{(\alpha+\pi m)^2}\frac{1}{\left(\delta_o^2-(\alpha+\pi m)^2\right)} \tag{23}$$

$$\begin{aligned}
&= \frac{1}{2\delta_o}R^2ab\sin^4\alpha\sum_{m=-\infty}^{\infty}\times ... \\
&\left(\frac{1}{((\delta_o-\alpha)-\pi m)}+\frac{1}{((\delta_o+\alpha)+\pi m)}\right)\frac{1}{(\alpha+\pi m)^2},
\end{aligned} \tag{24}$$

$$-\Delta\omega(\alpha) = R^2ab\sin^2\alpha\sum_{m=-\infty}^{\infty}\frac{1}{(\alpha+\pi m)^2}\frac{1}{\left(\omega_o'^2-\frac{(\alpha+\pi m)^2}{\sin^2\alpha}\right)}, \tag{25}$$

We now evaluate (24) using equation (72) derived in Appendix B.

$$\sum_{n=-\infty}^{+\infty}\frac{1}{(\pi n-\varphi)^2(\pi n-\theta)} = \frac{1}{(\varphi-\theta)\sin^2\varphi}-\frac{\cot\theta-\cot\varphi}{(\varphi-\theta)^2}$$

Rewriting (24):

$$-\Delta\omega(\alpha) = \frac{1}{2\delta_o}R^2ab\sin^4\alpha\Lambda$$

with

$$\begin{aligned}
\Lambda &= \sum_{m=-\infty}^{\infty}\left(\frac{1}{((\delta_o-\alpha)-\pi m)}+\frac{1}{((\delta_o+\alpha)+\pi m)}\right)\frac{1}{(\alpha+\pi m)^2}\\
&= \frac{1}{\delta_o\sin^2\alpha}+\frac{\cot(\delta_o-\alpha)+\cot\alpha}{\delta_o^2}+\frac{1}{\delta_o\sin^2\alpha}+\frac{\cot(\delta_o+\alpha)-\cot\alpha}{\delta_o^2}\\
&= \frac{2}{\delta_o\sin^2\alpha}+\frac{\cot(\delta_o-\alpha)+\cot(\delta_o+\alpha)}{\delta_o^2}\\
&= \frac{2}{\delta_o\sin^2\alpha}\left(1+\frac{\sin^2\alpha\sin 2\delta_o}{2\delta_o\sin(\delta_o-\alpha)\sin(\delta_o+\alpha)}\right)
\end{aligned}$$

we find

$$-\Delta\omega(\alpha)=\left(\frac{v}{\omega_o}\right)^2 ab\left(1+\frac{\sin^2\alpha\sin 2\delta_o}{2\delta_o\sin(\delta_o-\alpha)\sin(\delta_o+\alpha)}\right) \tag{26}$$

This formula was originally derived in [10], (equ. 78) by direct solution of the classical Bloch equations and the result shows the equivalence of the two methods.

## 2.2 Influence of Gas collisions

### 2.2.1 The collision-free velocity correlation function as a sum of harmonic oscillators

Substituting (20) into (18), we obtain for the velocity autocorrelation function:

$$\psi(\alpha,t)=\frac{2v^2\sin^2\alpha}{\tau_w^2}\sum_{n=-\infty}^{\infty}\left[\frac{\cos\omega_n^+(\alpha)\,t}{\left(\omega_n^+(\alpha)\right)^2}+\frac{\cos\omega_n^-(\alpha)\,t}{\left(\omega_n^-(\alpha)\right)^2}\right] \tag{27}$$

$$=\frac{2\sin^2\alpha}{\tau_w^2}\sum_{n=-\infty}^{\infty}\left[\frac{\psi_n^+(\alpha,t)}{\left(\omega_n^+(\alpha)\right)^2}+\frac{\psi_n^-(\alpha,t)}{\left(\omega_n^-(\alpha)\right)^2}\right] \tag{28}$$

i.e. a sum of oscillating terms $\left(\psi_n^{\pm}(\alpha,t)=v^2\cos\omega_n^{\pm}(\alpha)\,t\right)$ with different frequencies. Each term obeys an equation:

$$\frac{d^2\psi_n^{\pm}(\alpha,t)}{dt^2}+(\omega_n^{\pm}(\alpha))^2\psi_n^{\pm}(\alpha,t)=0. \tag{29}$$

Notice that the fundamental frequency $\omega_0^+(\alpha)$ coincides with (8). The corresponding term obviously dominates in the decomposition (28).

### 2.2.2 Velocity correlation function in the limit of short gas-collision times

We consider a particle that moves among scattering centers. If $\tau_c$ is the average time between collisions the velocity autocorrelation function will have the form

[14], [15].

$$\psi(t) \equiv \langle \vec{v}(t)\vec{v}(0)\rangle = v^2\, e^{-\frac{t}{\tau_c}}. \tag{30}$$

In the other words, $\psi(t)$ obeys the equation:

$$\frac{d\psi(t)}{dt} + \frac{1}{\tau_c}\psi(t) = 0. \tag{31}$$

### 2.2.3 Combined influence of gas and specular wall collisions

The velocity autocorrelation function in the absence of collisions is given by the sum of the motions of a group of harmonic oscillators (28). In the presence of gas collisions the individual oscillators $\psi_n^{\pm}(\alpha, t)$ will obey the equation for a damped harmonic oscillator which is the combination of (31) and (29), i.e.

$$\frac{d^2\psi_n(t)}{dt^2} + \frac{1}{\tau_c}\frac{d\psi_n(t)}{dt} + \omega_n^2\psi(t) = 0, \tag{32}$$

with the initial condition:

$$\psi_n^{\pm}(\alpha, 0) = v^2. \tag{33}$$

The boundary conditions (4) and (5) satisfied by $\psi(t)$ mean that

$$\int_0^{\tau} \psi_n(\alpha, t)dt \longrightarrow 0, \qquad \text{when} \qquad \tau \to \infty. \tag{34}$$

Generally, the equation for a damped harmonic oscillator (32) has the general solution:

$$\psi(t) = c_1 e^{-\eta_1 t} + c_2 e^{-\eta_2 t}, \tag{35}$$

where

$$\eta_1 = \frac{1}{2\tau_c} + \sqrt{\frac{1}{4\tau_c^2} - \omega^2}\,, \qquad \eta_2 = \frac{1}{2\tau_c} - \sqrt{\frac{1}{4\tau_c^2} - \omega^2}\,. \tag{36}$$

Taking into account boundary conditions (33) and (34), we get:

$$\psi_n(t) = \frac{v^2\eta_1}{\eta_1 - \eta_2}\left(e^{-\eta_1 t} - \frac{\eta_2}{\eta_1}e^{-\eta_2 t}\right). \tag{37}$$

The correlation function (4) takes the form (Eq. 36, [11]):

$$R_n(\alpha, \tau) = 2\int_0^{\tau} \psi_n(\alpha, t)dt = \frac{2v^2}{\eta_1 - \eta_2}\left(1 - e^{-(\eta_1 - \eta_2)\tau}\right)e^{-\eta_2\tau},$$

The last expression can be rewritten in the form:

$$R_n(\alpha, \tau) = \frac{2\lambda v}{s(\omega, \tau_c)}e^{-t/2\tau_c}\left(e^{s(\omega,\tau_c)t/2\tau_c} - e^{-s(\omega,\tau_c)t/2\tau_c}\right), \tag{38}$$

with

$$\lambda = v\tau_c, \qquad s(\omega, \tau_c) = \sqrt{1 - 4\omega^2\tau_c^2}. \tag{39}$$

We then have for a single oscillator (see equation 1)

$$\delta\omega_n = \frac{ab}{2} \lim_{t\to\infty} \int_0^t R_n(\tau) \cos(\omega_0\tau) d\tau = abS_{n,d}(\omega_o) \tag{40}$$

$$\begin{aligned} S_{n,d}(\omega_o) &= -v^2 \frac{\left(\omega_o^2 - \omega_n^2\right)}{\left(\left(\omega_o^2 - \omega_n^2\right)^2 + \frac{\omega_o^2}{\tau_c^2}\right)} \\ &= -R^2 \frac{\left(\omega_o'^2 - \omega_n'^2\right)}{\left(\left(\omega_o'^2 - \omega_n'^2\right)^2 + \omega_o^2 r_o^2\right)} \end{aligned} \tag{41}$$

where we again introduced $\omega_o' = \omega_o R/v$ and $r_o = R/\lambda_c(v)$ with $\lambda_c(v)$ the velocity dependent mean free path. The frequency shift will then be a sum of such terms for each of the oscillators as in (25).

Comparing to the collision-free case in (25) we see that in the presence of damping the frequency shift will be given by

$$-\Delta\omega(\alpha) = R^2 ab \sin^2\alpha \sum_{m=-\infty}^{\infty} \frac{1}{(\alpha + \pi m)^2} \left[ \frac{\left(\omega_o'^2 - \frac{(\alpha+\pi m)^2}{\sin^2\alpha}\right)}{\left(\left(\omega_o'^2 - \frac{(\alpha+\pi m)^2}{\sin^2\alpha}\right)^2 + \omega_o'^2 r_o^2\right)} \right] \tag{42}$$

that is we go from the collision free case to the case of gas collisions by replacing

$$f_\alpha(\omega') = \frac{1}{\left(\omega_o'^2 - \frac{(\alpha+\pi m)^2}{\sin^2\alpha}\right)}$$

in (25) by the square bracket in (42) or by replacing $f_\alpha(\omega')$ by $f_\alpha\left(\omega'\sqrt{1 + i\frac{r_o}{\omega'}}\right)$ and taking the real part. Since we have evaluated the summation (25) we obtain the frequency shift by making the equivalent transformation to (26)

$$-\Delta\omega(\alpha) = R^2 ab \sin^2\alpha \,\mathrm{Re}\left\{ F_P(\alpha, \delta = \delta_o\sqrt{1 + \frac{i}{\omega_o\tau_c}}) \right\} \tag{43}$$

where

$$F_P(\alpha, \delta) = \left(1 + \frac{\sin^2\alpha \sin 2\delta}{2\delta \sin(\delta - \alpha) \sin(\delta + \alpha)}\right) \frac{1}{\delta^2}$$

(remember $\delta_o = \omega_o\tau_w/2$). For a fixed velocity we average over $\alpha$, according to (10):

$$\Delta\omega = \int_0^{\pi/2} d\alpha P(\alpha) \Delta\omega(\alpha) \tag{44}$$

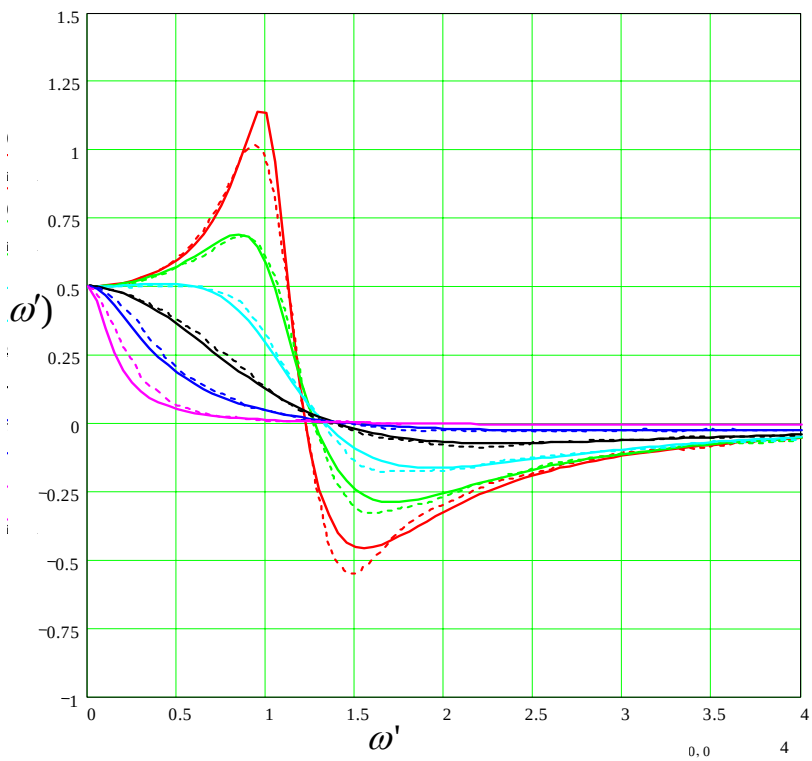


Figure 3: Normalized frequency shift for a constant velocity as a function of normalized applied frequency, $\omega' = \omega_o R/v$, for different values of the damping parameter $r_o = R/\lambda$. Solid curves - results of the analytic function, equations (43) and (44). Dotted lines numerical simulations from ref. [11]. red - $r_o = .2$, green - $r_o = .5$, cyan - $r_o = 1$, black $r_o = 2$, blue - $r_o = 4$, magenta - $r_o = 10$.

The results are shown in fig. 3 in comparison with the results of the numerical simulations obtained in[11].

We see the agreement is quite good, within the uncertainties of the numerical simulations. The agreement in the region of the zero-crossings is excellent.

# 3 Frequency shift averaged over velocity distribution, temperature dependence

In the neutron edm experiment proposed by the EDM collaboration [12] a dilute solution of $He^3$ dissolved in superfluid $He^4$ will be used as a co-magnetometer to monitor magnetic field fluctuations. As such the $He^3$ will see essentially the same magnetic and electric fields as the neutrons and will be subject to the linear E field systematic under discussion.

Using the analytical form of the correlation function we can average the $E$ field proportional frequency shift over the Maxwell velocity distribution for a gas in thermal equilibrium. We take the realistic case of the mean free path for collisions proportional to velocity, (collision time $\tau_c$, independent of velocity). corresponding to a cross section $\sim 1/v$. This applies to $He^3$ in superfluid $He^4$. Since the velocity of the $He^3$ is much less than the phonon velocity ($2.2 \times 10^4 cm/\sec$) the collision rate of phonons with the $He^3$ will be independent of the $He^3$ velocity. Thus in a time $\tau_c$ a $He^3$ with velocity $v$, will move a distance $\lambda_v(T) = v\tau_c(T)$. We will obtain the collison time, $\tau_c(T)$, from the measured values of the diffusion constant for $He^3$ in superfluid $He^4$ [13]:

$$D\left(T\right) = \frac{1.6}{T^7}\ cm^2/\sec$$

Then $\tau_c(T) = 3D\left(T\right)/\left\langle v^2\right\rangle_T$ where $\left\langle v^2\right\rangle_T$ is the mean square velocity in a volume of gas. $r_o$ is defined as

$$r_o = \frac{R}{\lambda_v(T)} = \frac{R}{v\tau_c(T)} = \frac{R}{y\beta\left(T\right)\tau_c(T)} \equiv \frac{\overline{r}_o}{y}$$

with $y = v/\beta(T)$ and $\beta(T)$ is the most probable velocity in a volume. $R$ the radius of the cylindircal vessel is taken as $R = 25cm$ in the numerical calculations. Both $\left\langle v^2\right\rangle_T$ and $\beta(T)$ are calculated using the effective mass of $He^3$ in the superfluid: $m_3 = 7.2$ amu.

For a single velocity the frequency shift will be given by (42) or (43) averaged over $\alpha$. Using Eq. (10)

$$\begin{aligned} -\Delta\omega &= \int_0^{\pi/2} d\alpha P\left(\alpha\right)\Delta\omega\left(\alpha\right) \\ &= R^2 ab\frac{4}{\pi}\int_0^{\pi/2} d\alpha \sin^4\alpha \sum_m \frac{1}{\left(\alpha+\pi m\right)^2}\left[\frac{\left(\omega_o'^2 - \frac{(\alpha+\pi m)^2}{\sin^2\alpha}\right)}{\left(\left(\omega_o'^2 - \frac{(\alpha+\pi m)^2}{\sin^2\alpha}\right)^2 + \omega_o'^2 r_o^2\right)}\right] \end{aligned} \tag{45}$$

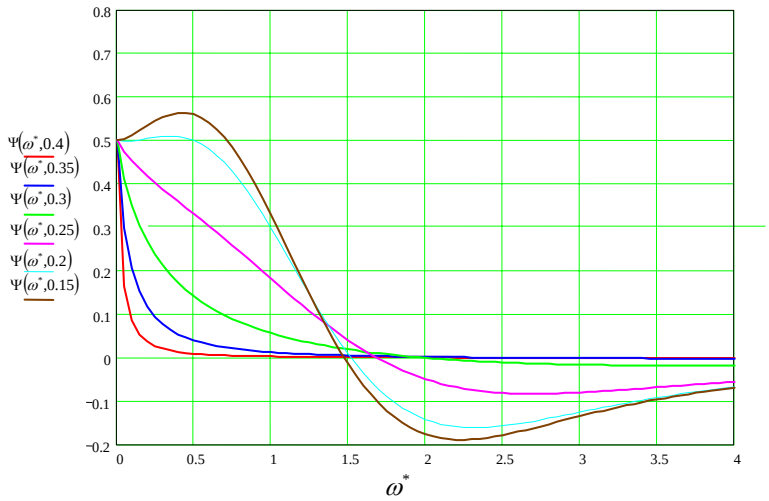


Figure 4: Normalized velocity averaged frequency shift vs. reduced frequency $\omega^*=\omega_o R/\beta\,(T)$ for various temperatures using the temperature-dependent mean free path for $He^3$ in $He^4$.

We now replace $\omega_o' = \omega_o R/v = \omega_o R/y\beta(T) = \omega_o^*/y$ where $\omega_o^* = \omega_o R/\beta(T)$. Then

$$-\Delta\omega(y) = R^2 ab\frac{4}{\pi}\int_0^{\pi/2} d\alpha \sin^4\alpha \sum_m \frac{1}{(\alpha+\pi m)^2}\left[\frac{\left(\omega_o^{*2} - \frac{(\alpha+\pi m)^2}{\sin^2\alpha}y^2\right)y^2}{\left(\omega_o^{*2} - \frac{(\alpha+\pi m)^2}{\sin^2\alpha}y^2\right)^2 + \omega_o^{*2}\overline{r}_o^2}\right]$$

where $\overline{r}_o = r_o y = R/\overline{\lambda}_c$. Averaging over the two dimensional velocity distribution $(\overrightarrow{v}_\perp)$ we obtain for the normalized frequency shift

$$\Psi\left(\omega_o^*, T\right) = \frac{2}{abR^2}\int y e^{-y^2}\Delta\omega(y)dy \tag{46}$$

The results are plotted in fig. 4 which shows the frequency shift as a function of reduced frequency $\omega^*$ for various temperatures.

In figure 5 we show an expanded plot of the normalized frequency shift in the region near the zero crossings as a function of temperature for fixed $\omega^*\,(T)$.

It is evident that the collisional damping can lead to large reductions in the effect for $He^3$.

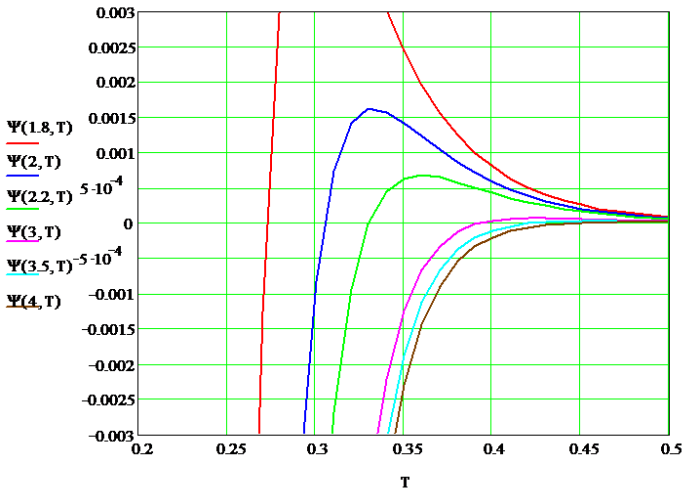


Figure 5: Normalized velocity-averaged frequency shift, $\Psi(\omega^*, T)$ vs. temperature, $T$, for various reduced frequencies $\omega^*=\omega_o R/\beta(T)$ using the temperature-dependent mean free path for $He^3$ in $He^4$

# 4 Non-specular wall collisions

In this section we give a brief description of how non-specular wall collisions can be included in the calculation. Detailed study of this problem will be left for a future work.

In the preceding sections we have shown that the velocity autocorrelation function can be regarded as the result of the sum of harmonic oscillators of different frequencies.

Considering one such oscillator during one traversal of the cell the oscillator will undergo a phase change

$$\phi = \omega\tau_w = 2\alpha. \tag{47}$$

A non-specular reflection from the wall would result in a change in the incident angle for the next collision, $\chi$, by a random amount $\Delta\chi$ and hence a change in the accumulated oscillator phase by

$$\Delta\phi = 2\Delta\chi, \tag{48}$$

because $\chi = \frac{\pi}{2} - \alpha$.

Since the changes $\Delta\phi$ are random the phase $\phi$ will make a random walk so that after a time $t$ we will have

$$\left\langle (\Delta\phi)^2 \right\rangle_t = 4 \left\langle (\Delta\chi)^2 \right\rangle \frac{t}{\tau_w}. \tag{49}$$

in the case of small $\Delta\phi \ll 1$. Averaging the amplitude of the oscillator over the distribution of $\Delta\phi$, assuming a Gaussian distribution for $\Delta\phi$, the amplitude will be reduced by

$$\langle \cos\phi \rangle \simeq e^{\left(-\frac{1}{2}\left\langle (\Delta\phi)^2 \right\rangle_t\right)} \simeq \exp\left(-\frac{t}{2\tau_{ns}}\right), \tag{50}$$

where

$$\frac{1}{\tau_{ns}} = \frac{4\left\langle (\Delta\chi)^2 \right\rangle}{\tau_w}. \tag{51}$$

Thus non-specular collisions can be taken into account by the change of the damping term in (32):

$$\frac{1}{\tau_c} \longrightarrow \frac{1}{\tau_c} + \frac{1}{\tau_{ns}}. \tag{52}$$

Non-specular wall collisions will thus have a different influence than the gas collisions because of the dependence of $\tau_w \sim \sin\alpha$ on $\alpha$.

# 5 Arbitrary Magnetic field geometry

Our discussion has assumed a magnetic field configuration with $G_z = \partial B_z/\partial z$ constant. Pendlebury et al [10] have shown, using a geometric phase argument, that regardless of the field geometry the effect only depends on the volume average of $G_z$ in the high frequency (called by them the adiabatic) limit. In a recent note, Harris and Pendlebury [16] have shown that in the case of a field produced by a dipole external to the measurement cell, this does not hold in the low frequency (diffusion) limit. In this section we discuss this problem using our correlation function approach in order to give some physical insight into what is happening and display details of the transition from one case to another.

## 5.1 Short time (high frequency, adiabatic) limit of the correlation function

Reference [11], has shown that the systematic edm is given, in general, as the Fourier transform of a certain correlation function of the time varying field seen by the neutrons as they move through the apparatus. Equation (23) of that paper gives the frequency shift proportional to $E$ as ($\overrightarrow{\omega}(t)$ lies in the $x, y$ plane)

$$\delta\omega_E(t) = -\frac{1}{2}\int_0^t d\tau \left\{ \begin{array}{c} \cos\omega_o\tau\left[\overrightarrow{\omega}(t)\times\overrightarrow{\omega}(t-\tau)\right] \\ +\sin\omega_o\tau\left[\omega_x(t)\,\omega_x(t-\tau)+\omega_y(t-\tau)\,\omega_y(t)\right] \end{array} \right\} \quad (53)$$

It can be shown that the term multiplying $\sin\omega_o\tau$ goes to zero on averaging over a uniform velocity distribution $\left(\langle v_x v_y\rangle = 0, \quad v_x^2 = v_y^2 = v^2/2\right)$ and using $\overrightarrow{\nabla}\times\overrightarrow{B} = 0$.Then, for short times, $\tau$,

$$\begin{aligned}\delta\omega(t) &= -\frac{1}{2}\int_0^t d\tau\left\{\cos\omega_o\tau\left[\overrightarrow{\omega}(t)\times\left(\overrightarrow{\omega}(t)-\frac{d\overrightarrow{\omega}}{dt}\tau+\frac{1}{2}\frac{d^2\overrightarrow{\omega}}{d\tau^2}\tau^2+...\right)\right]\right\} \\ &= -\frac{1}{2}\int_0^t d\tau\left\{\cos\omega_o\tau\left[-\overrightarrow{\omega}(t)\times\left(\frac{d\overrightarrow{\omega}}{dt}\tau-\frac{1}{2}\frac{d^2\overrightarrow{\omega}}{d\tau^2}\tau^2+...\right)\right]\right\} \quad (54)\end{aligned}$$

We are considering values of $\tau$ so small that the velocity doesn't change in that time interval $(\tau < \tau_{coll})$.

Then

$$\begin{aligned}\overrightarrow{\omega}(t) &= \gamma\left(\overrightarrow{B}_{xy}(t)+\overrightarrow{v}/c\times\overrightarrow{E}\right) \\ \frac{d\overrightarrow{\omega}}{dt} &= \gamma\left(\overleftrightarrow{\nabla B}\left(\overrightarrow{x}(t)\right)\cdot\overrightarrow{v}\right) \\ \frac{d^2\overrightarrow{\omega}}{d\tau^2} &= \gamma\sum_{i,j}\frac{\partial^2\overrightarrow{B}}{\partial x_i\partial x_j}v_i v_j\end{aligned}$$

and

$$\delta\omega(t) = -\frac{\gamma}{2c}\int_0^t d\tau \cos\omega_o\tau \left[-\left(\overrightarrow{B}_{xy}(t) + \overrightarrow{v}\times\overrightarrow{E}\right)\times\left(\frac{\partial\overrightarrow{\omega}}{\partial t}\tau - \frac{1}{2}\frac{\partial^2\overrightarrow{\omega}}{\partial\tau^2}\tau^2 + ...\right)\right] \tag{55}$$

The term linear in $\overrightarrow{E}$ and $\tau$ is then

$$\begin{aligned}\delta\omega(t) &= -\frac{\gamma^2}{2c}\int_0^t d\tau\cos\omega_o\tau\left[\left(\overleftrightarrow{\nabla B}\cdot\overrightarrow{v}\right)\tau\times\left(\overrightarrow{v}\times\overrightarrow{E}\right)\right] \\ &\equiv \frac{\gamma E}{2}\int_0^t d\tau\cos\omega_o\tau\,(\alpha\tau)\end{aligned} \tag{56}$$

defining

$$\alpha = \frac{\gamma}{c}\left(\overleftrightarrow{\nabla B}\cdot\overrightarrow{v}\right)\cdot\overrightarrow{v}$$

We have now calculated the correlation function for short times. It starts at zero at $\tau = 0$ and rises as $\alpha\tau$. Eventually it will reach a maximum. By concentrating on the high frequency ($\omega_o$) behavior of $\delta\omega$ the result will be independent of the details of the maximum, depending only on $\alpha$. Thus we can replace $\alpha\tau$ in (56) by $\sin\alpha\tau$ or any function with the same initial slope. Thus we are led to take

$$\begin{aligned}\delta\omega(t) &\equiv \frac{\gamma E}{2}\lim_{\omega_o\to\infty}\int_0^t d\tau\cos\omega_o\tau\sin\alpha\tau \\ &= \lim_{\omega_o\to\infty}\frac{\gamma E}{2}\frac{\alpha}{\omega_o^2-\alpha^2} = \frac{\gamma E}{2}\frac{\alpha}{\omega_o^2} \\ &= \frac{E}{2cB_o^2}\left(\overleftrightarrow{\nabla B}\cdot\overrightarrow{v}\right)\cdot\overrightarrow{v}\end{aligned}$$

Introducing components, taking averages and using $\overrightarrow{\nabla}\cdot\overrightarrow{B} = 0$ this reduces to

$$\overline{\delta\omega}_{geo} = -Ev^2\frac{1}{4cB_o^2}\left\langle\frac{\partial B_z}{\partial z}\right\rangle \tag{57}$$

in agreement with Eq.. (2) of [11] if, in that equation, $R^2\omega_r^2$ is replaced by $\langle v^2\rangle = v^2/2$. We have shown that in the adiabatic (short time) limit the systematic (false) edm effect depends only on $\langle\frac{\partial B_z}{\partial z}\rangle$ regardless of the geometry of the magnetic field, a result obtained previously by Pendlebury et al [10] and confirmed in [16].

The next order term in (55) is easily seen to be of order $v^3\tau^2$ and so will average to zero, the next term which contributes will be of order $v^4\tau^3$ and so will be negligible in the short time limit we are considering. The condition for this to be valid is $(v\tau/L)^2 \ll 1$ where $L$ is the scale of variations in the applied magnetic field $\left(\frac{\partial B_z}{\partial z}\frac{1}{B_z}\sim L^{-1}\right)$

## 5.2 Longer time behavior of the correlation function

For long times the expansion (54) is clearly not valid and we must expand in a series in the spatial coordinates. We start from

$$\delta\omega = -\frac{\gamma^2}{2}\int d\tau \cos\omega_o\tau \left\langle \overrightarrow{B}'(t) \times \overrightarrow{B}'(t-\tau)\right\rangle_z$$

where $b = E/c$, the brackets represent an ensemble average and

$$\begin{aligned} B'_x &= B_x\left(\overrightarrow{r}(t)\right) - bv_y \\ B'_y &= B_y\left(\overrightarrow{r}(t)\right) + bv_x \end{aligned}$$

Then we write

$$\left\langle \overrightarrow{B}'(t) \times \overrightarrow{B}'(t-\tau)\right\rangle_z = b\left\langle \begin{array}{c} B_x\left(\overrightarrow{r}(t)\right) v_x(t-\tau) - v_y(t) B_y\left(\overrightarrow{r}(t-\tau)\right) \\ -\left(B_x\left(\overrightarrow{r}(t-\tau)\right) v_x(t) - v_y(t-\tau) B_y\left(\overrightarrow{r}(t)\right)\right) \end{array}\right\rangle \tag{58}$$

and expand the field in a Taylor series

$$\begin{aligned} B_x\left(\overrightarrow{r}(t)\right) = &\left(B_x(0,0,0,t) + \left.\frac{\partial B_x}{\partial x}\right|_o x(t) + \left.\frac{\partial B_x}{\partial y}\right|_o y(t) + \left.\frac{\partial B_x}{\partial z}\right|_o z(t)\right) + \\ &+\left(\left.\frac{\partial^2 B_x}{\partial x^2}\right|_o x^2(t) + \left.\frac{\partial^2 B_x}{\partial y^2}\right|_o y^2(t) + \left.\frac{\partial^2 B_x}{\partial z^2}\right|_o z^2(t)\right) \\ &+\left(\left.\frac{\partial^2 B_x}{\partial x\partial y}\right|_o y(t)x(t) + \left.\frac{\partial^2 B_x}{\partial y\partial z}\right|_o z(t)\,y(t) + \left.\frac{\partial^2 B_x}{\partial z\partial x}\right|_o x(t)\,z(t)\right) \\ &+\left(\left.\frac{\partial^3 B_x}{\partial x^3}\right|_o x^3(t) + \left.\frac{\partial^3 B_x}{\partial y^3}\right|_o y^3(t) + ....\right) \end{aligned}$$

(similarly for $B_y$). Concentrating on the first and last terms in (58) and noting that there are no correlations between any functions $f(x_i, v_i)$ and $g(x_j, v_j)$ we find

$$\sum_{x_i=x,y}\left\langle\left(\left.\frac{\partial B_{x_i}}{\partial x_i}\right|_o x_i(t) + \left.\frac{\partial^2 B_{x_i}}{\partial x_i^2}\right|_o x_i^2(t) + \left.\frac{\partial^3 B_x}{\partial x_i^3}\right|_o x_i^3(t)\ldots\right) v_{x_i}(t-\tau) - \{(t) \Leftrightarrow (t-\tau)\}\right\rangle$$

where the second term is obtained from the first by interchanging $(t)$ and $(t-\tau)$.

By symmetry we see that $\left\langle x_i^2(t)\, v_{x_i}(t-\tau)\right\rangle = 0$ so that the next contributing term will be proportional to

$$\left.\frac{\partial^3 B_x}{\partial x_i^3}\right|_o \left\langle x_i^3(t)\, v_{x_i}(t-\tau)\right\rangle$$

The first order term will be proportional to

$$\frac{\partial B_x}{\partial x} + \frac{\partial B_y}{\partial y} = -\frac{\partial B_z}{\partial z}$$

We see that the condition

$$\left.\frac{\partial^3 B_{x_i}}{\partial x_i^3}\right|_o R^2 \ll \left.\frac{\partial B_{x_i}}{\partial x_i}\right|_o \quad or \quad \frac{R^2}{L^2} \ll 1$$

will insure that the higher order terms can be neglected. In the extreme case considered by Harris and Pendlebury, [16], this condition is strongly violated so our method cannot be applied since the higher order terms remain significant.

# 6 Discussion

We have derived the analytic form of the (2 dimensional) velocity autocorrelation function (vcf) for particles moving in a specularly reflecting cylindrical vessel. As the vcf determines the position-velocity correlation function (pvcf) we have calculated the Fourier transform of this latter function thus obtaining the frequency shift for a single group of trajectories characterized by the angle $\alpha$. Our results duplicate the analytic result found in [10] by direct solution of the classical Bloch equations. We then show how the analytic formula for single trajectories can be extended to take into account gas collisions and obtain (after integrating over trajectories) the linear in $E$ frequency shift for a single velocity which has been studied previously, our results agreeing with those obtained by numerical simulation of the pvcf with collisions in [11]. We then perform an average over the Maxwell velocity distribution using the temperature dependent collision times appropriate for $He^3$ diffusing in superfluid $He^4$ and obtain the temperature dependence of the frequency shift in this case. Figures 4 and 5, which are based on an exact average over the Maxwell distribution of the $He^3$ velocities, imply that one should be able to control the effect to high degree.

Due to the heavy mass and slow velocity of the $He^3$, Baym and Ebner [17] conclude that the phonon scattering on $He^3$ is predominantly elastic. Single phonon absorption is kinematically forbidden on a single $He^3$ and can only take place as a result of $He^3 - He^3$ collisions which will be negligible for the low $He^3$ densities considered here. Thus our approach, where we calculate the correlation function for an ensemble of trajectories with constant $He^3$ velocity and then average the result over the velocity distribution should be an excellent approximation.

In addition we have shown that by varying the gradients to larger values it will be possible to measure the spectrum of the velocity correlation function directly, thus allowing a precise determination of the frequency dependence of the frequency shift under the exact experimental conditions. and have discussed the conditions under which the frequency shift can be shown to depend only on the volume average of $\partial B_z/\partial z$.

# 7 Appendix A

For a general orbit the velocity autocorrelation function is not periodic. However, using the form (15) for the correlation function, we can calculate its Fourier

transform straighforwardly:

$$\Psi(\alpha,\omega)=\frac{v^2}{\pi}\sum_{l=0,1,2\ldots}\left(A_l\int\limits_{l\tau_w}^{(l+1)\tau_w}\cos(\omega t)dt+B_l\int\limits_{l\tau_w}^{(l+1)\tau_w}\frac{t}{\tau_w}\cos(\omega t)dt\right). \quad (59)$$

Now ($\delta=\omega\tau_w$)

$$\int\limits_{l\tau_w}^{(l+1)\tau_w}\cos(\omega t)dt=\frac{\sin((l+1)\delta)-\sin(l\delta)}{\omega}, \quad (60)$$

$$\int\limits_{l\tau_w}^{(l+1)\tau_w}\frac{t}{\tau_w}\cos(\omega t)dt=\frac{(l+1)\sin((l+1)\delta)-l\sin(l\delta)}{\omega}+\frac{\cos((l+1)\delta)-\cos(l\delta)}{\omega\delta}, \quad (61)$$

We separate out the terms in (59), according to whether they come from sines or cosines in (60) or (61).

Taking the sine terms first we have

$$\begin{aligned}&((l+1)\cos(2l\alpha)-l\cos(2\,(l+1)\,\alpha))\,(\sin((l+1)\,\delta)-\sin(l\delta))-\\&(\cos(2\,(l+1)\,\alpha)-\cos 2l\alpha)\,((l+1)\,(\sin((l+1)\,\delta)-l\sin(l\delta))\\&=\sin((l+1)\,\delta)\,(\cos 2\,(l+1)\,\alpha)-\sin(l\delta)\cos(2l\alpha),\end{aligned} \quad (62)$$

the sine terms in $\Psi\,(\alpha,\omega)$ are

$$\begin{aligned}\Psi_s\,(\alpha,\omega)&=\frac{v^2}{\pi\omega}\sum_{l=0}^{\infty}(\sin((l+1)\,\delta)\cos(2\,(l+1)\,\alpha)-\sin(l\delta)\cos(2l\alpha))\\&=\frac{v^2}{\pi\omega}\sum_{l=0}^{N}(f\,(l+1)-f(l))=\frac{v^2}{\pi\omega}\begin{pmatrix}f\,(1)-f\,(0)+\\f\,(2)-f\,(1)+\\\ldots+\\f\,(N)-f\,(N-1)+\\f\,(N+1)-f\,(N)\end{pmatrix}\\&=\frac{v^2}{\pi\omega}f\,(N+1)=\frac{v^2}{\pi\omega}\sin((N+1)\,\delta)\cos(2\,(N+1)\,\alpha).\end{aligned} \quad (63)$$

Turning to the cosine terms we have

$$\begin{aligned}\Psi_c\,(\alpha,\omega)&=\frac{v^2}{\pi\omega\delta}\sum_{l=0}^{\infty}B_l\,(\cos((l+1)\,\delta)-\cos(l\delta))=\\&=\frac{v^2}{\pi\omega\delta}\left(\sum_{l=0}^{N}B_l\cos((l+1)\,\delta)-\sum_{l=0}^{N}B_l\cos(l\delta)\right)\\&=\frac{v^2}{\pi\omega\delta}\left(B_N\cos((N+1)\,\delta)-B_0+\sum_{l=1}^{N}(B_{l-1}-B_l)\cos(l\delta)\right),\end{aligned} \quad (64)$$

where

$$B_{l-1} - B_l = 2\cos(2l\alpha) - \cos(2(l-1)\alpha) - \cos(2(l+1)\alpha)$$
$$= 2\cos(2l\alpha)(1-\cos(2\alpha)) = 4\sin^2\alpha\cos(2l\alpha).$$

Then

$$\Psi_c(\alpha,\omega) = \frac{v^2}{\pi\omega\delta}\left(1 - \cos 2\alpha + B_N\cos((N+1)\delta) + 4\sin^2\alpha\sum_{l=1}^{N}\cos(l\delta)\cos(2l\alpha)\right), \tag{65}$$

$$h(\delta,\alpha) = \sum_{l=1}^{N}\cos(l\delta)\cos(2l\alpha) = \frac{1}{2}\sum_{l=1}^{N}(\cos(l(\delta+2\alpha)) + \cos(l(\delta-2\alpha)))$$
$$= \frac{1}{2}\left(\frac{\sin\left(\left(N+\frac{1}{2}\right)(\delta+2\alpha)\right)}{2\sin\frac{(\delta+2\alpha)}{2}} + \frac{\sin\left(\left(N+\frac{1}{2}\right)(\delta-2\alpha)\right)}{2\sin\frac{(\delta-2\alpha)}{2}} - 1\right) \tag{66}$$

except when $\delta \pm 2\alpha = 2\pi n$ in which case $h(\delta,\alpha) = N/2$.

So (we will take the limit as $N \to \infty$)

$$\lim_{N\to\infty}\frac{\sin(N+\frac{1}{2})x}{\sin\frac{1}{2}x} = \lim_{N\to\infty}\left(\frac{\sin Nx\cos\frac{1}{2}x}{\sin\frac{1}{2}x} + \cos Nx\right) = \lim_{N\to\infty}\left(\frac{\sin Nx\cos\frac{1}{2}x}{\sin\frac{1}{2}x}\right) = 0$$

except when $x = 2\pi m$,

$$\lim_{N\to\infty}\left(\frac{\sin Nx\cos\frac{1}{2}x}{\sin\frac{1}{2}x}\right) = \sum_{m=-\infty}^{\infty} 2\pi\delta(x-2\pi m). \tag{67}$$

As a result (59) becomes ($\delta = \omega\tau_w$)

$$\Psi(\alpha,\omega) = \frac{v^2}{\pi\omega^2\tau_w}\sin^2\alpha\sum_{m=-\infty}^{\infty}\left(2\pi\delta(\omega\tau_w + 2\alpha - 2\pi m) + 2\pi\delta(\omega\tau_w - 2\alpha - 2\pi m)\right). \tag{68}$$

Using $\delta(\omega\tau_w + 2\alpha - 2\pi m) = \frac{1}{\tau_w}\delta\left(\omega + \frac{2\alpha - 2\pi m}{\tau_w}\right)$ we have finally

$$\Psi(\alpha,\omega) = \frac{2v^2\sin^2\alpha}{\omega^2\tau_w^2}\sum_{m=-\infty}^{\infty}\left(\delta\left(\omega + \frac{2\alpha-2\pi m}{\tau_w}\right) + \delta\left(\omega - \frac{2\alpha+2\pi m}{\tau_w}\right)\right)$$
$$= \frac{2v^2\sin^2\alpha}{\omega^2\tau_w^2}\sum_{m=-\infty}^{\infty}\left(\delta\left(\omega - \omega_m^+(\alpha)\right) + \delta\left(\omega - \omega_m^-(\alpha)\right)\right), \tag{69}$$

where $\omega_m^{\pm}(\alpha) = \frac{2(\pm\alpha+\pi m)}{\tau_w}$.

# 8 Appendix B

Using the formula [18]

$$\cot\theta = \frac{1}{\theta} + \frac{\theta}{\pi}\left(\sum_{n=-\infty}^{\infty}\right)' \frac{1}{n\,(\theta - n\pi)} = \sum_{n=-\infty}^{\infty} \frac{1}{\theta - n\pi}, \tag{70}$$

$\left(\sum' \text{ means } n = 0, \text{ excluded}\right)$one gets:

$$\frac{\cot\theta - \cot\varphi}{\varphi - \theta} = \sum_{n=-\infty}^{+\infty} \frac{1}{(\pi n - \varphi)(\pi n - \theta)}. \tag{71}$$

After differentiation with respect to $\varphi$ we obtain:

$$\sum_{n=-\infty}^{+\infty} \frac{1}{(\pi n - \varphi)^2(\pi n - \theta)} = \frac{1}{(\varphi - \theta)\sin^2\varphi} - \frac{\cot\theta - \cot\varphi}{(\varphi - \theta)^2}. \tag{72}$$

# References


[1] Weinberg, S. Proc. XXVI Inter. Conf. on High Energy Physics (Dallas, Texas) summary talk

[2] Pendlebury, JM and Hinds EA, NIM in Physics Research **A440**, 471 (2000)

[3] Golub, R and Lamoreaux, SK, Physics Reports, **237**, 1 (1994),

Harris, PG et al , PRL **82**, 904 (1999),

LANL EDM collaboration: "A new search for the neutron electric dipole moment", Los Alamos Report LA-UR 02-2331 (2002).

[4] Behr, JA et al, Eur. Phys. J. **A25**, 685 (2005)

[5] Berg, GPA et al, Nuclear Physics **A721**, 1107c (2003)

Schulte, E et al, 35th Meeting of the Division of Atomic, Molecular and Optical Physics, May 25-29, 2004, Tuscon AZ

Ahmad I et al, http://www-mep.phy.anl.gov/atta/research/radiumedm.html

Guest JR et al, Abstract KB.00011 2nd Joint Meeting of the Nuclear Physics Division of the APS and the Physical Society of Japan, Maui, Hawaii, Sept 18-22 (2005)

[6] Nuss-Warren et al, NIM in Physics Research **A533**, 275 (2004),

Abstrct KB.00010, 2nd Joint Meeting of the Nuclear Physics Division of the APS and the Physical Society of Japan, Maui, Hawaii, Sept 18-22 (2005)

[7] Rosenberry MA and Chupp TE, PRL **86**, 0031-9007 (2000)

Yoshimi A et al, Physics Letters, **A304**, 13 (2002) and

Abstract JB.00009, 2nd Joint Meeting of the Nuclear Physics Division of the APS and the Physical Society of Japan, Maui, Hawaii, Sept 18-22 (2005)

[8] Jacobs JP et al, Phys Rev **A52**, 3521 (1995)

[9] Commins, ED; Am. J. Phys. **59**, 1077 (1991)

[10] Pendlebury, JM *et al;* Phys. Rev. **A70**, 032102 (2004)

[11] Lamoreaux, SK and Golub, R; Phys. Rev **A71**, 032104 (2005)

[12] LANL EDM collaboration: "A new search for the neutron electric dipole moment", Los Alamos Report LA-UR 02-2331 (2002).

[13] Lamoreaux, SK *et al*; Europhys Lett. **58**, 718 (2002)

[14] McGregor, DD, Phys Rev **A41**, 2631 (1990)

[15] Papoulis, A, *Probability, Random Variables and Stochastic Processes,* McGraw Hill, NY (1965)

[16] Harris, PG and Pendlebury, JM, arxiv.org: physics/0510134, ct. 2005, Phys Rev **A73**, 014101 (2006)

[17] Baym, G and Ebner, C; Phys. Rev. **164**, 235 (1967)

[18] Gradshteyn, I.S. and Ryzhik, I.M., *Table of Integrals, Series and Products,* Academic Press, 1965, 1.421.3, p. 36.

Bromwich, T.J.I. . *An Introduction to the theory of infinite series,* Second edition,Macmillan, 1942, p.218, ($A_3$, $A_4$)

Many formulae of this type are derived in: Chrystal, G., *Algebra, an elementary text book for higher classes of secondary schools and for colleges. Part II*, Second Edition, 1900, chapter XXX.