Active and Passive Shielding of B_1 Coils

Mike Hayden / SFU

- Review of dressed-spin scenario
- Constraints for an EDM experiment
- Induced shielding currents
- Examples of coils used at SFU

Dressed-Spin Technique

- Apply a highly off-resonant B_1 (dressing) field at angular frequency ω
- Time average longitudinal magnetization is

$$\frac{\langle M_z \rangle_t}{M_0} = J_0\left(\frac{\gamma B_1}{\omega}\right)$$

- Spin dynamics in static field B_0 can be described in terms of an effective gyromagnetic ratio

$$\gamma_{eff} = \gamma J_0\left(\frac{\gamma B_1}{\omega}\right) < \gamma$$

Critical Dressing Field

- Relative ^{3}He-neutron precession frequency

$$\omega_{rel} = \left(\gamma_n^{eff} - \gamma_3^{eff}\right) B_0$$

- Two species behave as if they have the same γ if

$$\gamma_n J_0\left(\frac{\gamma_n B_1}{\omega}\right) - \gamma_3 J_0\left(\frac{\gamma_3 B_1}{\omega}\right) = 0$$

- This occurs when

$$\left.\begin{aligned} &\left(\frac{\gamma_n B_1}{\omega}\right) \approx 1.19 \\ \text{and}\quad &\gamma_n^{eff} \approx 0.65\gamma_n \end{aligned}\right\} \text{Critical Dressing}$$

- Field amplitude required to achieve effect at frequency ω

$$B_1 \approx 1.19\frac{\omega}{\omega_0}B_0$$

e.g. if B_0~1mG and ω/2π~1 kHz then B_1~1G

Constraints on B_1 for an EDM experiment

- Reasonably high level of field homogeneity over EDM cell

  - est.level of 1 part in 10^3
    [Golub & Lamoreaux, *Phys. Rep*. **237**, 1 (1994)]

  - penetrations and image currents could be problematic

- Shielding to minimize influence of B_1 fields outside of EDM cell

- Minimize Joule heating from currents associated with pulsed and/or CW B_1 fields

  a) Drive currents in B_1 coils

  b) Eddy currents in
     - passive rf shields
     - ferromagnetic B_0 shields
     - radiation shields

  } Heat load on refrigerator and systematic EDM effects

Passive shields can be made thinner at high frequencies
… at the expense of a greater heat load!

Skin depth in 'pure' Al, Cu: $\delta \sim \frac{0.25\text{mm}}{\sqrt{f_{\text{kHz}}}}$ at cryogenic temps

$T_c \sim 1$ K

Mathematical Formalism

Based on principles laid out by Turner and Bowley,
J. Phys. E: Sci. Instrum. **19**, 876 (1986).

Useful for the design of MRI gradient coils

Cylindrical coordinate system ρ, ϕ, z

Limit δ << thickness of shield

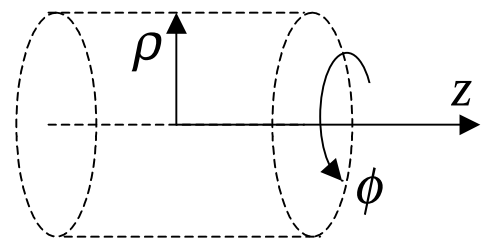

An arbitrary current

$$\vec{J}_a = \vec{F}(z,\phi)\,\delta(\rho - a)$$

constrained to flow on a cylindrical former of radius a
is (perfectly) shielded by a current

$$\vec{J}_b = \vec{f}(z,\phi)\,\delta(\rho - b)$$

flowing on a coaxial cylinder of radius $b > a$ if

$$f_z^m(k) = -F_z^m(k)\,\frac{a^2 I'_m(ka)}{b^2 I'_m(kb)}$$

$$f_\phi^m(k) = -F_\phi^m(k)\,\frac{a I'_m(ka)}{b I'_m(kb)}$$

where

$$f_z^m(k) = \frac{1}{2\pi}\int_{-\pi}^{\pi} d\phi \exp(-im\phi)\int_{-\infty}^{\infty} dz \exp(-ikz)\, f_z(\phi,z)$$

$$f_\phi^m(k) = \frac{1}{2\pi}\int_{-\pi}^{\pi} d\phi \exp(-im\phi)\int_{-\infty}^{\infty} dz \exp(-ikz)\, f_\phi(\phi,z)$$

etc. are essentially Fourier transforms of the currents

SFU Low-Field MRI System

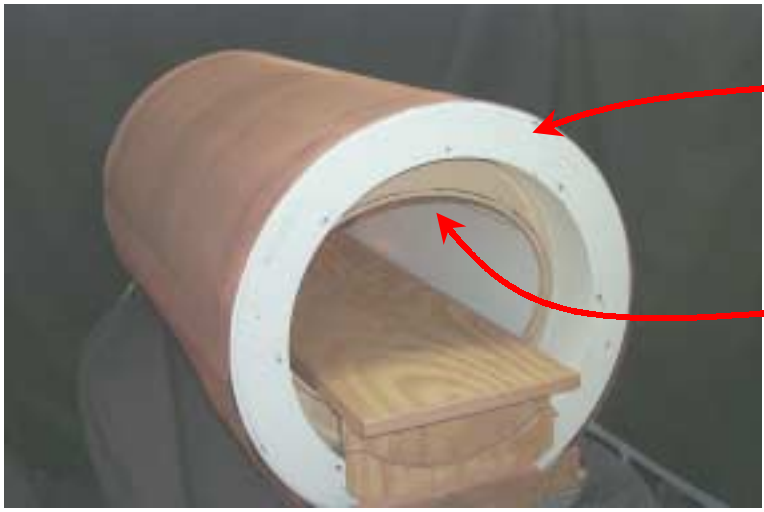

55cm id solenoidal magnet produces longitudinal B_0

Elliptical (or cylindrical) sinθ-like (cosθ-like) coil produces transverse B_1

Use active and/or passive shields
for B_1 coils as well as gradient coils

Contour map of B_x over ±15cm ROI

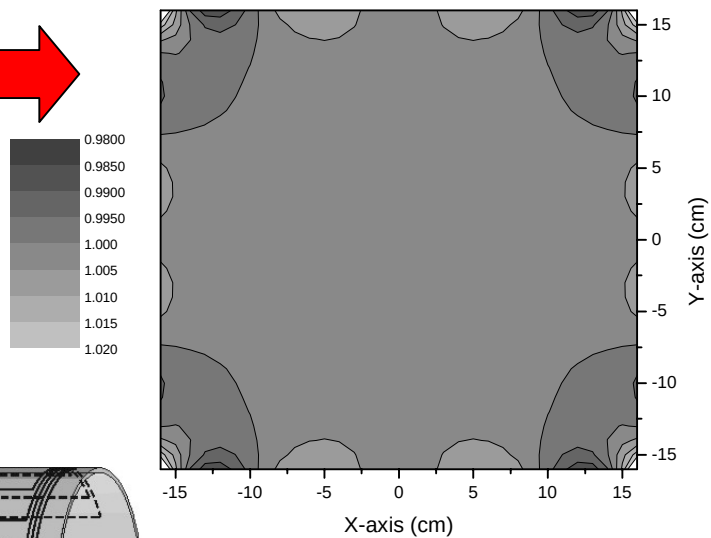

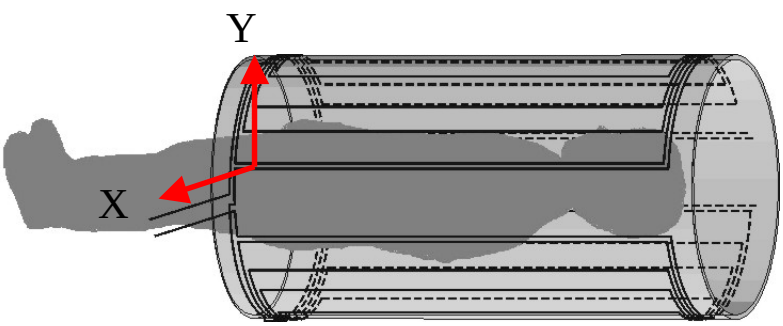

typically ±1% field homogeneity or better

Shielding Currents: closed form

Bidinosti, Kravchuk Cha, David & Hayden
Proc. 12th ISMRM (2004), p. 1551.

elementary current paths constrained to $\rho = a$

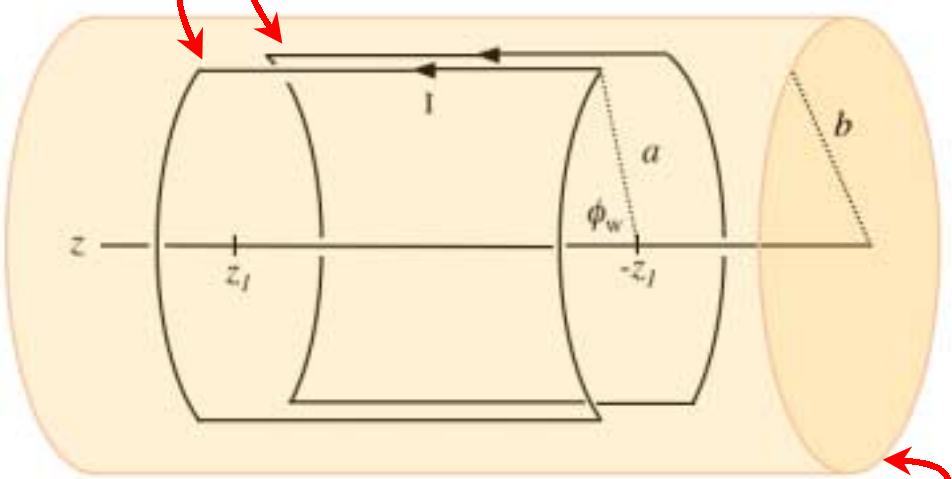

shielding currents constrained to $\rho = b$

B_1 drive currents on $\rho = a$:

$$F_z(\phi, z) = \frac{I}{a}\Big[-\delta(\phi+\phi_w)+\delta(\phi-\phi_w)-\delta(\phi-\pi-\phi_w)+\delta(\phi-\pi+\phi_w)\Big] \times \Big[H(z+z_1)-H(z-z_1)\Big]$$

$$F_\phi(\phi, z) = I\Big[1-H(\phi+\pi-\phi_w)-H(\phi+\phi_w)+H(\phi-\phi_w)+H(\phi-\pi+\phi_w)\Big] \times \Big[-\delta(z-z_1)+\delta(z+z_1)\Big]$$

shielding currents on $\rho = b$:

$$f_z(\phi, z) = -\frac{8Ia}{\pi^2 b^2}\sum_{m=1,3,5\ldots}^{\infty}\sin(m\phi_w)\sin(m\phi)\int_0^\infty \frac{\sin(kz_1)\cos(kz)}{k}\frac{I'_m(ka)}{I'_m(kb)}dk$$

$$f_\phi(\phi, z) = \frac{8Ia}{\pi^2 b}\sum_{m=1,3,5\ldots}^{\infty}\frac{\sin(m\phi_w)\cos(m\phi)}{m}\int_0^\infty \sin(kz_1)\sin(kz)\frac{I'_m(ka)}{I'_m(kb)}dk$$

Example: Passive Shield

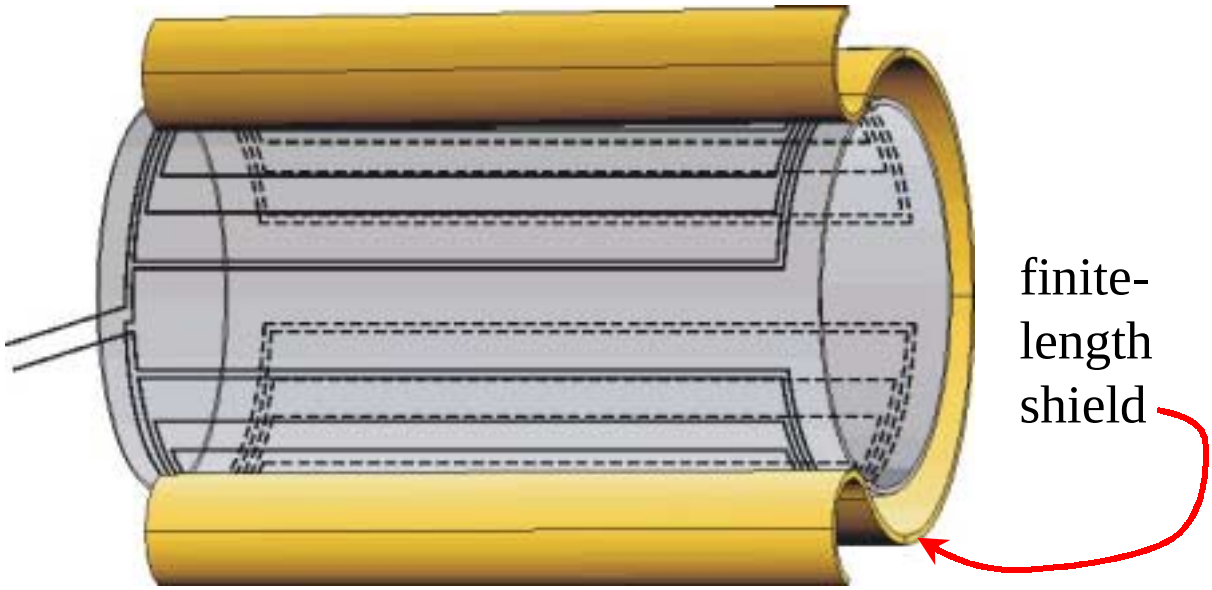

contour plot of surface current (half of shield)

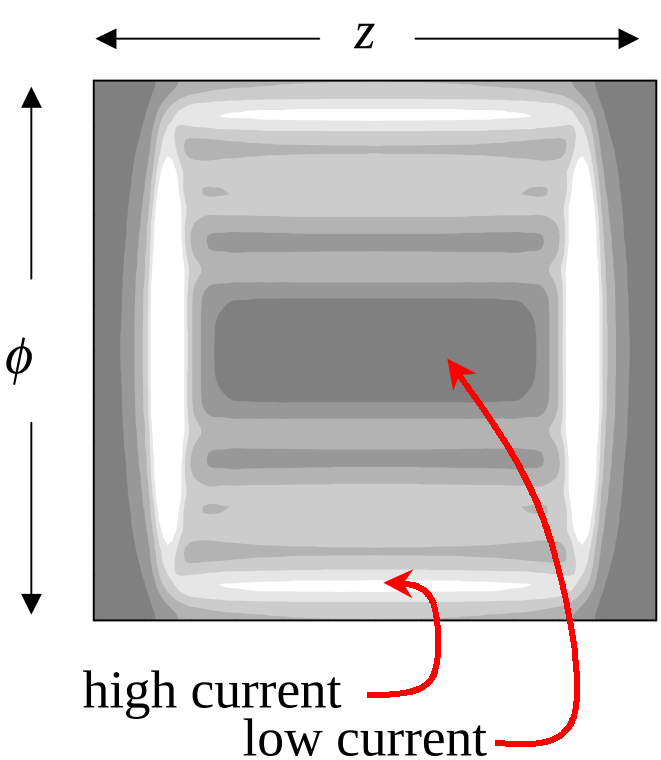

Penetrations (slits) can be made along current streamlines

Example: Active Shield

outer sinθ-like current distribution of relative magnitude $-a^2/b^2$ provides shielding

central field is reduced by a factor of $(1-a^2/b^2)$

a series connection of the two coils is possible if $N_a/N_b=b/a$ (here a/b=4/5, N_a=20, and N_b=16)

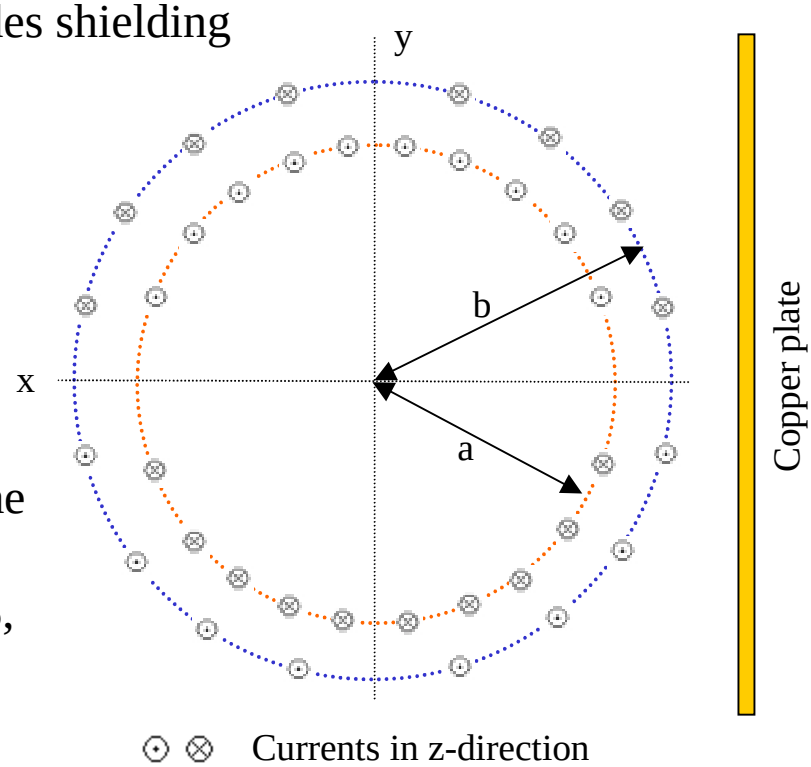

Field distortions produced by image currents induced in a Cu plate are small when the coil is shielded

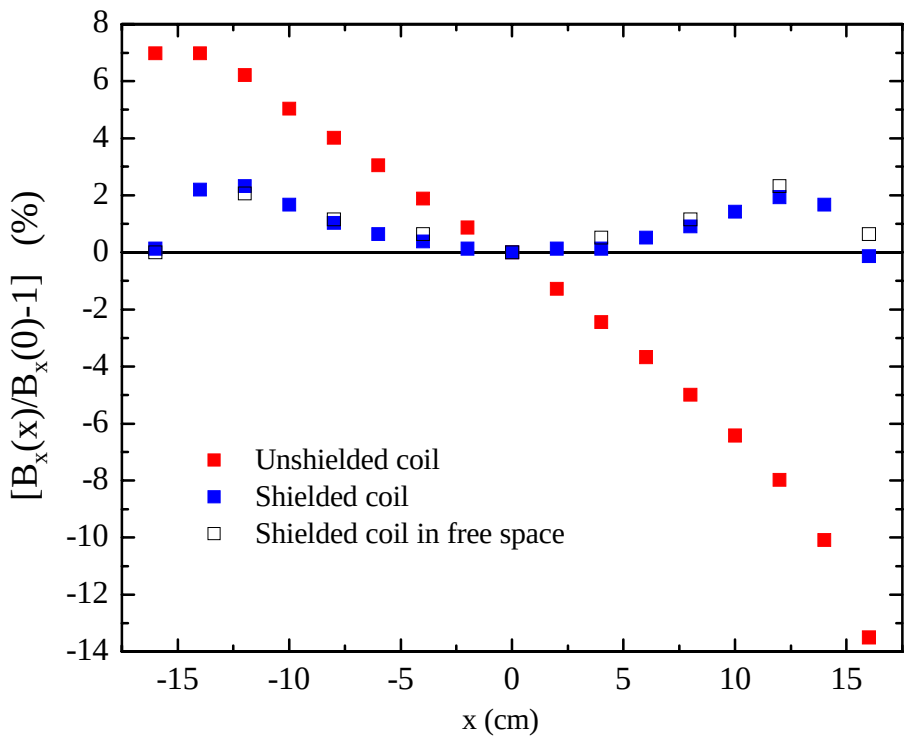

Example: Combined Active & Passive Shielding

- place discrete currents on $\rho = a,b$ and let $N_a/N_b = b/a$
- continuous conducting surface on $\rho = c$

here a:b:c = 4:5:6

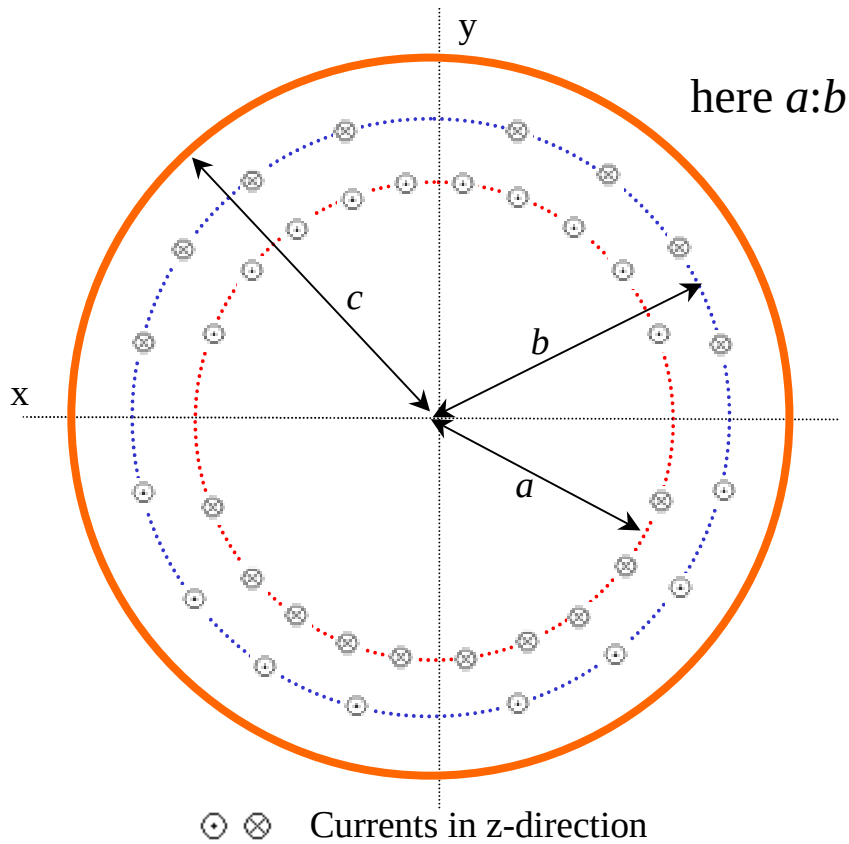

- for simplicity
  - ignore return paths (2D problem)
  - choose angles ϕ_w from current segment approximation of sinθ distribution (*i.e.* no optimization)

$$\phi_1 = \cos^{-1}\left(1 - \frac{2}{N}\right)$$

$$\phi_{i+1} = \cos^{-1}\left(\cos(\phi_i) - \frac{4}{N}\right)$$

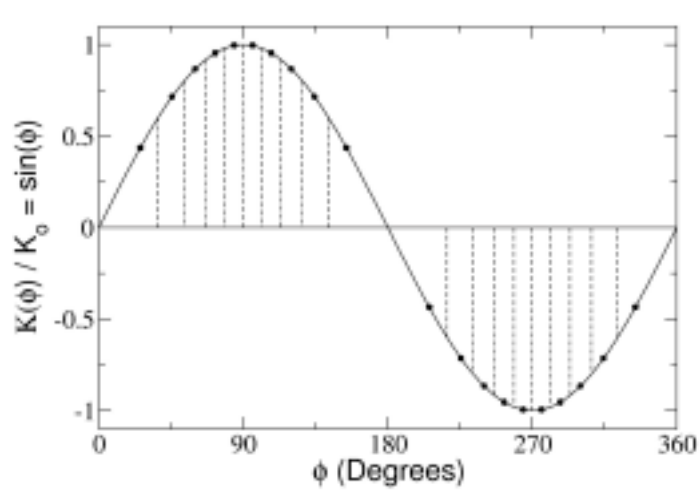

Induced currents on $\rho = c$ tend to cancel

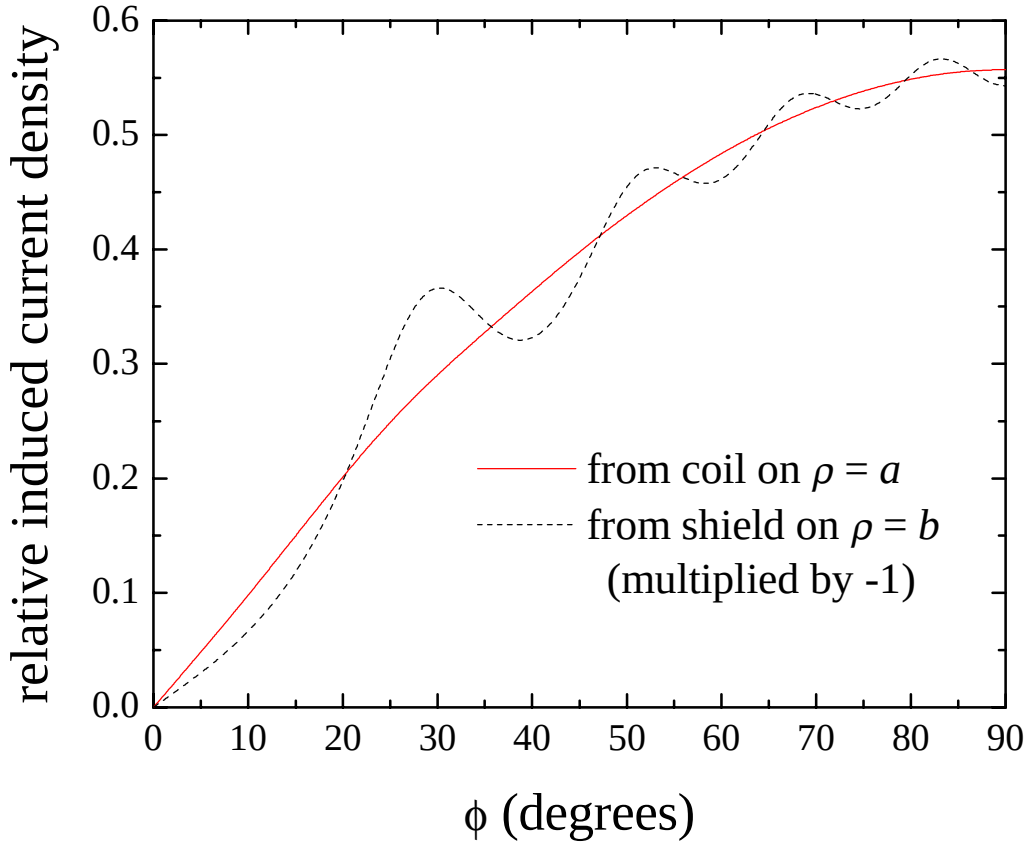

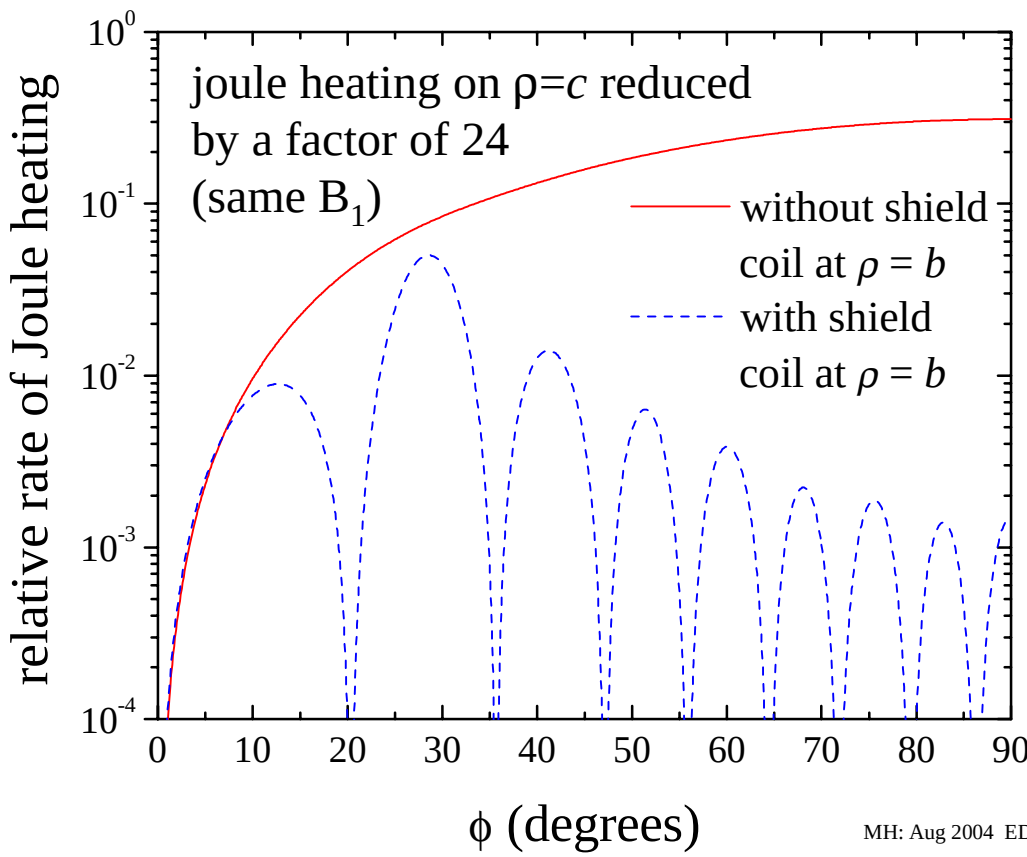

Miscellaneous thoughts

- Significant improvements in homogeneity with increased N
- Further reduce joule heating by using superconducting wires; insert (thermally-heat sunk) normal metal breaks to allow for passage of flux lines
- Full analysis of the restricted diffusion problem in a non-uniform dressing field has yet to be tackled (1 part in 10^3 homogeneity)
- …???