Neutron Guide Update

W. Korsch

Caltech, EDM Collaboration Meeting
February 14, 2007

UK UNIVERSITY OF KENTUCKY

EDM

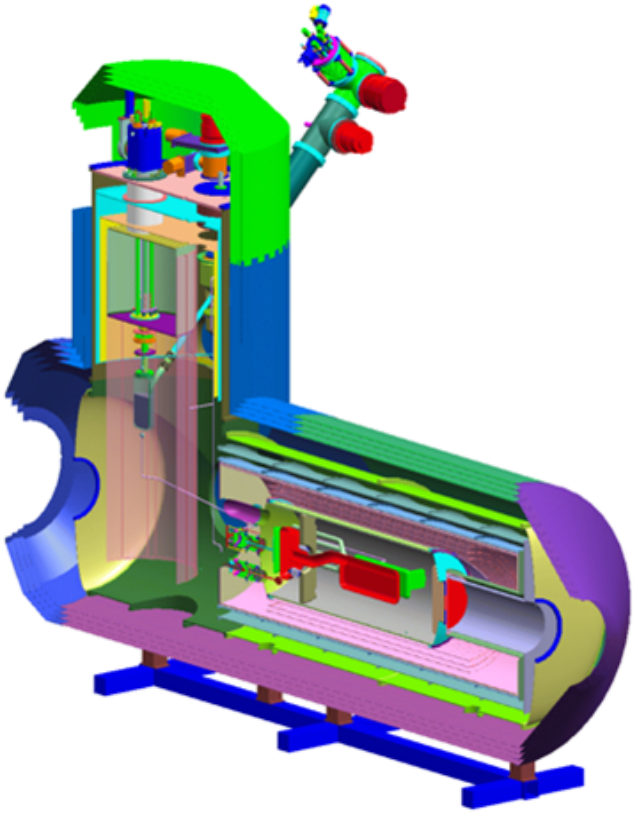

Visit at Swiss Neutronics

Jan 09, 2007: Geoff, Rick, and W. visited Swiss Neutronics

Discussions with Peter Boeni on possible options for polarizer:

- Transmission-Reflection Polarizer interesting idea, but difficult to realize $\Rightarrow$ huge number of Si wafers, alignment, magnetic field, ...
- Preference for a "bender" $\Rightarrow$ compact ,B $\approx$ 50 G in region of polarizer, B = 5 $-$ 10 G downstream $\Rightarrow$ field generated by permanent magnets
- typical dimensions: L = 1.0 - 1.5 m (or shorter) $\Rightarrow$ channel width $\approx$ 4-5 mm
- thickness of glass substrate: 0.55 mm $\rightarrow$ losses
- magnetic coating $Fe_{50}Co_{48}V_2$ $\rightarrow$ Co gets activated (shouldn't be a problem for EDM?)
- downstream coating: non-magnetic (Nickel-Molybdenum)

EDM

Comparison of Different Polarizers

1) Bender (Reflection Polarizer)

- short bender, $\approx$ 1 m length
- total surface area is fixed
- used in many labs

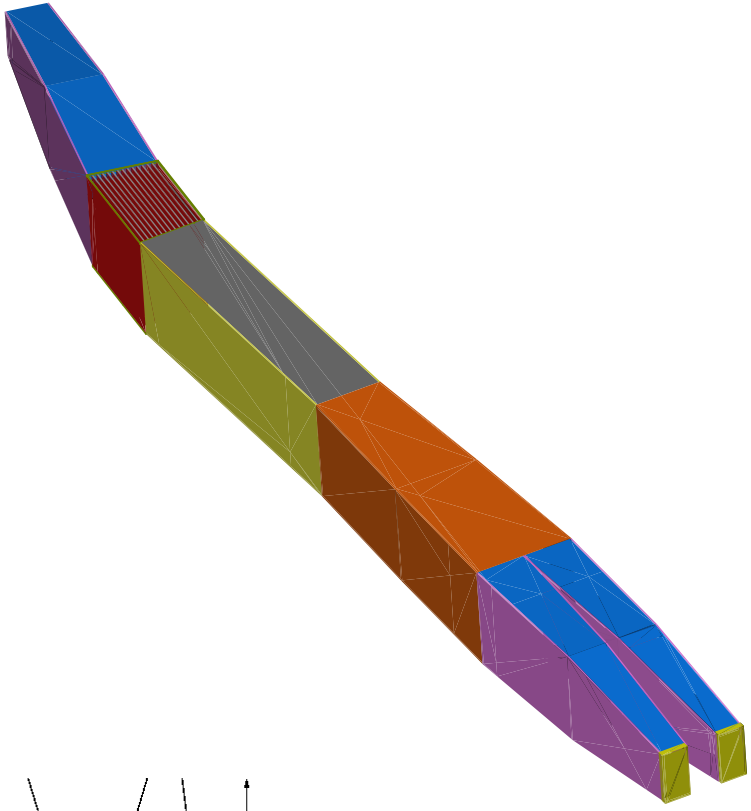

- ☞ Splitter geometry matched to EDM target cells.
- ☞ Cross section: 30 cm $\times$ 30 cm (beginning of splitter).
- ☞ Angles of side walls (splitter) asymmetric.

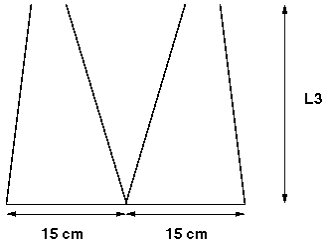

EDM

Comparison of Different Polarizers

2) Transmission Polarizer

- note: orientation of polarizing sheets!!
- length 11 m
- $m_{sheet} = 2.5$, $m_{side\ walls} = 1.2$
- used in other labs

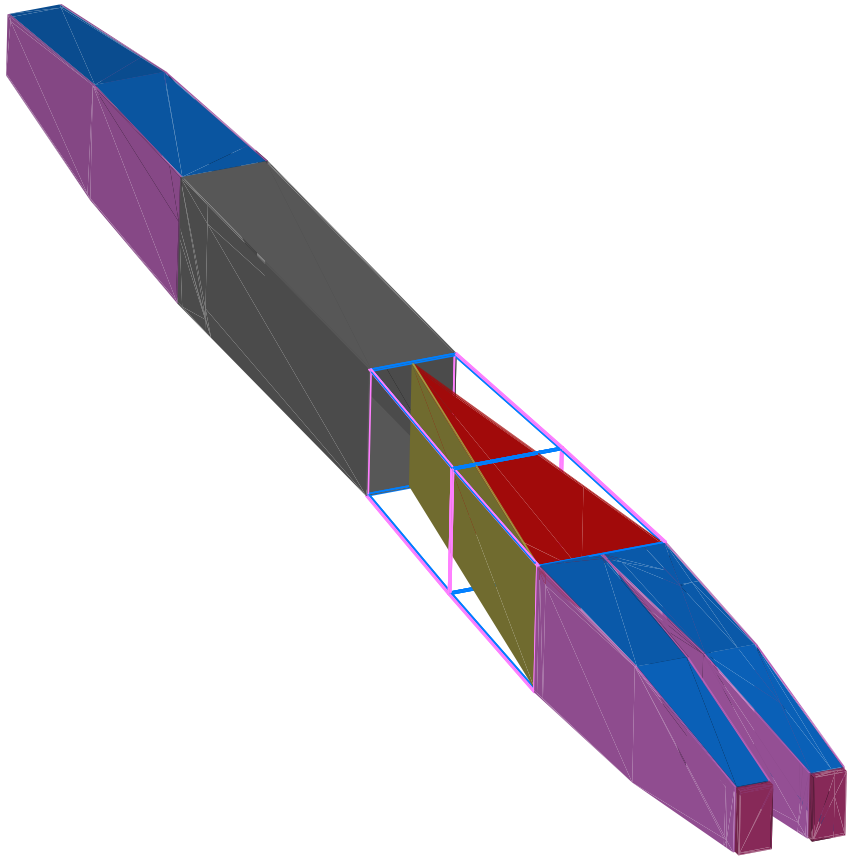

EDM

Comparison of Different Polarizers

3) Transmission-Reflection Polarizer

- length 11 m
- note: orientation of polarizing sheets!!
- new concept

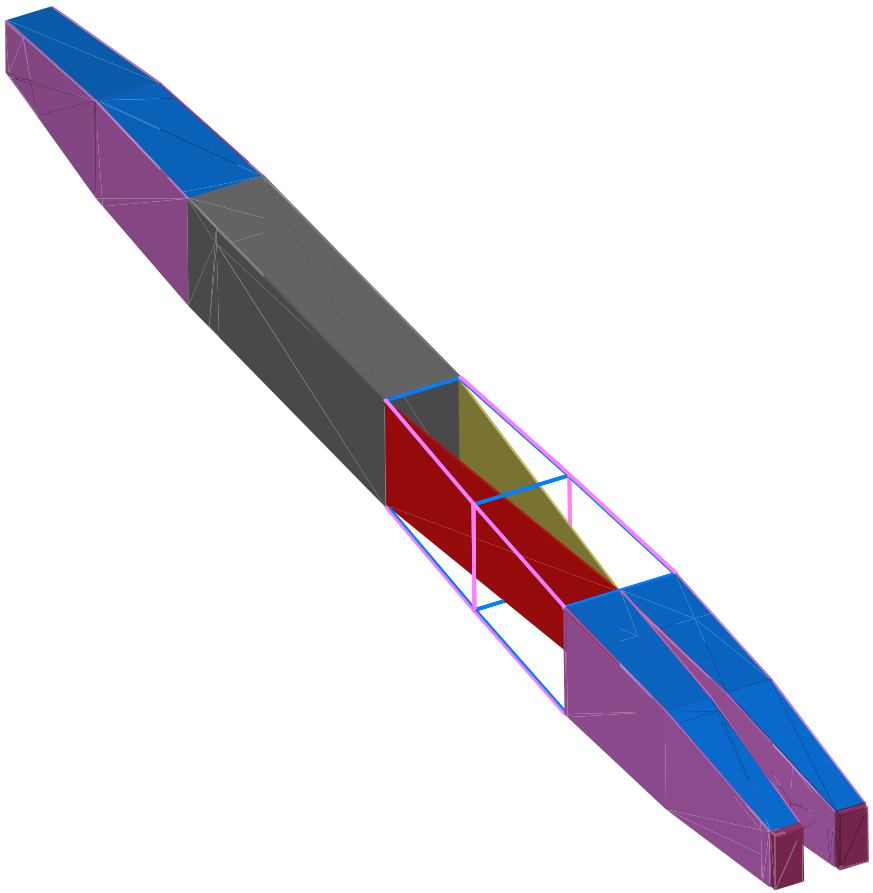

EDM

Komponenten: Polarisation-Cavity

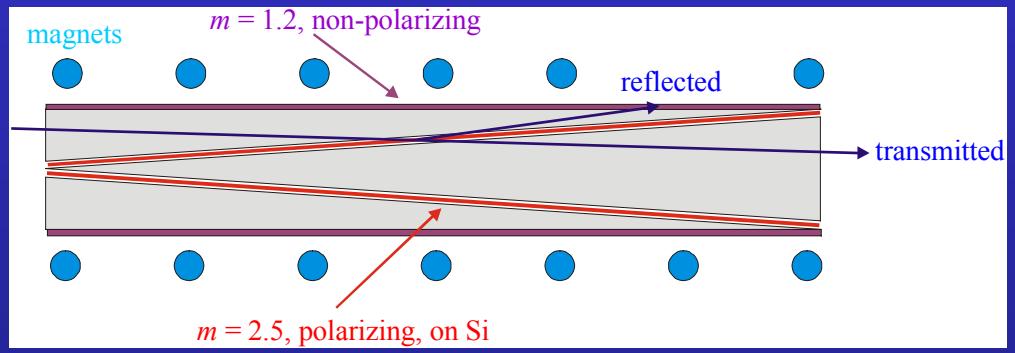

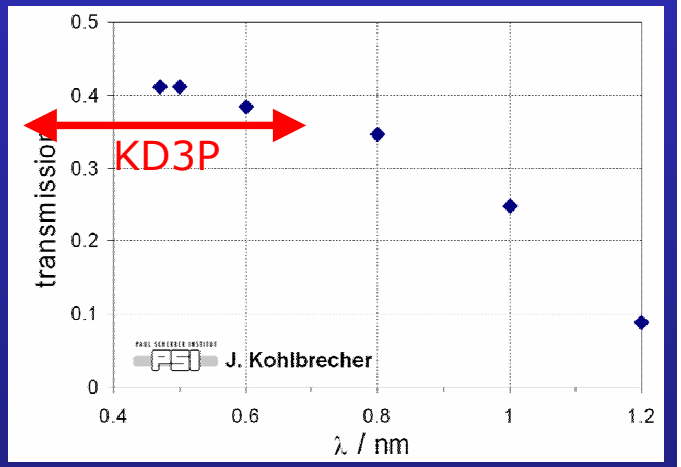

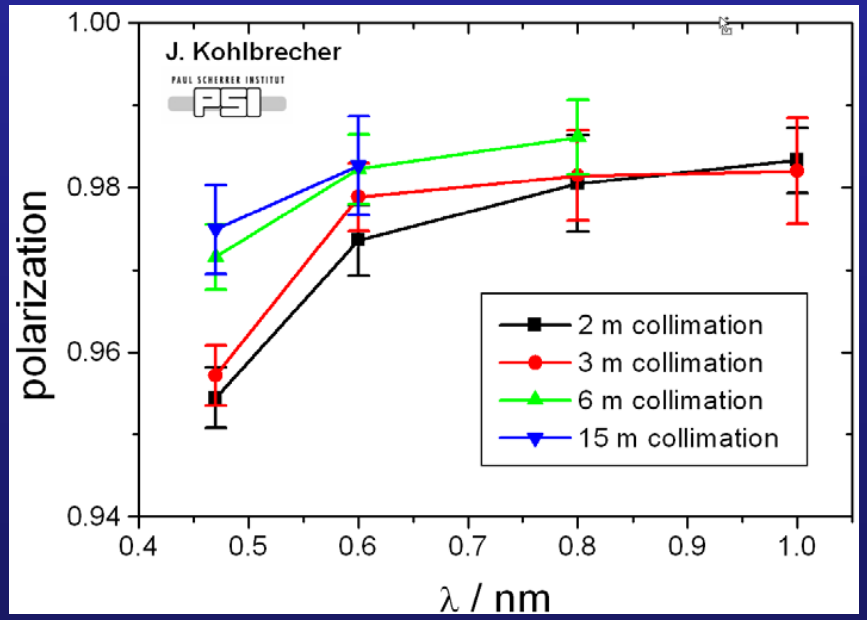

+ high polarization
+ high transmission
+ no deflection of neutron beam
- limited wavelength band

Bender (Reflection Polarizer)

- L = 1 m
- m_{sheet} = 2.5 (front), m_{sheet} = 1.5 (back)
- No-line-of-sight $\Rightarrow$ single bounce optimization
- 50 sheets for 20 cm wide guide $\Rightarrow \Delta = 4$ mm
- bent angle α
- no absorption

n_{sheets}	$\alpha[\circ]$	T_L	T_R	T_{tot}[1]	P_L	P_R	$T_{tot} \cdot \langle P \rangle$
50	0.78	0.138	0.151	0.290	0.99	0.94	0.280
16	2.00	0.163	0.133	0.295	0.98	0.92	0.280

- Note slight left-right asymmetry
- n_{sheets}= 50 $\Rightarrow \approx$ 15 m^2 of m=2.5 coating $\Rightarrow$ \$\$

[1] $T_{tot} = T_L + T_R$

EDM

Overall Comparison

comment	T	$\langle P \rangle$	$T_{tot} \cdot \langle P \rangle$
Bender	0.290	0.96	0.280
Transmission only	0.299	0.93	0.280
Transmission-Reflection	0.544	0.98	0.533

- ☞ no "stopper" at the end of Transmission-Reflection polarizer ($\Rightarrow$ needed for anti-parallel magnetic fields, additional loss: $\frac{width}{30cm}$)
- ☞ $\frac{Transmission-Reflection}{Bender} = 1.90$

EDM

Future

Plan for the near future

- Add finite coefficients of reflectivity for “wrong” spin state (small angles)
- Optimize m values
- Full optimization of $P \times T$ at center of cell $\Rightarrow$ Chris
- Magnetic field simulations to determine size of stopper
- Decision ???

EDM