First Unambiguous Measurement of Jet Fragmentation and Energy Loss in the Quark-Gluon Plasma

Gerd J. Kunde

Camelia Mironov, Ivan Vitev

Abstract

During the evolution of the early universe, about one microsecond after the Big Bang, the universe consisted of mainly free quarks and gluons, commonly referred to a as quark-gluon plasma (QGP). This new form of matter, created under the most extreme of conditions, has since been reproduced in nuclear collisions at the Relativistic Heavy Ion Collider at the Brookhaven National Laboratory. Yet, after several years of research, its properties are still not understood quantitatively, largely due to the limitation of the observables available at RHIC energies. Leading hadrons from jets (collimated spray of hadrons) are the most widely used tool to measure QGP properties, such as energy density and temperature. Analyses of the suppressed production of these hadrons have provided the main evidence that the quark-gluon plasma has indeed been produced. However, this observable has severe inherent limitations. For example, these inclusive measurements do not allow for the determination of the initial jet energy and, consequently, the inferred jet energy loss is ambiguous. This results in a staggering order of magnitude uncertainty in the extraction of QGP properties.

The qualitatively new experimental approach proposed here is the measurement of jets tagged by Z^0s at the Large Hadron Collider (LHC). We will also concurrently develop the supporting perturbative many-body Quantum Chromo-dynamics (QCD) theory. The muon pair resulting from the Z^0 decay does not interact and escapes the collision undisturbed, while the opposite side jet probes the QGP through energy loss and scattering due to the strong nuclear force. The momentum of the muon pair is equal to the original jet momentum, thus allowing for a direct measurement of the initial and final jet energies and an unambiguous identification of the jet's energy loss in the QGP. This breakthrough approach will allow for the first time the reconstruction of the full jet fragmentation function and its in-medium modification. (Fragmentation functions describe the probability of a quark or gluon to produce a given momentum final state hadron.) These new data will severely constrain the current theoretical models of jet energy loss and thus allow for a precise determination of the plasma properties.

The platform of choice for this measurement is the Compact Muon Solenoid experiment (CMS) at the LHC at CERN. The LHC will provide collision energies an order of magnitude above what is currently available at RHIC. Hence, cross sections for jets will become large enough that full jet reconstruction studies will be possible for the first time. We have shown previously that the proposed measurement is experimentally feasible and with the completion of the LHC expected shortly, data taking will begin in 2009. The physics result obtained here will be the first direct measurement of in-medium jet fragmentation and will allow for a precise determination of the plasma properties in a new and unexplored energy regime corresponding to even earlier times in the evolution of our early universe.

I. Research Goals

One of the eleven science questions for the new century, posted by the *National Research Council Committee on Physics of the Universe,* is: 'Are there new states of matter at ultra-high temperatures and densities' (such as the quark-gluon plasma), and what are their properties?' While the plasma has been discovered at RHIC, relatively little is known about its quantitative properties. The next frontier will be the heavy ion experiments at the Large Hadron Collider (LHC) at CERN in Geneva, which will collide lead ions at unprecedented high energies, making many rare but exceptionally precise probes of the plasma accessible for the first time. The DOE commissioned a Nuclear Science Advisory Committee, led by Peter Barnes (LANL) to investigate the impact of U.S. participation in the LHC heavy ion program. The committee strongly endorsed U.S. involvement in experiments at the LHC.

The most direct probe of the plasma is the energy loss of partons (fast quarks or gluons) [1], so far only inferred from hadron measurements interpreted via models [2]. With this motivation, we propose the first *direct* measurement of energy loss via tagging of jets by muon pairs. We outline below that over the past three years we have pioneered the use of this specific channel [3] for probing the QGP at the LHC. Our work is documented in the physics technical design report of CMS [4]. The inclusion in the technical design report ensures that this measurement will be provided immediate CMS resources necessary to collect the data and the computer resources to process it. We therefore propose that LANL continue its lead role and complete the data analysis of energy loss in the QGP. The interpretation of this energy loss in terms of QGP properties requires the parallel development of the theory of radiative and collisional partonic energy loss, which will be provided by the theory portion of this ER.

Particle production in heavy ion collisions occurs via parton-parton interactions. Partons that emerge from the interaction eventually fragment into a number of lower momentum hadrons in a cone around its initial direction. This array of hadrons is called a jet. Fragmentation functions are used to represent the probability that a parton produces a given momentum final state hadron. At LHC energies, jet tagging with muon pairs provides the first opportunity to uniquely associate many individual hadrons with a jet of a given energy, unlike at RHIC where only the leading (fastest) hadron is accessible and the initial jet energy is unknown. Once the fragmentation function for jets produced in proton-proton collisions is determined, we will be able to directly observe for the first time any modification of the fragmentation function due to the presence of the QGP. Fragmentation functions in the vacuum cannot be calculated using perturbative QCD and are extracted via global data analysis. However, their modification due to the presence of the plasma can be calculated and we will concentrate our theoretical effort in this direction.

To summarize, our goal is to lead the acquisition and analysis of the first experimental results on dimuon tagged jets at the LHC in both proton-proton (p+p) and lead-lead (Pb+Pb) collisions. We will use these new data to help advance the state-of-the art theory of jet-plasma interactions and discriminate between models of the quark-gluon plasma (weakly versus strongly coupled). By constraining theoretical models, we will eliminate the currently existing order of magnitude uncertainty in the determination of the QGP density and gain true insight into its properties, such as temperature and Equation of State. Any modification of the shape of the fragmentation function in the QGP, beyond that due to energy loss alone, might be a strong manifestation of fundamentally different non-perturbative physics in the QGP [5] versus the QCD vacuum.

II. Background & Significance

Overview

The four detector groups conducting research at the Relativistic Heavy Ion Collider (RHIC) have announced that a new state of hot, dense matter composed of quarks and gluons was indeed created. However, the state is quite different and even more remarkable than had been predicted. Instead of behaving like a gas of free quarks and gluons, the matter created in heavy ion collisions appears to be more like a *liquid.* This news release was featured in many science magazines around the world. The press release quotes Dr. Raymond L. Orbach, Director of the DOE Office of Science: “The truly stunning finding at RHIC that the new state of matter created in the collisions of gold ions is more like a liquid than a gas gives us a profound insight into the earliest moments of the universe.”

The four discovery papers [6] indicate that some of the observations at RHIC fit within the theoretical mold for a Quark-Gluon Plasma (QGP), the type of matter postulated to have existed just microseconds after the Big Bang. It has been conjectured that the approximate applicability of ideal hydrodynamics to successfully describe a limited part of the experimental data is an indication of the formation of an ideal liquid. Furthermore, phenomenological models of energetic jet absorption have been cited as an indication of an extremely opaque medium. These were based on theoretical extrapolations to RHIC from an energy loss regime relevant to infinite quark and gluon energies and infinitely large plasmas.

However, there are intriguing discrepancies between the experimental data and these early theoretical predictions based on simple models of quark-gluon plasma formation. More recent theoretical developments in many-body QCD theory in the QGP have gone beyond the convenient but *severely violated* assumptions of asymptotic energies and infinite plasma sizes. Both prediction and detailed analysis of the *average suppression* of energetic particle production cross sections, known as jet quenching, suggest that while the novel form of matter created at RHIC is most definitely not a non-interacting parton gas, it is also far away from the strong coupling limit of a liquid. Properties of the quark-gluon plasma, such as its density, inferred via alternative theoretical analyses, differ by a shocking order of magnitude. This difference is dominated by the uncertainty in the theoretical models and not by the uncertainty of the strength of the jet-plasma interaction itself.

It is, therefore, of critical importance to find an experimental probe and observable that can first and foremost distinguish between conflicting theoretical propositions. The principle shortcoming of the experimental measure of leading particle suppression from jet fragmentation is that it is an integral measure that represents the superposition of many unknown quantities. A much more differential observable, such as the in-medium modification of jet-fragmentation, together with precise knowledge of the jet energy, will not only provide the necessary discriminating power to select correct theoretical models but will also be the first breakthrough measurement of its type in collisions with heavy nuclei. Unfortunately, due to the limited energy and cross section for hard probes, such data are not experimentally accessible at RHIC.

The ion-ion center of mass energies at the LHC will exceed that at the RHIC by a factor of nearly 30, providing high rates for hard probes, such as jets, and opening up a window of opportunity for the study of in-medium modification of fragmentation. The most recent schedule for the LHC projects that the accelerator will begin colliding heavy ions starting in 2009.

The Compact Muon Solenoid [7] (CMS) detector is a general-purpose apparatus, developed for high luminosity proton+proton collisions, with an extensive set of large acceptance and high granularity detectors for hadrons, electrons, photons and muons. The unique capabilities of this detector, which is designed to reconstruct of order 20 simultaneous p+p collisions, will make it very suitable for reconstruction of Pb+Pb collisions as well. Its extensive coverage makes it the ideal instrument for dimuon tagging of jets. The central element of CMS is the magnet, which will provide a uniform 4 Tesla magnetic field. The tracking system, the electromagnetic and hadronic calorimeters are positioned inside the magnet, while the muon detector is outside. In addition, data from silicon vertex detectors provide precision vertex determination, tracking of particle trajectories to the outlying detectors, and a high segmentation measurement of the distribution of charged particles. The precision tracking allows furthermore for the measurement of the track displacement with respect to the primary vertex, thus allowing for the discrimination of muons from hadronic decays, which is crucial for suppressing backgrounds.

II.A. Relevance to Laboratory Mission

This ER falls directly under the Laboratory Mission to Enhance the nation's fundamental scientific capabilities. One of the eleven science questions for the new century posted by the National Research Council Committee on Physics of the Universe Report is: Are there new states of matter at ultra-high temperatures and densities (such as the quark-gluon plasma), and what are their properties? This ER will directly address exactly this question. The Peter Barnes report has advocated a DOE Office of Science role in the LHC heavy ion program in addition to the RHIC heavy ion program, clearly recognizing that fundamentally new physics opportunities will be presented at the LHC outside of what can be explored at RHIC. By fostering future participation in the LHC heavy ion program we will ensure a strong heavy ion effort at LANL for years to come. In addition, our P-25 team has had several post-doc and staff members transition from our team to groups working on threat reduction and nuclear safeguards. Clearly, the skills that are developed within our team, including the computing and analysis skills that would be obtained with this ER, are relevant to many mission area jobs within the laboratory, and we have a history of sharing these skills with other groups within the laboratory.

III. R&D Approach

The R&D approach is two-fold, with most of the effort devoted to analyzing experimental data, but one of us (Ivan Vitev) will work on the first derivation on thermal medium corrections to fragmentation functions, identification of the correct models of jet-plasma interactions, and interpretation of the measurements with the goal of pinpointing the plasma properties in a new energy regime.

III.A. Methods

We consider the following Feynman diagrams for the hard scattering of the partons. The dimuons from the Z^0 decay balance the recoiling final state quark or gluon. The quark or the gluon will fragment, producing a jet of hadrons in a cone around the direction of the outgoing parton. In a heavy ion collision, the dimuon and the jet produced in the above process will pass through the plasma. The dimuon will not interact with the medium (no strong coupling), while the jet will lose energy through collisions and radiation in the plasma and thus provide information about the medium. To date, jet studies at RHIC are limited to correlations of leading hadrons, where both the tag and the jet are strongly interacting; the energy loss in this case can only be inferred by using models. **The qualitatively new approach is to have a electromagnetic tag; only then can the energy loss be directly measured.** Our approach is complimentary to using photons for tagging jets, but while those are more abundant, they are experimentally more challenging to reconstruct.

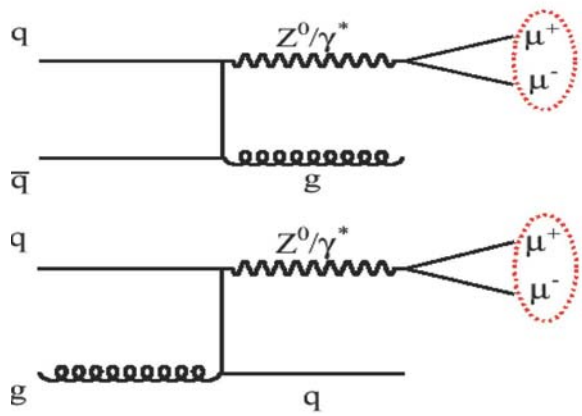

The measurement of jet energy from hadrons alone is nearly impossible in nucleus-nucleus collisions because the very high abundance of hadrons makes it extremely difficult to characterize a jet through jet algorithms (developed for elementary collisions), which typically prescribe energy measurements in some cone around the jet axis. In order to minimize contributions from the large non-jet background, particles emitted beyond the cone or having energies below some threshold are excluded in this jet measurement. This excluded energy, as well as the non-jet background energy, must be estimated and taken into account. Because of the difficulty of making these corrections, Z-tagging of the jet is an exciting new alternative to the jet energy measurement from hadrons alone: the transverse momentum of the Z^0 is equal to that of the high energy parton produced in the collision and therefore allows a precise energy loss measurement and a determination of the momentum fraction of the far side hadrons, i.e. the fragmentation function.

Theoretical Approach

We will investigate two theoretical approaches to in-medium jet modification at the LHC: 1) A non-universal, and consequently non-factorizable, redistribution of the jet fragments due to collisional and radiative processes in the QGP initiated by many-body jet-medium interactions; 2) A universal modification of fragmentation distributions in the presence of a thermalized medium.

The first approach naturally extends the current studies of leading particle suppression [2] but requires detailed new insight into bremsstrahlung processes for much higher jet energies than presently available at RHIC. By solving for the attenuation of the multiplicity of energetic particles (due to energy loss) and the corresponding gain in multiplicity of soft fragments (due to energy redistribution) we will provide theoretical predictions for the anticipated effective fragmentation functions in Pb+Pb collisions at the LHC. Preliminary studies in this direction have already begun and are outlined below.

The second direction that we plan to pursue is the development of a genuinely new theoretical approach to the jet fragmentation problem. The redistribution of the jet energy due to energy loss mechanisms in the plasma can be incorrectly associated with a modification of the non-perturbative fragmentation functions at a fundamental level. We propose to carry out the first evaluation of the universal temperature-dependent corrections to these fragmentation functions in the medium. To perform this task we will employ the technique of lightcone wavefunctions, where hadrons are envisioned as superpositions of multi-quark and -gluon states in the Fock space $| q_1,q_2 \ldots;g_1,g_2\ldots >$ [11]. By replacing the vacuum with a plasma of temperature T we will evaluate the modification to the expectation values of the (anti)quark and gluon matrix elements that enter the definition of the jet fragmentation distributions. Not only will these results be instrumental for subsequent applications in heavy ion phenomenology but they will also provide insight in the physics of popular phenomenological models, such as parton coalescence.

III.B. Preliminary Studies

Opposite sign muon pairs are detected in CMS over a wide range of momenta. Furthermore, the reconstructed mass of the muon pair gives an additional handle on tagging the two leptons of interest in that one observes a clear Z^0 mass peak above the continuum from virtual photons. The correlated charm and bottom decays will contribute to the main source of dimuon backgrounds. There are a few theory papers [8,9,10] that perform 'simple' phenomenological estimates and identify kinematical domains appropriate to RHIC (not enough statistics) and to LHC, where the dilepton tag will have a signal that is bigger than the background. They show that the rapidity acceptance on the order of the CMS experiment is large enough to see both the dilepton pair and the recoiling jet, a prerequisite for our proposed jet study (see below).

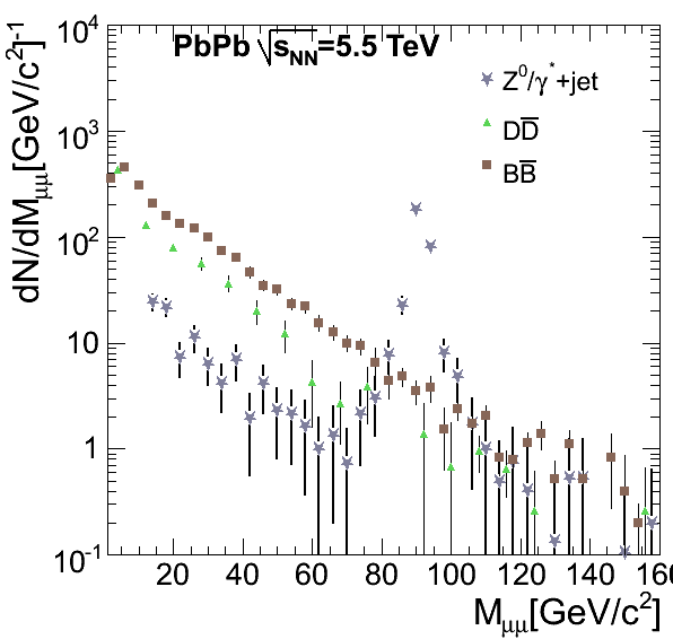

Figure 1. Invariant mass plot of dimuons in CMS for lead-lead collisions at the LHC. The mass peak for the Z^0 boson is clearly above background. The simulation was performed at LANL under ER20060471 and is published in the CMS pTDR [4]. It shows the statistics for average 'year one' luminosity and 1 month of running PbPb at 5.5 TeV.

Based on the arguments above we performed in ER20060471 studies which were published by CMS in the physics Technical Design Report (pTDR) called *High Energy Density QCD with Heavy Ions* [4]. We presented the case study for measuring Z^0-tagged jets via angular

correlations in heavy-ion collisions at the LHC. The signal rates (Z^0+jet) were computed with the PYTHIA event generator. The semi-leptonic decay background from heavy mesons (DD/BB → μμ) was analyzed at NLO order with the MNR code. Kinematical studies have been conducted for both background-dimuons and signal dimuons in search of cuts to increase the signal to background ratio. Figure 1 shows the expected invariant mass distribution for dimuons in the CMS experiment for Pb+Pb collisions at 5.5 TeV at one month at average 'year one' luminosity. The Z^0 mass peak is clearly visible above the background from D and B meson decays. First results indicate that these background rates can additionally be reduced by about a factor of 5 by taking advantage of the superb tracking capabilities of the CMS silicon tracker and its ability to measure track displacement due to secondary decays. Figure 2 shows the expected statistical significance of a fragmentation function measurement for a sample of only 1000 Z^0 tagged jets, less than expected for an average year of heavy ion running. Due to the low average z of the fragmentation functions many particles are produced in the jet so that the error bars are blow 10 percent up the highest data points.

Our preliminary theoretical studies have been focused on providing guidance on the magnitude of the in-medium modification to the distribution of jet fragments as a function of the momentum fraction in order to assess the potential for this discovery measurement at the LHC. These were centered on one of the theoretical possibilities, where the dominant in-medium effect on the jet fragments is their redistribution via the process of quark and gluon energy loss in the medium. As noted before, in such processes the contribution to the experimentally observed shower of hadrons of the leading quark or gluon is suppressed since quarks and gluons undergo radiative and collisional energy loss in the medium. The energy is then redistributed in lower momentum particles since bremsstrahlung proceeds through soft gluon emission.

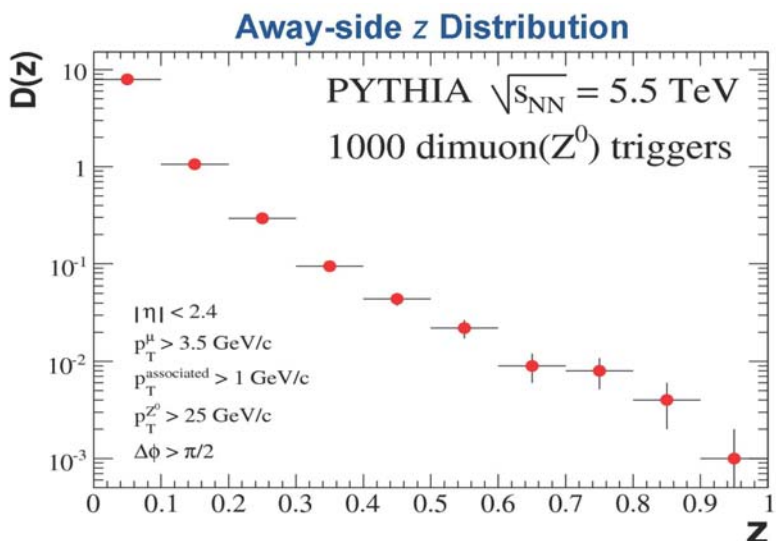

Figure 2. Number of associated charged hadron per trigger dimuon as function of their momentum fraction z (for details see [3,4]). The statistical error bars reflect one month of running at the average design luminosity.

Figure 3 shows a realistic estimate of the experimentally observable effect on the fragmentation function at the LHC for initial plasma temperatures in excess of T = 800 MeV (9.3×10^{12} K) that expand relativistically and cool down to form particles in a process similar to the expansion of the early universe. Quarks and gluons undergo significantly different in-medium modification of the fragmentation functions owing to their different color charge. Nevertheless, over large parts of phase space, the predicted QGP effects are a factor of 4 to 10 suppression, see insert of Figure 3. With the expected statistical precision of the proposed discovery measurement at the LHC, see Figure 2, qualitative advances in pinpointing the correct model of jet propagation in

the plasma will be made. Consequently, the uncertainty in the extraction of the plasma properties in the new and exciting energy regime provided by the LHC will be reduced by a factor of 5!

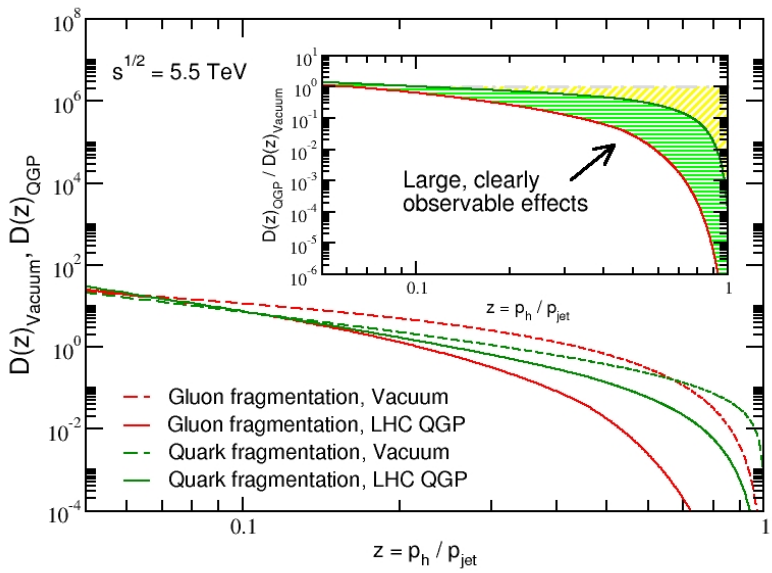

Figure 3. Anticipated modification in the number of hadrons associated with a Z^0-triggered jet at the Z^0 mass = 91.2 GeV as a function of the hadron momentum fraction z = p_h/p_{jet}. Dashed lines represent vacuum fragmentation and solid lines represent QGP-modified fragmentation for the expected LHC densities of the new state of matter. Both quark and gluon jets are shown. The insert demonstrates that the experimentally observable effect is more than a factor of 10 suppression for gluons and more than a factor of 4 for quarks over large parts of the experimentally accessible phase space (z) and accurately measurable with our expected statistics.

III.C. Expected results

The measurement of the baseline (no medium) from p+p collisions will provide the first ever fragmentation functions for partons scattering at the highest available energies at the LHC, -- clearly a publishable step. We expect that our results will provide valuable data for global perturbative QCD analysis of fragmentation functions at the LHC. After the Pb+Pb collision rate approaches the design luminosity, we wil take data and perform the analysis to extract the medium modifications due to the plasma. With the help of pQCD calculations, we will complete a measurement of the plasma opacity. The accelerator time line, luminosities and number of Z^0 tagged events are as follows (transverse momentum of Z^0 >GeV/c):

Year	p+p luminosity	Pb+Pb luminosity	# of Z^0+jet in p+p	# of Z^0+jet in Pb+Pb
2009	$1*10^{31}$	$5*10^{25}$	2000	~150
2010	$5*10^{32}$	$5*10^{26}$	100k	~1500
2011	$2*10^{33}$	$1*10^{27}$	400k	~3000

The theoretical effort is expected to result in the first calculation of the universal in-medium modification of the jet fragmentation function. Through comparison to the experimental data we anticipate to be able to distinguish this theoretical scenario from simple kinematic redistribution of the jet fragments. These results can then be used to determine the opacity of the quark-gluon plasma at the LHC energies.

III.D. Schedule & Milestones

2009 Data taking of p+p and Pb+Pb data, preparation of analysis tools, calibrations. Derivation of genuine in-medium modification of jet fragmentation functions

2010 First analysis, collaboration approval, publication of p+p results, high luminosity Pb+Pb data taking. Theoretical simulations of the dilepton-tagged jet fragment distribution

2011 Final Pb+Pb experimental and theoretical analysis, collaboration approval, and publication of results on plasma opacities

IV. Program Development Plan

This project will be a stepping stone for part of the PHENIX team to join the U.S. CMS heavy ion effort. The DOE Office of Science, Nuclear Physics program is allowing participation in the LHC program under DOE funding, but is being very selective in how many institutions and which people are allowed to join under DOE funding because of the substantial CERN collaboration fees (one-time fee of $150k plus yearly fees per individual). By establishing ourselves as leaders in the CMS heavy ion analysis group through an ER effort, we believe we will be able to leverage support from DOE to transition to an effort that is supported entirely under DOE funds. It is critical for LANL to establish a path for participation in the LHC heavy ion program if we are to keep our heavy ion physics efforts at LANL healthy as new physics opportunities will naturally transition over the years from RHIC to LHC. In addition to allowing a transition to DOE-funded efforts at the LHC, this ER will allow us to develop experimental analysis tools and theoretical techniques which can be used in our RHIC efforts and adapted to other types of hot and dense plasmas. For heavy ion theory, the successful completion of this project will help maintain the DOE Office of Science support. Should new heavy ion theorists join, we plan to explore the possibility of securing additional external funding. Bill Louis, the program manager for LANL DOE nuclear physics, is well aware of the LHC program and supports this new endeavor.

V. Qualifications of the Research Team & Financial Justification

The work will be performed in collaboration with a post-doctoral fellow, Camelia Mironov, who is currently at LANL. Camelia has performed the majority of the simulation work for our prior publications, is one of the editors or the 'CMS physics technical design report: Addendum on high density QCD with heavy ions', and is a recognized young leader in the CMS heavy ion collaboration. The theory support will be provided by Ivan Vitev, the leading theorist in the field of partonic energy loss. Ivan Vitev has created the technique of jet tomography – a new and now widely adopted method of studying plasmas with energetic particles. His work has been indispensable in the attempts to characterize the properties of the strongly-interacting matter at RHIC. The whole project will be lead and coordinated by Gerd J. Kunde, who has been working in the field of heavy ion collisions for about 20 years, as evidenced by his having more than 130 refereed publications and approximately 7500 citations. His vast experience in simulation, data taking and analysis is reflected in his position as a Co-convener of the high-p_T working group at STAR, prior to joining the PHENIX collaboration. With its expertise, the proposed team is ideally suited to address the challenges presented by the first ever direct measurement and interpretation of the quark-gluon plasma opacity at the LHC.

The CMS center for the U.S. is located at Fermi National Accelerator Lab at Chicago; the experiment itself is near Geneva, Switzerland. The M&S reflects the need for international travel monies and computer support for the duration of the project.

VI. Cited Literature

1) Vitev, I. "Non-abelan energy loss in cold nuclear matter", Phys. Rev. C **75**, 064906 (2007); Gyulassy, M., Levai, P., Vitev I., "Reaction operator approach to non-Abelian energy loss", Nucl. Phys. B **594**, 371-419 (2001)
2) Vitev, I., "Testing the mechanism of QGP-induced energy loss", Phys. Lett. B **639**, 38-45 (2006) ; Vitev, I., Gyulassy, M., "High pT tomography of d+Au and Au+Au at SPS, RHIC and LHC", Phys. Rev. Lett. **89**, 252301 (2002)
3) Mironov, C., Constantin, P., Kunde, G.J., "Dilepton tagged jets", Eur. Phys. J. C **49**, 19–22 (2007)
4) CMS: "High Energy Density QCD with Heavy Ions", J. Phys. G: Nucl. Part. Phys. **34**, 2307-2455 (2007)
5) Policastro, G., Son, D.T., Starinets, A.O., "The shear viscosity of strongly coupled N=4 supersymmetric Yang-Mills plasma", Phys. Rev. Lett. **87**, 081601 (2001)
5) Arsene, I., et al., "Quark Gluon Plasma an Color Glass Condensate at RHIC? The perspective from the BRAHMS experiment", Nucl. Phys. A **757**, 1-27 (2005); Back, B., et al., "The PHOBOS perspective on discoveries at RHIC", Nucl. Phys. A **757**, 28-101 (2005); Adams, J., et al., "Experimental and theoretical challenges in the search for the Quark Gluon Plasma: The STAR Collaboration's critical assessment of the evidence from RHIC collisions", Nucl. Phys. A **757**, 102-183 (2005); Adcox, K., et al., "Formation of dense partonic matter in relativistic nucleus-nucleus collisions at RHIC: Experimental evaluation by the PHENIX collaboration", Nucl. Phys. A **757**, 184-283 (2005)
7) Web info: http://cmsinfo.cern.ch/Welcome.html
8) Wang, X.N., Hwang, Z., Sarcevic, I., "Jet quanching in the opposte direction of a tagged photon in high energy heavy ion collisione", Phys. Rev. Lett**. 77**, 231-234 (1996)
9) Srivastava, D.K., Gale, C., Awes, T.C., "Dilepton-tagged jets in nucleus-nucleus collisione: a case study", Phys. Rev. C 67, 054904 (2003)
10) Lokhtin, I.P., Sherstnev, A.V., Snigirev, A.M., "P_T imbalance of dimuon+jet production as a signal of partonic energy loss in heavy ion collisions at the LHC", Phys. Lett. B **599**, 260-268 (2004)
11) Brodsky, S.J., Hwang, D.S., Ma, B.Q., Schmidt, I., "Light cone representation of the spin and orbital angular momentum of relativistic composite systems", Nucl. Phys. B **593**, 311-335 (2001); Adil, A., Vitev, I., "Collisional dissociation of heavy mesons in dense QCD matter", Phys. Lett. B **649**, 139-146 (2007)

VII. CV's for PI and key investigators

Name Gerd J. Kunde
Date of Birth May 4th, 1964
Place of Birth Frankenthal, Germany
Citizenship German, permanent resident

Degrees Awarded

April 1994 Ph.D. Physics, University Frankfurt
May 1990 Diplom Physics, University Heidelberg
May 1986 Vordiplom Physics, University Heidelberg
May 1983 Abitur Albert-Einstein-Gymnasium, Frankenthal

Experience

Oct 2005 - Present
PI of ER20060471 'A New Probe for the Quark Gluon Plasma'
May 2005- Present
Adjunct Professor for Physics at University of Illinois at Chicago
Dec. 2002 - Present
Technical Staff Member at Los Alamos National Laboratory
Dec. 2002 - Present
Member of the PHENIX collaboration at the Relativistic Heavy Ion Collider at Brookhaven National Laboratory (BNL)
Sept. 1998 - Dec. 2002
Spokesperson for the international STAR-RICH (Ring Imaging Cherenkov Detector) Collaboration, Project Leader 99 & Systems Manager '00-'02
July 1997 – Dec. 2002
Member of the STAR collaboration at the Relativistic Heavy Ion Collider at BNL
April 2001 - Dec. 2002
Co-convener of the High-Transverse Momentum Physics Working Group in STAR
June 1997 - Dec. 2002
Assistant Professor, Physics Department, Yale University, New Haven CT
Oct. 1996 - June 1997
Research Associate, National Superconducting Cyclotron Laboratory, Michigan State University, E. Lansing
April 1994 - Sept. 1996
Feodor-Lynen Fellow of the *Alexander-von-Humboldt Foundation*
Visiting Research Associate, National Superconducting Cyclotron Laboratory, Michigan State University, E. Lansing
May 1990 - April 1994
Research Assistant at Gesellschaft f¨ur Schwerionenforschung (GSI), Darmstadt
April 1988 - May 1990
Undergraduate Student at GSI /Teaching Assistant University Heidelberg
August-Oct. 1986
Student Program at Gesellschaft f¨ur Schwerionenforschung (GSI), Darmstadt

Fellowships

April 1994-September 1996
Feodor-Lynen Fellow of the *Alexander-von-Humboldt Foundation*

Publications in Refereed Journals as of January 2008

>135 total >50 Phys.Rev.Lett., >10 Phys.Lett. B, >30 Phys.Rev. C, etc.
~7300 citations 20 very-well-known papers (>100 citations)

Community Service

Project reviewer US Department of Energy Referee for Phys. Rev. Lett, Phys. Lett. B, Nuclear Inst. Methods

---

Name Camelia M. Mironov
Date of Birth October 25th, 1977
Place of Birth Galati, Romania
Citizenship Romanian

Degrees Awarded

October 2005 Ph.D. Physics, Kent State University
June 2001 B.S. Physics, University of Bucharest, Romania

Experience

Dec. 2005 - Present
Researcher on ER20060471 'A New Probe for the Quark Gluon Plasma'
Dec. 2005 - Present
Postdoctoral Research Scientist at Los Alamos National Laboratory
Dec. 2002 – Nov. 2005
Active member of the STAR collaboration at the Relativistic Heavy Ion Collider at Brookhaven National Laboratory (BNL)
Aug. 2001 - Nov 2005
Research Assistant/Graduate Student at Kent State University, Ohio
Oct. 1996 - June 2001
Undergraduate Student at University of Bucharest, Romania

Fellowships

2004-2005 *Kent State University Fellowship*

Referee Service

2004-present Journal of Physics G

Publications in Refereed Journals as of January 2008

67 total >20 Phys.Rev.Lett., 5 Phys.Lett. B, >20 Phys.Rev. Cetc.
>3300 citations 5 very-well-known papers (>100 citations)

Name Ivan M. Vitev
Date of Birth March 9, 1971
Place of Birth Sofia, Bulgaria
Citizenship Bulgarian

Degrees Awarded

October	2002	Ph.D.	Physics, Columbia University, New York
October	2000	M.Phil.	Physics, Columbia University, New York
October	1999	M.A.	Physics, Columbia University, New York
November	1995	M.S.	Physics, Sofia University, Sofia, Bulgaria
November	1995	M.S.	Physics Education, Sofia University, Sofia, Bulgaria
July	1993	B.S.	Physics, Sofia University, Sofia, Bulgaria

Experience

October 2007 - Present
PI of ER20080201 'The First Precise Determination of Quark Energy Loss in Nuclei'

July 2006 - Present
Co-PI of DR20060049 'Heavy Quarks as a Probe of a New State of Matter'

July 2007- Present
Technical Staff Member at Los Alamos National Laboratory

July 2004 – July 2007
J. Robert Oppenheimer Fellow at Los Alamos National Laboratory

September 2002 – July 2004
Research Associate at Iowa State University

September 1998 - September 2002
Research Assistant / Graduate Student at Columbia University, New York

September 1997 – September 1998
Teaching Assistant / Graduate Student at Columbia University, New York

October 1990 - October 1995
Undergraduate Student at Sofia University, Sofia, Bulgaria

Fellowships

July 2004-July 2007
J. Robert Oppenheimer Fellow of the *Los Alamos National Laboratory*

Publications in Refereed Journals as of March 2008

54 total	4 Phys. Rev. Lett., 10 Phys. Lett. B, etc.	
~ 2300 citations	1 famous paper	(>250 citations)
	5 very well-known papers	(>100 citations)
	8 well-known papers	(>50 citations)
Presented	> 100 invited and contributed lectures, colloquia, talks and seminars	

Community Service

Project reviewer	US Department of Energy
Referee for	Phys. Rev. Lett, Phys. Lett. B, Nucl. Phys. A, Phys. Rev. C, J. Phys. G, Eur. Phys. J. C, Eur. Phys. J. A, Mod. Phys. Lett. A, Acta Phys. Hungarica