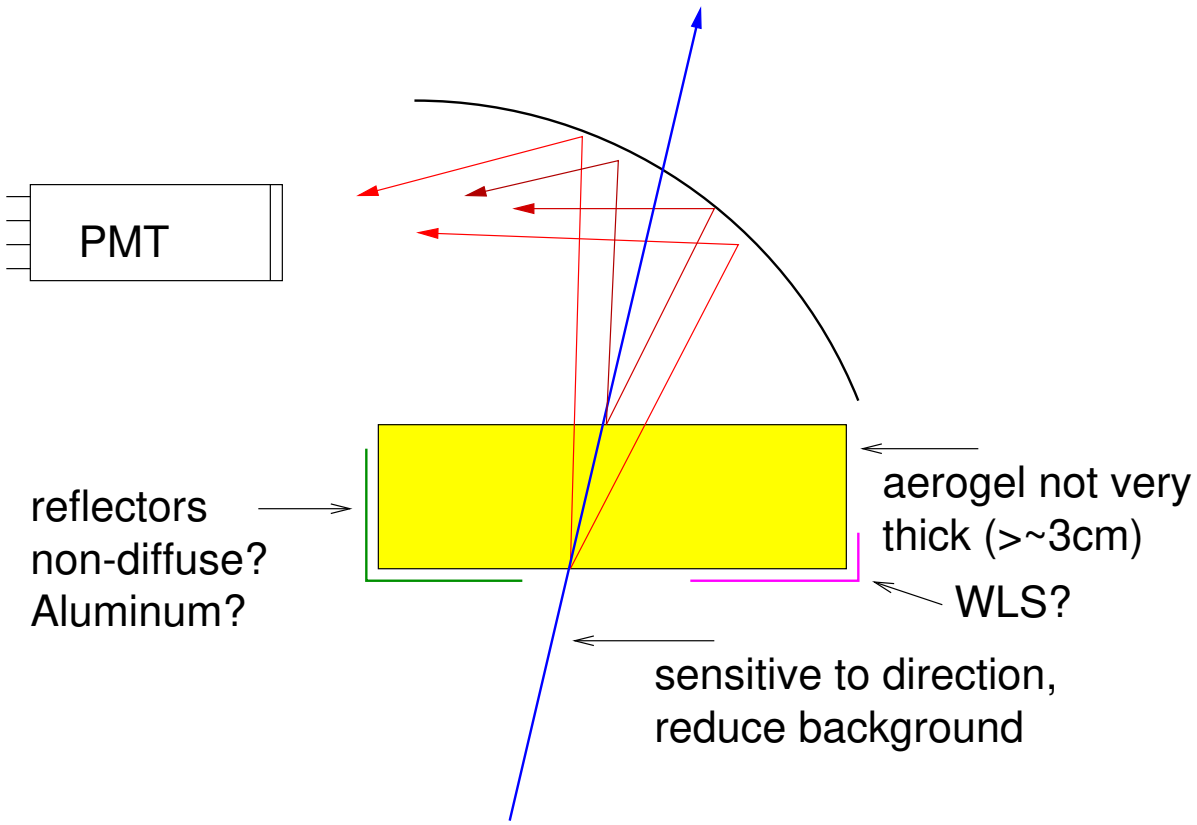
PMT
reflectors
non-diffuse?
Aluminum?
aerogel not very
thick (>~3cm)
WLS?
sensitive to direction,
reduce background