PHENIX

MUON SOUTH ARM HIGH VOLTAGE DISTRIBUTION SYSTEM

The purpose of this report is to fully document the as-built and installed South Arm HV Distribution System. This is the predecessor of the North Arm System. Technical drawings, schematics and data sheets for all components used are included.

Gregory W Hart

Los Alamos National Laboratory, P-25

23 July 2001

Table of Contents

Cover Page		Page 1
Table of Contents		Pages 2, 3
Overview		Pages 4, 5
Technical Details		Page 5
HV Coax Cable (Distribution Box to Power Supply Filter-Plug box/)		
Assembly Drawing	23 June 2000	Page 6
St 1 S Cable Length & Label	23 June 2000	Pages 7-9
St 2 S Cable Length & Label	23 June 2000	Pages 10, 11
St 3 S Cable Length & Label	19 Sept. 2000	Page 12
LeCroy HV Plug/Filter Box		
Schematic	5 April 2000	Page 13
PCB Layer 1	21 April 2000	Page 14
PCB Layer 2	21 April 2000	Page 15
PCB Fabrication Drawing	9 April 2000	Page 16
Box Fabrication Drawing	9 April 2000	Page 17
PCB Assembly Drawing	9 April 2000	Page 18
Assembly Drawing Cables-Box	7 April 2000	Page 19
Distribution Boxes, Mechanical details		
St 1, Board Assembly Drawing	12 June 2000	Page 20
St 1, Gaps 1 & 2 Box Assembly	12 June 2000	Page 21
St 1, Gaps 2 & 3 Box Assembly	26 June 2000	Page 22
St 1, Box Fabrication	21 April 2000	Page 23
St 2, Board Assembly Drawing	26 June 2000	Page 24
St 2, Box Assembly	21 April 2000	Page 25
St 2, Box Fabrication	26 June 2000	Page 26
St 3, Board Assembly Drawing	26 June 2000	Page 27
St 3, Box Assembly	31 May 2000	Page 28
St 3, Box Fabrication	26 June 2000	Page 29
Distribution Boxes, Schematics		
St 1, Octant 1, Gaps 1-2	16 Nov 2000	Page 30
St 1, Octant 1, Gaps 2-3	16 Nov 2000	Page 31
St 1, Octant 2, Gaps 1-2	16 Nov 2000	Page 32
St 1, Octant 2, Gaps 2-3	16 Nov 2000	Page 33
St 1, Octant 3, Gaps 1-2	16 Nov 2000	Page 34
St 1, Octant 3, Gaps 2-3	16 Nov 2000	Page 35
St 1, Octant 4, Gaps 1-2	16 Nov 2000	Page 36
St 1, Octant 4, Gaps 2-3	16 Nov 2000	Page 37

Distribution Boxes, Schematics (continued)

St 1, Octant 5 Gaps 1-2	16 Nov 2000	Page 38
St 1, Octant 5, Gaps 2-3	16 Nov 2000	Page 39
St 1, Octant 6, Gaps 1-2	16 Nov 2000	Page 40
St 1, Octant 6, Gaps 2-3	16 Nov 2000	Page 41
St 1, Octant 7, Gaps 1-2	16 Nov 2000	Page 42
St 1, Octant 7, Gaps 2-3	16 Nov 2000	Page 43
St 1, Octant 8, Gaps 1-2	16 Nov 2000	Page 44
St 1, Octant 8, Gaps 2-3	16 Nov 2000	Page 45
St 2, Octant 1	16 Nov 2000	Page 46
St 2, Octant 2	16 Nov 2000	Page 47
St 2, Octant 3	16 Nov 2000	Page 48
St 2, Octant 4	16 Nov 2000	Page 49
St 2, Octant 5	16 Nov 2000	Page 50
St 2, Octant 6	16 Nov 2000	Page 51
St 2, Octant 7	16 Nov 2000	Page 52
St 2, Octant 8	16 Nov 2000	Page 53
St 3, Octant 1	16 Nov 2000	Page 54
St 3, Octant 2	16 Nov 2000	Page 55
St 3, Octant 3	16 Nov 2000	Page 56
St 3, Octant 4	16 Nov 2000	Page 57
St 3, Octant 5	16 Nov 2000	Page 58
St 3, Octant 6	16 Nov 2000	Page 59
St 3, Octant 7	16 Nov 2000	Page 60
St 3, Octant 8	16 Nov 2000	Page 61

South Arm HV Distribution System, Schematics

St 1, Sheet 1 (Oct 1, 2, 3 & 4)	18 April 2000	Page 62
St 1, Sheet 2 (Oct 5, 6, 7 & 8)	18 April 2000	Page 63
St 2, Sheet 1	15 June 2000	Page 64
St 3, Sheet 1	15 June 2000	Page 65
South Arm Grounding Schematic	4 April 2001	Page 66

Specification / Data sheets 23 July 2001 Page 67
(www link addresses)

Overview:

The purpose of the High Voltage Distribution System (HVDS) is to supply ~1800 volts DC to each of the MUON tacking chambers. There are three sets of chambers for the South Arm, Station 1, 2 and 3. Each set of chambers consists of a sandwiched assembly of cathode plane, anode plane, and cathode plane. At the present time, only the cathode planes are to be read-out. Each plane has eight sections, called octants. The HVDS is used to supply the DC voltage to the anode planes only.

Every anode plane octant has a set of printed circuit boards (PCB's), which provide the interface between the anode and field wires inside the gas volume to the signal output connectors, high voltage connections, and test/calibration inputs (for the last few wires furthest from the vertex of the detector).

All cards, except the one furthest from the vertex, have pads for 32 anode and 32 field wires. There is a single HV filter capacitor (3200 pF), on each card to decouple any noise that may be picked-up externally to the wires inside the chamber. A single, unshielded, twisted pair wire is soldered directly to each PCB. One wire is rated for HV, the other is connected directly to the metal frame of the chamber, and the ground planes of the PCB.

The twisted pair wires are connected to the outputs of the HVDS. The inputs to the HVDS are from the HV power supply that is located at some distance from the chambers. The power supply is a VISyn Series Modular High Voltage System currently manufactured by Universal Voltronics,
http://www.voltronics.com/products/VISyN_overview.html.
The output connectors of the power supply are eight channel LeCroy High Voltage (LHV) plastic sockets, manufactured by AMP for LeCroy Research Corp.

A plastic utility box is mounted near the chambers. Inside the box is a circuit card(s) with screw terminals and bleeder resistors. The twisted wires enter the box on one side through a conduit coupler. The HV inputs to the box are a bundle of red coaxial cables (RG-59) that enter the box through a larger conduit coupler on the adjacent side of the box. At the HV Power Supply (HVPS), each bundle of eight coax cables are soldered to a PCB mounted inside a small plastic box. This PCB contains a filter network. The opposite side of this box holds the mating AMP LHV Plug connector. These connectors are referred to by some as "Blue Meanies".

During installation and subsequent troubleshooting, it became obvious that this design was technically challenging, time consuming, and difficult to maintain.

Serious discussion of alternatives for the North Arm was started in January 2001. Design goals included:

- A multi-pin plug and socket system
- Move the distribution box from the chamber to the racks where the HVPS is located
- Eliminate the filter /LHV plug box
- Replace the coax cables with a multi-conductor HV cable.

All if these goals have been implemented in the current north arm HVDS.

Technical details:

The plastic utility box containing the Distribution Card was tested at 5,000 volts DC with no detectable leakage current on the external surfaces. A pair of conduit type couplers insures that the wires can be strain relieved and that the possibility of water or other contaminants will not enter the box.

The Coaxial cables are the standard approved method of supplying high voltage at most physics experiments worldwide, and are on the approved cable list at Brookhaven National Laboratory.

The small plastic filter box was also tested at 5,000 volts DC, to insure there is no detectable leakage current on the external surfaces.

Item	Qty	Manufacturer	Description	Part #	Source	Cat #
1	1		assembly Drawing	63Y299054	P-25 LANL	
2	*	Coleman/CCI	Coax Cable, Red, 2300 v rms, 75 ohm	RG59 B/U	BNL Stock	A-30304
3	2	Alpha Wire	Soldering Sleeve, 105 deg C	FIT-SLV-16	Summit	
4	8.5"	Judd Wire	Wire, 24 AWG, 7/32 Str., 5 kV, Red	V0505003	Summit	
5	4"	Judd Wire	Wire, 24 AWG, 7/32 Str., 5 kV, Red	V0505003	Summit	
6	2		see spreadsheet "63Y299054 Labels & Lengths"			

Alpha, Braid Shield Grounding System, FIT-SLV Soldering Sleeves
Use Alpha FIT GUN-2 with GA-3 reflector or Alpha FIT GUN-1R1 with GA-2 relector
Heating time is 3 to 5 seconds.
Heat should be maintained on sleeve until solder ring changes from dull grey to bright silver and flows toward dam on both ends of sleeve.

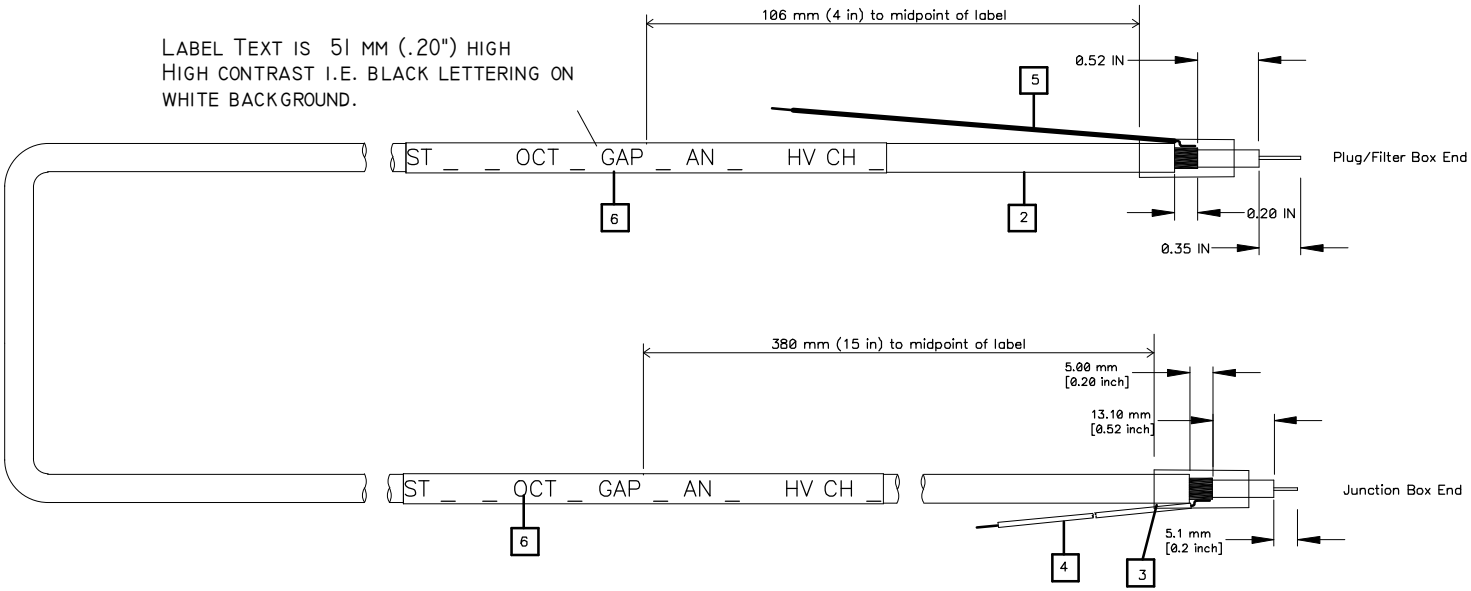

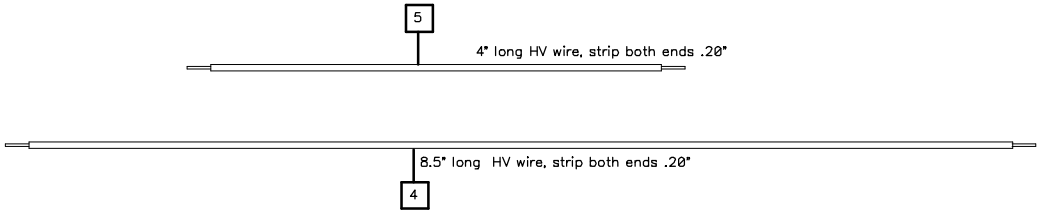

Los Alamos National Laboratory	
Title PHENIX MUTR HV DISTRIBUTION SYSTEM	
ASSEMBLY DRAWING HV COAX CABLE	
Size B	Date Originated: 7 Apr 2000
	Date Last Revised: 23 June 2000
LANL DWG # 63Y299054	Approved By: Sondheim
PHENIX DWG #105-0312-0212	Drawn by: G. Hart
Filename 299054.pcb	Sheet of 1

Station 1 South 299054 (PHENIX 105-0312-0212) Cables 23 June 2000

Bundle 1	West				Length	Length		Bundle 13	East				Length	Length
Labels					Meters	Feet		Labels					Meters	Feet
ST	OC	GAP	AN	HV CH				ST	OC	GAP	AN	HV CH		
1 S	1	1	1-1	1	21.6	71		1 S	5	1	1-1	1	17.9	59
1 S	1	1	1-2	2	21.6	71		1 S	5	1	1-2	2	17.9	59
1 S	1	1	1-3	3	21.6	71		1 S	5	1	1-3	3	17.9	59
1 S	1	1	2	4	21.6	71		1 S	5	1	2	4	17.9	59
1 S	1	1	3	5	21.6	71		1 S	5	1	3	5	17.9	59
1 S	1	1	4	6	21.6	71		1 S	5	1	4	6	17.9	59
1 S	1	1	5	7	21.6	71		1 S	5	1	5	7	17.9	59
1 S	1	1	6	8	21.6	71		1 S	5	1	6	8	17.9	59
Bundle 2	West							Bundle 14	East					
Labels								Labels						
ST	OC	GAP	AN	HV CH				ST	OC	GAP	AN	HV CH		
1 S	1	2	1-1	1	21.6	71		1 S	5	2	1-1	1	17.9	59
1 S	1	2	1-2	2	21.6	71		1 S	5	2	1-2	2	17.9	59
1 S	1	2	1-3	3	21.6	71		1 S	5	2	1-3	3	17.9	59
1 S	1	2	2	4	21.6	71		1 S	5	2	2	4	17.9	59
1 S	1	2	3	5	21.6	71		1 S	5	2	3	5	17.9	59
1 S	1	2	4	6	21.6	71		1 S	5	2	4	6	17.9	59
1 S	1	2	5	7	21.6	71		1 S	5	2	5	7	17.9	59
1 S	1	2	6	8	21.6	71		1 S	5	2	6	8	17.9	59
Bundle 3	West							Bundle 15	East					
Labels								Labels						
ST	OC	GAP	AN	HV CH				ST	OC	GAP	AN	HV CH		
1 S	1	3	1-1	1	21.6	71		1 S	5	3	1-1	1	17.9	59
1 S	1	3	1-2	2	21.6	71		1 S	5	3	1-2	2	17.9	59
1 S	1	3	1-3	3	21.6	71		1 S	5	3	1-3	3	17.9	59
1 S	1	3	2	4	21.6	71		1 S	5	3	2	4	17.9	59
1 S	1	3	3	5	21.6	71		1 S	5	3	3	5	17.9	59
1 S	1	3	4	6	21.6	71		1 S	5	3	4	6	17.9	59
1 S	1	3	5	7	21.6	71		1 S	5	3	5	7	17.9	59
1 S	1	3	6	8	21.6	71		1 S	5	3	6	8	17.9	59
Bundle 4	West							Bundle 16	East					
Labels								Labels						
ST	OC	GAP	AN	HV CH				ST	OC	GAP	AN	HV CH		
1 S	2	1	1-1	1	21.6	71		1 S	6	1	1-1	1	17.9	59
1 S	2	1	1-2	2	21.6	71		1 S	6	1	1-2	2	17.9	59
1 S	2	1	1-3	3	21.6	71		1 S	6	1	1-3	3	17.9	59
1 S	2	1	2	4	21.6	71		1 S	6	1	2	4	17.9	59
1 S	2	1	3	5	21.6	71		1 S	6	1	3	5	17.9	59
1 S	2	1	4	6	21.6	71		1 S	6	1	4	6	17.9	59
1 S	2	1	5	7	21.6	71		1 S	6	1	5	7	17.9	59
1 S	2	1	6	8	21.6	71		1 S	6	1	6	8	17.9	59
Bundle 5	West							Bundle 17	East					
Labels								Labels						
ST	OC	GAP	AN	HV CH				ST	OC	GAP	AN	HV CH		
1 S	2	2	1-1	1	21.6	71		1 S	6	2	1-1	1	17.9	59
1 S	2	2	1-2	2	21.6	71		1 S	6	2	1-2	2	17.9	59
1 S	2	2	1-3	3	21.6	71		1 S	6	2	1-3	3	17.9	59
1 S	2	2	2	4	21.6	71		1 S	6	2	2	4	17.9	59
1 S	2	2	3	5	21.6	71		1 S	6	2	3	5	17.9	59
1 S	2	2	4	6	21.6	71		1 S	6	2	4	6	17.9	59
1 S	2	2	5	7	21.6	71		1 S	6	2	5	7	17.9	59
1 S	2	2	6	8	21.6	71		1 S	6	2	6	8	17.9	59

Station 1 South 299054 (PHENIX 105-0312-0212) Cables 23 June 2000

Bundle 6	West				Length	Length		Bundle 18	East				Length	Length
Labels					Meters	Feet		Labels					Meters	Feet
ST	OC	GAP	AN	HV CH				ST	OC	GAP	AN	HV CH		
1 S	2	3	1-1	1	21.6	71		1 S	6	3	1-1	1	17.9	59
1 S	2	3	1-2	2	21.6	71		1 S	6	3	1-2	2	17.9	59
1 S	2	3	1-3	3	21.6	71		1 S	6	3	1-3	3	17.9	59
1 S	2	3	2	4	21.6	71		1 S	6	3	2	4	17.9	59
1 S	2	3	3	5	21.6	71		1 S	6	3	3	5	17.9	59
1 S	2	3	4	6	21.6	71		1 S	6	3	4	6	17.9	59
1 S	2	3	5	7	21.6	71		1 S	6	3	5	7	17.9	59
1 S	2	3	6	8	21.6	71		1 S	6	3	6	8	17.9	59
Bundle 7	East							Bundle 19	West					
Labels								Labels						
ST	OC	GAP	AN	HV CH				ST	OC	GAP	AN	HV CH		
1 S	3	1	1-1	1	17.9	59		1 S	7	1	1-1	1	21.6	71
1 S	3	1	1-2	2	17.9	59		1 S	7	1	1-2	2	21.6	71
1 S	3	1	1-3	3	17.9	59		1 S	7	1	1-3	3	21.6	71
1 S	3	1	2	4	17.9	59		1 S	7	1	2	4	21.6	71
1 S	3	1	3	5	17.9	59		1 S	7	1	3	5	21.6	71
1 S	3	1	4	6	17.9	59		1 S	7	1	4	6	21.6	71
1 S	3	1	5	7	17.9	59		1 S	7	1	5	7	21.6	71
1 S	3	1	6	8	17.9	59		1 S	7	1	6	8	21.6	71
Bundle 8	East							Bundle 20	West					
Labels								Labels						
ST	OC	GAP	AN	HV CH				ST	OC	GAP	AN	HV CH		
1 S	3	2	1-1	1	17.9	59		1 S	7	2	1-1	1	21.6	71
1 S	3	2	1-2	2	17.9	59		1 S	7	2	1-2	2	21.6	71
1 S	3	2	1-3	3	17.9	59		1 S	7	2	1-3	3	21.6	71
1 S	3	2	2	4	17.9	59		1 S	7	2	2	4	21.6	71
1 S	3	2	3	5	17.9	59		1 S	7	2	3	5	21.6	71
1 S	3	2	4	6	17.9	59		1 S	7	2	4	6	21.6	71
1 S	3	2	5	7	17.9	59		1 S	7	2	5	7	21.6	71
1 S	3	2	6	8	17.9	59		1 S	7	2	6	8	21.6	71
Bundle 9	East							Bundle 21	West					
Labels								Labels						
ST	OC	GAP	AN	HV CH				ST	OC	GAP	AN	HV CH		
1 S	3	3	1-1	1	17.9	59		1 S	7	3	1-1	1	21.6	71
1 S	3	3	1-2	2	17.9	59		1 S	7	3	1-2	2	21.6	71
1 S	3	3	1-3	3	17.9	59		1 S	7	3	1-3	3	21.6	71
1 S	3	3	2	4	17.9	59		1 S	7	3	2	4	21.6	71
1 S	3	3	3	5	17.9	59		1 S	7	3	3	5	21.6	71
1 S	3	3	4	6	17.9	59		1 S	7	3	4	6	21.6	71
1 S	3	3	5	7	17.9	59		1 S	7	3	5	7	21.6	71
1 S	3	3	6	8	17.9	59		1 S	7	3	6	8	21.6	71
Bundle 10	East							Bundle 22	West					
Labels								Labels						
ST	OC	GAP	AN	HV CH				ST	OC	GAP	AN	HV CH		
1 S	4	1	1-1	1	17.9	59		1 S	8	1	1-1	1	21.6	71
1 S	4	1	1-2	2	17.9	59		1 S	8	1	1-2	2	21.6	71
1 S	4	1	1-3	3	17.9	59		1 S	8	1	1-3	3	21.6	71
1 S	4	1	2	4	17.9	59		1 S	8	1	2	4	21.6	71
1 S	4	1	3	5	17.9	59		1 S	8	1	3	5	21.6	71
1 S	4	1	4	6	17.9	59		1 S	8	1	4	6	21.6	71
1 S	4	1	5	7	17.9	59		1 S	8	1	5	7	21.6	71
1 S	4	1	6	8	17.9	59		1 S	8	1	6	8	21.6	71

Station 1 South 299054 (PHENIX 105-0312-0212) Cables 23 June 2000														
Bundle 11	East				Length	Length		Bundle 23	West				Length	Length
Labels					Meters	Feet		Labels					Meters	Feet
ST	OC	GAP	AN	HV CH				ST	OC	GAP	AN	HV CH		
1 S	4	2	1-1	1	17.9	59		1 S	8	2	1-1	1	21.6	71
1 S	4	2	1-2	2	17.9	59		1 S	8	2	1-2	2	21.6	71
1 S	4	2	1-3	3	17.9	59		1 S	8	2	1-3	3	21.6	71
1 S	4	2	2	4	17.9	59		1 S	8	2	2	4	21.6	71
1 S	4	2	3	5	17.9	59		1 S	8	2	3	5	21.6	71
1 S	4	2	4	6	17.9	59		1 S	8	2	4	6	21.6	71
1 S	4	2	5	7	17.9	59		1 S	8	2	5	7	21.6	71
1 S	4	2	6	8	17.9	59		1 S	8	2	6	8	21.6	71
Bundle 12	East							Bundle 24	West					
Labels								Labels						
ST	OC	GAP	AN	HV CH				ST	OC	GAP	AN	HV CH		
1 S	4	3	1-1	1	17.9	59		1 S	8	3	1-1	1	21.6	71
1 S	4	3	1-2	2	17.9	59		1 S	8	3	1-2	2	21.6	71
1 S	4	3	1-3	3	17.9	59		1 S	8	3	1-3	3	21.6	71
1 S	4	3	2	4	17.9	59		1 S	8	3	2	4	21.6	71
1 S	4	3	3	5	17.9	59		1 S	8	3	3	5	21.6	71
1 S	4	3	4	6	17.9	59		1 S	8	3	4	6	21.6	71
1 S	4	3	5	7	17.9	59		1 S	8	3	5	7	21.6	71
1 S	4	3	6	8	17.9	59		1 S	8	3	6	8	21.6	71
					1896	6240							1896	6240
	Meters	Ft												
Total Cable	3792	12480												

Station 2 South 299054 (PHENIX 105-0312-0212) Cables 23 June 2000														
Bundle 1					Length	Length		Bundle 7					Length	Length
Labels					M	Ft.		Labels					M	Ft.
ST	OC	GAP	AN	HV CH				ST	OC	GAP	AN	HV CH		
2 S	1	1	1&2	1	15.2	50		2 S	5	1	1&2	1	7.9	26
2 S	1	1	3	2	15.2	50		2 S	5	1	3	2	7.9	26
2 S	1	1	4	3	15.2	50		2 S	5	1	4	3	7.9	26
2 S	1	1	5	4	15.2	50		2 S	5	1	5	4	7.9	26
2 S	1	2	1&2	5	15.2	50		2 S	5	2	1&2	5	7.9	26
2 S	1	2	3	6	15.2	50		2 S	5	2	3	6	7.9	26
2 S	1	2	4	7	15.2	50		2 S	5	2	4	7	7.9	26
2 S	1	2	5	8	15.2	50		2 S	5	2	5	8	7.9	26
Bundle 2								Bundle 8						
Labels								Labels						
ST	OC	GAP	AN	HV CH				ST	OC	GAP	AN	HV CH		
2 S	1	3	1&2	1	15.2	50		2 S	5	3	1&2	1	7.9	26
2 S	1	3	3	2	15.2	50		2 S	5	3	3	2	7.9	26
2 S	1	3	4	3	15.2	50		2 S	5	3	4	3	7.9	26
2 S	1	3	5	4	15.2	50		2 S	5	3	5	4	7.9	26
2 S	2	1	1&2	5	11.6	38		2 S	6	1	1&2	5	11.2	37
2 S	2	1	3	6	11.6	38		2 S	6	1	3	6	11.2	37
2 S	2	1	4	7	11.6	38		2 S	6	1	4	7	11.2	37
2 S	2	1	5	8	11.6	38		2 S	6	1	5	8	11.2	37
Bundle 3								Bundle 9						
Labels								Labels						
ST	OC	GAP	AN	HV CH				ST	OC	GAP	AN	HV CH		
2 S	2	2	1&2	1	11.6	38		2 S	6	2	1&2	1	11.2	37
2 S	2	2	3	2	11.6	38		2 S	6	2	3	2	11.2	37
2 S	2	2	4	3	11.6	38		2 S	6	2	4	3	11.2	37
2 S	2	2	5	4	11.6	38		2 S	6	2	5	4	11.2	37
2 S	2	3	1&2	5	11.6	38		2 S	6	3	1&2	5	11.2	37
2 S	2	3	3	6	11.6	38		2 S	6	3	3	6	11.2	37
2 S	2	3	4	7	11.6	38		2 S	6	3	4	7	11.2	37
2 S	2	3	5	8	11.6	38		2 S	6	3	5	8	11.2	37
Bundle 4								Bundle 10						
Labels								Labels						
ST	OC	GAP	AN	HV CH				ST	OC	GAP	AN	HV CH		
2 S	3	1	1&2	1	7	23		2 S	7	1	1&2	1	14.3	47
2 S	3	1	3	2	7	23		2 S	7	1	3	2	14.3	47
2 S	3	1	4	3	7	23		2 S	7	1	4	3	14.3	47
2 S	3	1	5	4	7	23		2 S	7	1	5	4	14.3	47
2 S	3	2	1&2	5	7	23		2 S	7	2	1&2	5	14.3	47
2 S	3	2	3	6	7	23		2 S	7	2	3	6	14.3	47
2 S	3	2	4	7	7	23		2 S	7	2	4	7	14.3	47
2 S	3	2	5	8	7	23		2 S	7	2	5	8	14.3	47

Station 2 South 299054 (PHENIX 105-0312-0212) Cables 23 June 2000														
Bundle 5								Bundle 11						
Labels								Labels						
ST	OC	GAP	AN	HV CH				ST	OC	GAP	AN	HV CH		
2 S	3	3	1&2	1	7	23		2 S	7	3	1&2	1	14.3	47
2 S	3	3	3	2	7	23		2 S	7	3	3	2	14.3	47
2 S	3	3	4	3	7	23		2 S	7	3	4	3	14.3	47
2 S	3	3	5	4	7	23		2 S	7	3	5	4	14.3	47
2 S	4	1	1&2	5	3.9	13		2 S	8	1	1&2	5	17	56
2 S	4	1	3	6	3.9	13		2 S	8	1	3	6	17	56
2 S	4	1	4	7	3.9	13		2 S	8	1	4	7	17	56
2 S	4	1	5	8	3.9	13		2 S	8	1	5	8	17	56
Bundle 6								Bundle 12						
Labels								Labels						
ST	OC	GAP	AN	HV CH				ST	OC	GAP	AN	HV CH		
2 S	4	2	1&2	1	3.9	13		2 S	8	2	1&2	1	17	56
2 S	4	2	3	2	3.9	13		2 S	8	2	3	2	17	56
2 S	4	2	4	3	3.9	13		2 S	8	2	4	3	17	56
2 S	4	2	5	4	3.9	13		2 S	8	2	5	4	17	56
2 S	4	3	1&2	5	3.9	13		2 S	8	3	1&2	5	17	56
2 S	4	3	3	6	3.9	13		2 S	8	3	3	6	17	56
2 S	4	3	4	7	3.9	13		2 S	8	3	4	7	17	56
2 S	4	3	5	8	3.9	13		2 S	8	3	5	8	17	56
					452.4	1488							604.8	1992
	Meters	Ft												
Total Cable	1057	3480												

Station 3 South 299054 (PHENIX 105-0312-0212) Cables Updated 19 September 2000														
Bundle 1					Length	Length		Bundle 5					Length	Length
Labels					Meters	Feet		Labels					Meters	Feet
ST	OC	GAP	AN	HV CH				ST	OC	GAP	AN	HV CH		
3 S	1	1	1&2	1	16.5	54		3 S	5	1	1&2	1	9.2	30
3 S	1	1	3&4	2	16.5	54		3 S	5	1	3&4	2	9.2	30
3 S	1	1	5&6	3	16.5	54		3 S	5	1	5&6	3	9.2	30
3 S	1	1	7	4	16.5	54		3 S	5	1	7	4	9.2	30
3 S	1	3	1&2	5	16.5	54		3 S	5	3	1&2	5	9.2	30
3 S	1	3	3&4	6	16.5	54		3 S	5	3	3&4	6	9.2	30
3 S	1	3	5&6	7	16.5	54		3 S	5	3	5&6	7	9.2	30
3 S	1	3	7	8	16.5	54		3 S	5	3	7	8	9.2	30
Bundle 2								Bundle 6						
Labels								Labels						
ST	OC	GAP	AN	HV CH				ST	OC	GAP	AN	HV CH		
3 S	2	1	1&2	1	12.9	42		3 S	6	1	1&2	1	12.5	41
3 S	2	1	3&4	2	12.9	42		3 S	6	1	3&4	2	12.5	41
3 S	2	1	5&6	3	12.9	42		3 S	6	1	5&6	3	12.5	41
3 S	2	1	7	4	12.9	42		3 S	6	1	7	4	12.5	41
3 S	2	3	1&2	5	12.9	42		3 S	6	3	1&2	5	12.5	41
3 S	2	3	3&4	6	12.9	42		3 S	6	3	3&4	6	12.5	41
3 S	2	3	5&6	7	12.9	42		3 S	6	3	5&6	7	12.5	41
3 S	2	3	7	8	12.9	42		3 S	6	3	7	8	12.5	41
Bundle 3								Bundle 7						
Labels								Labels						
ST	OC	GAP	AN	HV CH				ST	OC	GAP	AN	HV CH		
3 S	3	1	1&2	1	8.3	27		3 S	7	1	1&2	1	15.6	51
3 S	3	1	3&4	2	8.3	27		3 S	7	1	3&4	2	15.6	51
3 S	3	1	5&6	3	8.3	27		3 S	7	1	5&6	3	15.6	51
3 S	3	1	7	4	8.3	27		3 S	7	1	7	4	15.6	51
3 S	3	3	1&2	5	8.3	27		3 S	7	3	1&2	5	15.6	51
3 S	3	3	3&4	6	8.3	27		3 S	7	3	3&4	6	15.6	51
3 S	3	3	5&6	7	8.3	27		3 S	7	3	5&6	7	15.6	51
3 S	3	3	7	8	8.3	27		3 S	7	3	7	8	15.6	51
Bundle 4								Bundle 8						
Labels								Labels						
ST	OC	GAP	AN	HV CH				ST	OC	GAP	AN	HV CH		
3 S	4	1	1&2	1	5.2	17		3 S	8	1	1&2	1	19.2	63
3 S	4	1	3&4	2	5.2	17		3 S	8	1	3&4	2	19.2	63
3 S	4	1	5&6	3	5.2	17		3 S	8	1	5&6	3	19.2	63
3 S	4	1	7	4	5.2	17		3 S	8	1	7	4	19.2	63
3 S	4	3	1&2	5	5.2	17		3 S	8	3	1&2	5	19.2	63
3 S	4	3	3&4	6	5.2	17		3 S	8	3	3&4	6	19.2	63
3 S	4	3	5&6	7	5.2	17		3 S	8	3	5&6	7	19.2	63
3 S	4	3	7	8	5.2	17		3 S	8	3	7	8	19.2	63
					343.2	1126							452	1482.9
	Meters	Ft												
Total Cable	795.2	2609												

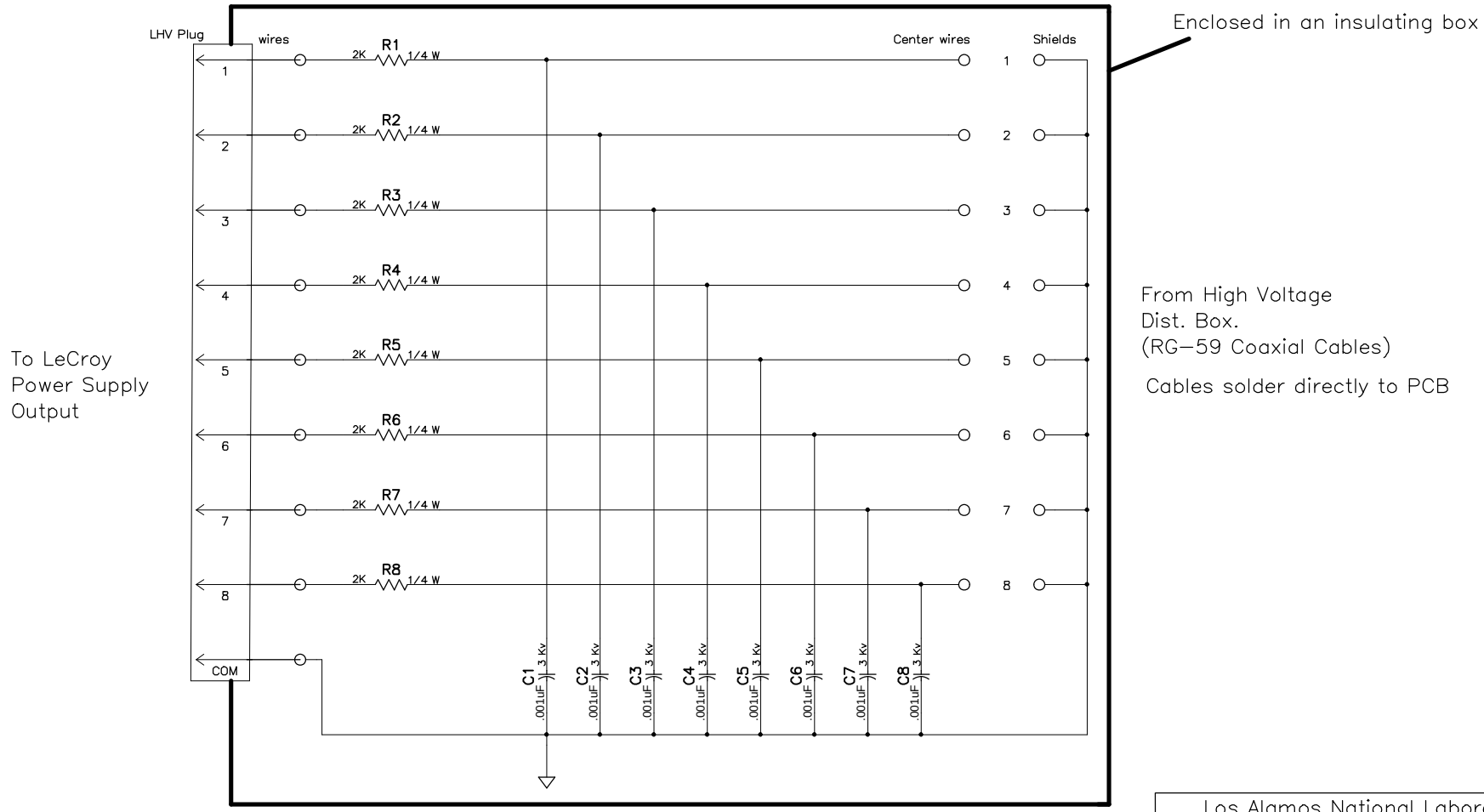

Los Alamos National Laboratory		
Title: LeCroy HV Plug/Filter box, 8 Channel		
SCHEMATIC		
Size	Date Originated: 23 Feb 2000	
	Last Revised: 5 Apr 2000	
LANL DWG #: 63Y299053		Approved By: W. Sondheim
PHENIX #: 105-0312-210		Drawn by: G. Hart
Filename: 299053RC.sch		Sheet of

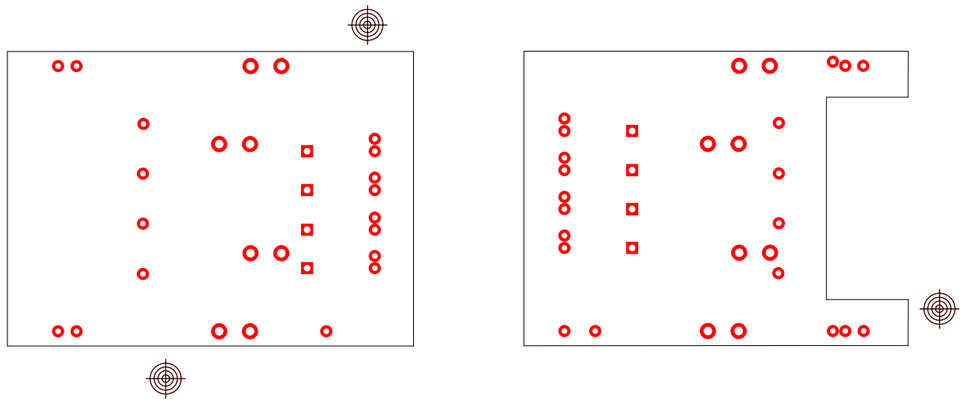

Layer 1 (TOP)

Los Alamos National Laboratory			
Title	PHENIX MuTr HV Distribution System		
LeCroy HV Plug/Filter box, 8 channel			
Size B	Date Originated: 30 APR 1998		
	Date Last Revised: 21 Apr 2000		
LANL DWG #	63Y299053A	Approved By:	W. Sondheim
PHENIX DWG #:	105-0312-210	Drawn by:	G. Hart
Filename	299053a.pcb	Sheet	1 of 8

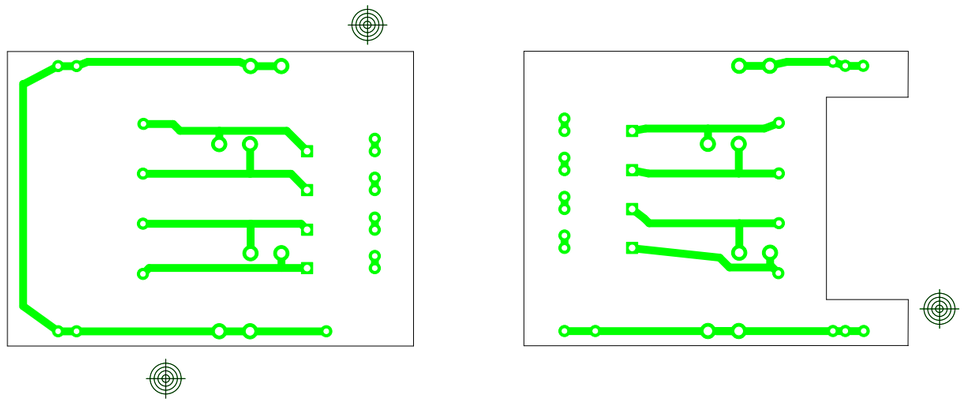

Layer 2 (Bottom)

Los Alamos National Laboratory			
Title	PHENIX MuTr HV Distribution System		
LeCroy HV Plug/Filter box, 8 channel			
Size B	Date Originated: 30 APR 1998		
	Date Last Revised: 21 Apr 2000		
LANL DWG # 63Y299053A		Approved By: W. Sondheim	
PHENIX DWG #: 105-0312-210		Drawn by: G. Hart	
Filename 299053a.pcb		Sheet 2 of 8	

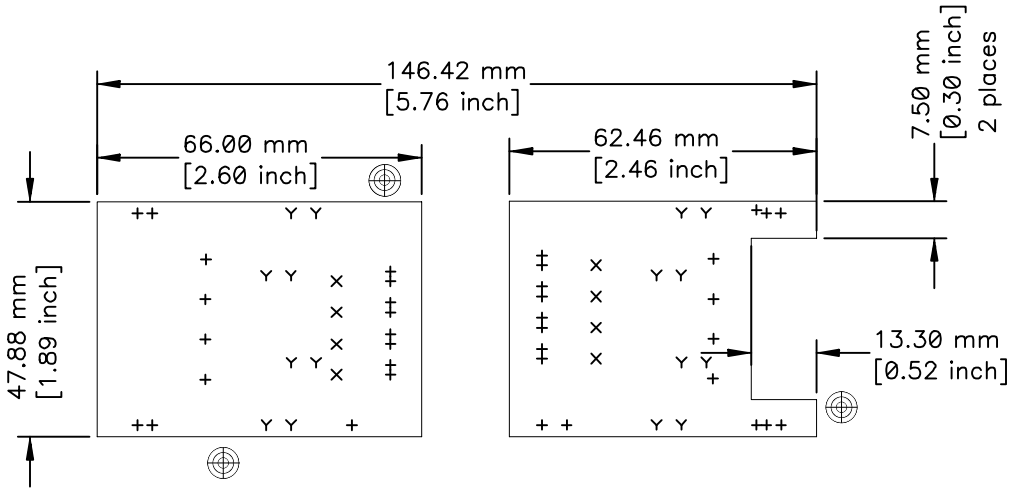

Cut into two separate cards

1. Board material to be FR4
2. Final board thickness to be .093" (2.36mm)
3. Tin Lead finish
4. All holes plated thru
5. All tolerances to be +/− .005" (.127mm) unless otherwise stated.
6. Use non−conductive ink for manufacturer legends, date codes, etc. Do not add any copper lettering/symbols to any layer.
7. Standard commercial solder mask & silscreen
8. NC Drill data:
units=inches
ASCII none
Leading Zero Supression
9. Fabricate to IPC 4101

Drill Symbol Table		
Hole Dia (mm)	Symbol	Quantity
0.81	+	37
0.96	×	8
1.29	Y	16

Los Alamos National Laboratory		
Title	PHENIX MuTr HV Distribution System	
	LeCroy HV Plug/Filter box, 8 channel	
Size B	Date Originated: 30 APR 1998	
	Date Last Revised: 9 Apr 2000	
LANL DWG # 63Y299053A		Approved By: W. Sondheim
PHENIX DWG #: 105−0312−210		Drawn by: G. Hart
Filename 299053a.pcb		Sheet 5 of 8

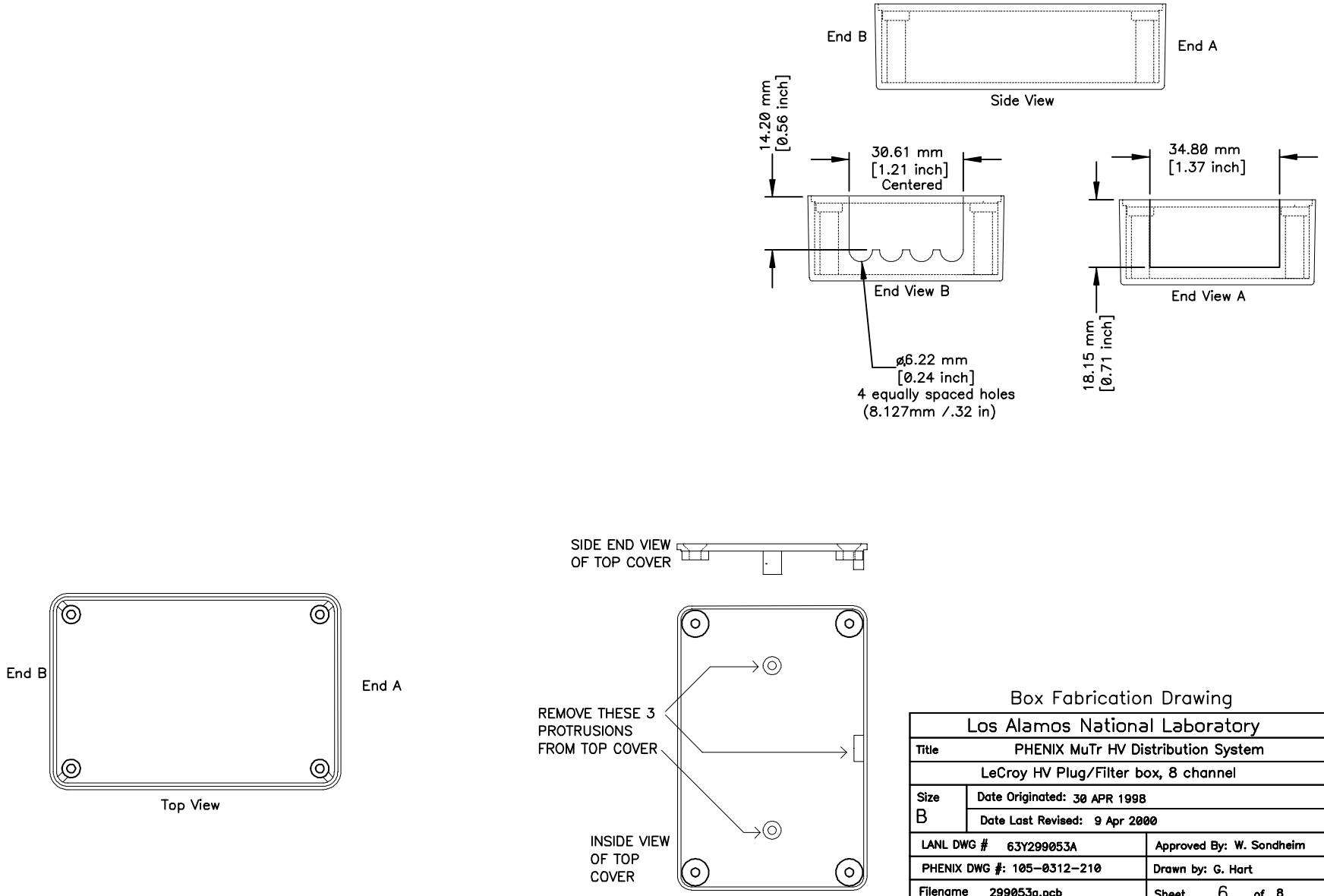

Box Fabrication Drawing

Los Alamos National Laboratory		
Title	PHENIX MuTr HV Distribution System	
LeCroy HV Plug/Filter box, 8 channel		
Size B	Date Originated: 30 APR 1998	
	Date Last Revised: 9 Apr 2000	
LANL DWG # 63Y299053A		Approved By: W. Sondheim
PHENIX DWG #: 105-0312-210		Drawn by: G. Hart
Filename 299053a.pcb		Sheet 6 of 8

Item	Ref Des	Qty	Manufacturer	Description	Part #	Source	Cat #
1	R1–8	8	Multicomp	Resistor, Carbon Comp, 2 K, 1/4 W	RC1/4G202JT	Newark	10N395
2	C1–8	8	Sprague/Vishay	Capacitor, .001 uF @ 3 kv	30GAD10	Newark	46F5277
3	P1	1	AMP	LHV 8 channel plug	443161–1	BNL	
4		1	Bud	Box, Plastic, UL 94V–0, Black, w/lid	CU–789	Newark	51F3477
5	JP1, 2, OUTS	13"	Judd Wire	Wire, 24 AWG, 7/32 Str., 5 kV, Red	V0505003	Summit	
6		1		PCB, single sided, .062" thick, FR–4	63Y299053A/B		
7		1		assembly	63Y299053		

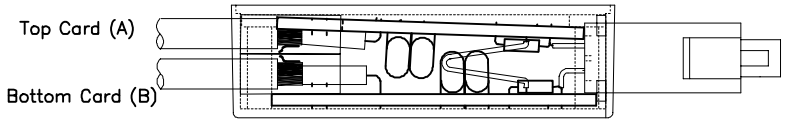

Side View, showing both cards installed in box

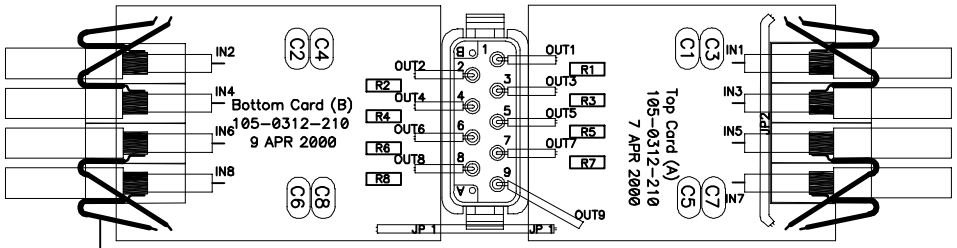

Top View, showing both halves of card before folding together to fit into box

2.4" Long

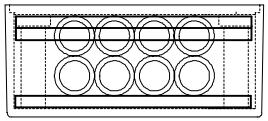

Cable end view

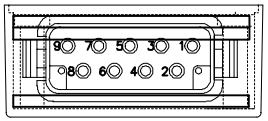

Plug end view

1. Assemble and Solder per IPC–6012, Class II
2. Apply acrylic conformal coating (1 mil minimum thickness) to both sides of assembled boards

See 63Y299054 / 105–0312–0212 for HV Coax Cable Drawing

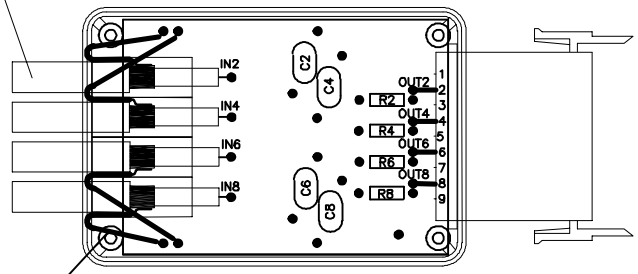

Top View, showing botom card inside plastic box

2.4" Long

ASSEMBLY DRAWING

Los Alamos National Laboratory		
Title	PHENIX MuTr HV Distribution System	
	LeCroy HV Plug/Filter box, 8 channel	
Size B	Date Originated: 30 APR 1998	
	Date Last Revised: 9 Apr 2000	
LANL DWG # 63Y299053A		Approved By: W. Sondheim
PHENIX DWG #: 105–0312–210		Drawn by: G. Hart
Filename 299053a.pcb		Sheet 7 of 8

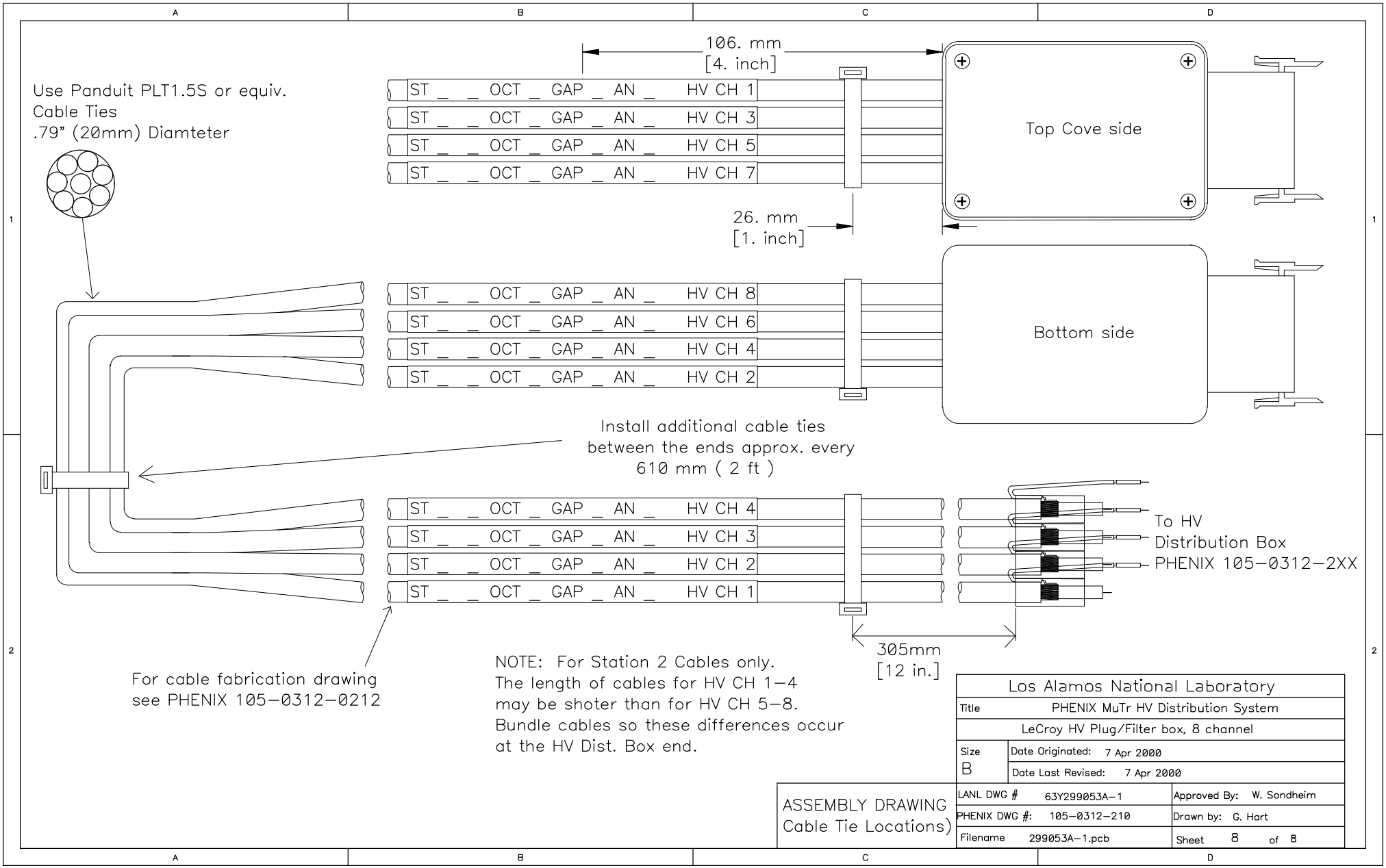
106. mm
[4. inch]
Use Panduit PLT1.5S or equiv.
Cable Ties
.79" (20mm) Diamteter
ST _ _ OCT _ GAP _ AN _ HV CH 1
ST _ _ OCT _ GAP _ AN _ HV CH 3
ST _ _ OCT _ GAP _ AN _ HV CH 5
ST _ _ OCT _ GAP _ AN _ HV CH 7
Top Cove side
26. mm
[1. inch]
ST _ _ OCT _ GAP _ AN _ HV CH 8
ST _ _ OCT _ GAP _ AN _ HV CH 6
ST _ _ OCT _ GAP _ AN _ HV CH 4
ST _ _ OCT _ GAP _ AN _ HV CH 2
Bottom side
Install additional cable ties
between the ends approx. every
610 mm (2 ft)
ST _ _ OCT _ GAP _ AN _ HV CH 4
ST _ _ OCT _ GAP _ AN _ HV CH 3
ST _ _ OCT _ GAP _ AN _ HV CH 2
ST _ _ OCT _ GAP _ AN _ HV CH 1
To HV
Distribution Box
PHENIX 105-0312-2XX
305mm
[12 in.]
For cable fabrication drawing
see PHENIX 105-0312-0212
NOTE: For Station 2 Cables only.
The length of cables for HV CH 1-4
may be shoter than for HV CH 5-8.
Bundle cables so these differences occur
at the HV Dist. Box end.
Los Alamos National Laboratory
Title PHENIX MuTr HV Distribution System
LeCroy HV Plug/Filter box, 8 channel
Size B
Date Originated: 7 Apr 2000
Date Last Revised: 7 Apr 2000
ASSEMBLY DRAWING
Cable Tie Locations)
LANL DWG # 63Y299053A-1
Approved By: W. Sondheim
PHENIX DWG #: 105-0312-210
Drawn by: G. Hart
Filename 299053A-1.pcb
Sheet 8 of 8

ITEM REF #	QTY	MANUFACTURER	DESCRIPTION	PART #	Source	Cat #	Cost/ea
	1	Weidmuller–Klippon	Box, Polyester, UL94V–0, Black	951024	Newark/Farnell	561–599	38.00
TS16– TS18	3	Weidmuller–Klippon	Terminal Block, 45 deg Clamp, 10 position	3026–6	Newark	90F9176	1.03
TS1–6, TS13–15	9	Weidmuller–Klippon	Terminal Block, 45 deg Clamp, 4 position	3077–6	Newark	90F9175	1.03
R13–24	12	Multicomp	Resistor, Carbon Comp., 1W 1K ohm, +/–10% tol, 500V	RC100G4R7KB	Newark	92N3521	.72
R1–12	12	Victoreen	Resistor, 250 Gohms, Epoxy Coated, 5Kv, 1 W, 10% tol	MOX–750–23 250,000 Meg 10%	Harrison		4.11
J1–3	3	BERG	Header, Vertical, Double Row, Gold Plated, 8 pins	67996–272	Newark	89F6219	.32
	12	BERG	Jumper socket, gold plated, open top, Blue	65474–001	Newark	94F7344	.35
	1		PCB	63Y 299047			

Place shorting plugs on J1– J3 on left pins only

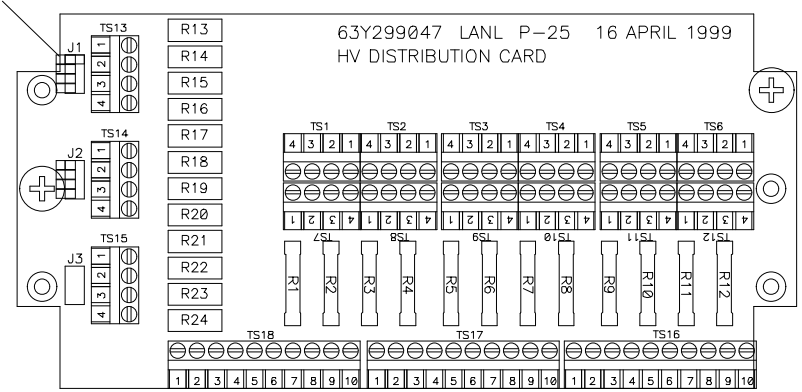

PC Card Assembly Notes

.

1 .Assemble and solder per IPC –6012 Class II

.

2. Apply acrylic conformal coating on all exposed solder joints on bottom side of card and on R1–R12 on top side

.

3. Do not install TS7 thru TS12

Board Assembly Drawing

Los Alamos National Laboratory	
Title	MUON TRACKING HV DIST. SYSTEM
	STATION I SOUTH
Size C	Date Originated: 25 FEB 1998
	Date Last Revised: 12 June 2000
LANL DWG # 63Y299047S1A	Approved By: W. Sondheim
PHENIX DWG #:105-0312-0221	Drawn by: G. Hart , P-25
Filename 299047S1.pcb	Sheet of

ITEM REF #	QTY	MANUFACTURER	DESCRIPTION	PART #	Source	Cat #	Cost/ea
1	1	O-Z/ Gedney	Connector, Strain Releif, Grip Tite Type SR	SR-100-1000	Summit Electric	OZSR1001000	3.66
2	1	O-Z/ Gedney	Connector, Strain Releif, Grip Tite Type SR	SR-50-375	Summit Electric	OZSR50375	2.31
3	2	Micro Plastics, inc	Screw, Phillips head, M6 x 8, 1 mm pitch, Plastic	50M060100N008	Barnhill Bolt	1941-M6-M8-7A00	.35
4	2	Micro Plastics, inc	Washer, M6, plastic	16M06012150	Barnhill Bolt	1926-M6-A-7	.39

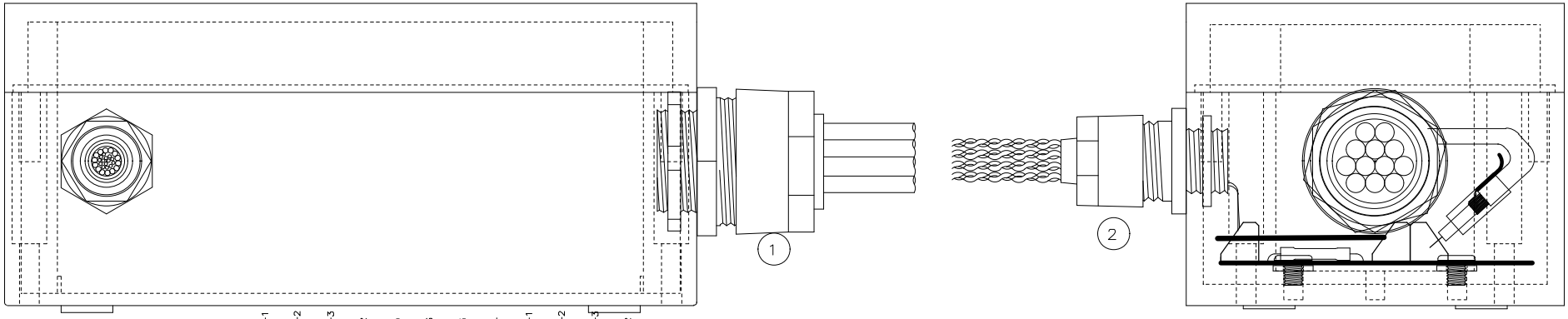

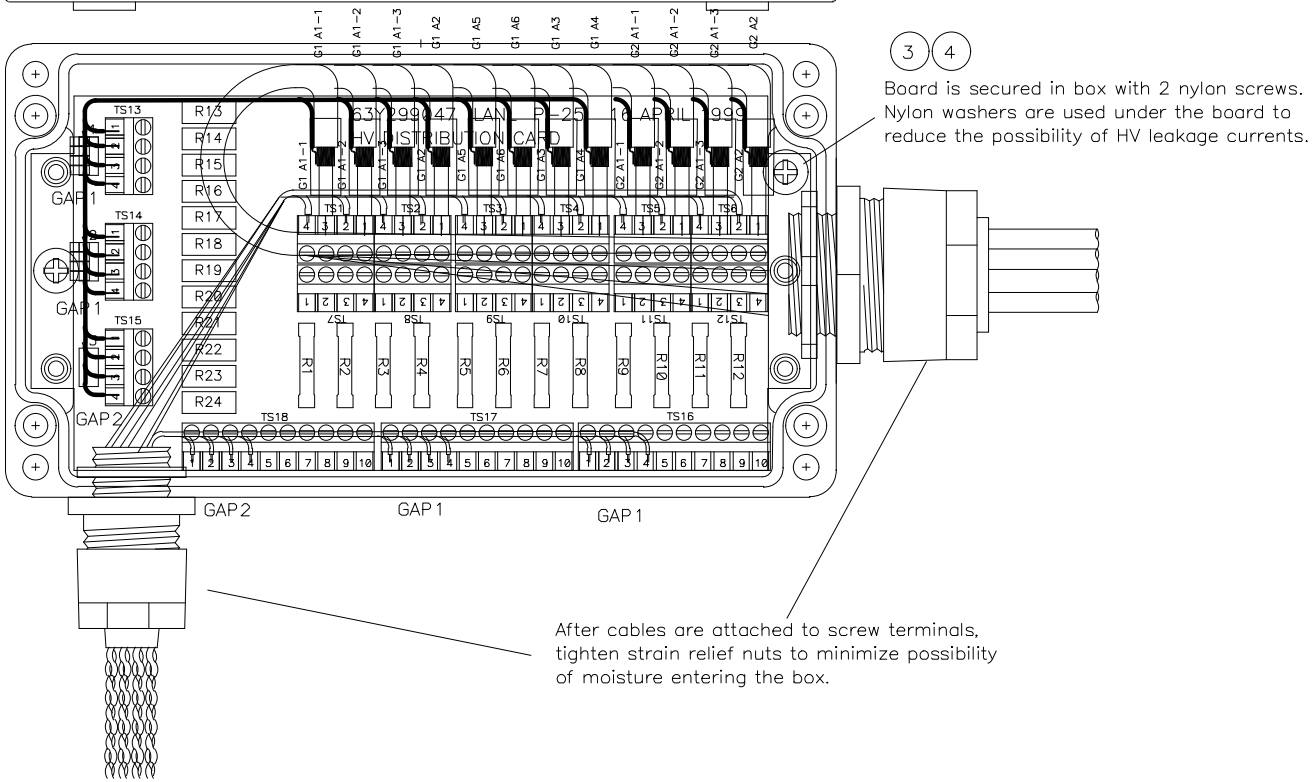

For Gaps 1 & 2
PCB & Cable Installation Assembly Drawing

Los Alamos National Laboratory		
Title	MUON TRACKING HV DIST. SYSTEM	
	STATION I SOUTH	
Size C	Date Originated: 25 FEB 1998	
	Date Last Revised: 12 June 2000	
LANL DWG # 63Y299047S1A		Approved By: W. Sondheim
PHENIX DWG #:105-0312-0221		Drawn by: G. Hart , P-25
Filename 299047S1.pcb		Sheet of

ITEM REF #	QTY	MANUFACTURER	DESCRIPTION	PART #	Source	Cat #	Cost/ea
1	1	O-Z/ Gedney	Connector, Strain Releif, Grip Tite Type SR	SR-100-1000	Summit Electric	OZSR1001000	3.66
2	1	O-Z/ Gedney	Connector, Strain Releif, Grip Tite Type SR	SR-50-375	Summit Electric	OZSR50375	2.31
3	2	Micro Plastics, inc	Screw, Phillips head, M6 x 8, 1 mm pitch, Plastic	50M060100N008	Barnhill Bolt	1941-M6-M8-7A00	.35
4	2	Micro Plastics, inc	Washer, M6, plastic	16M06012150	Barnhill Bolt	1926-M6-A-7	.39

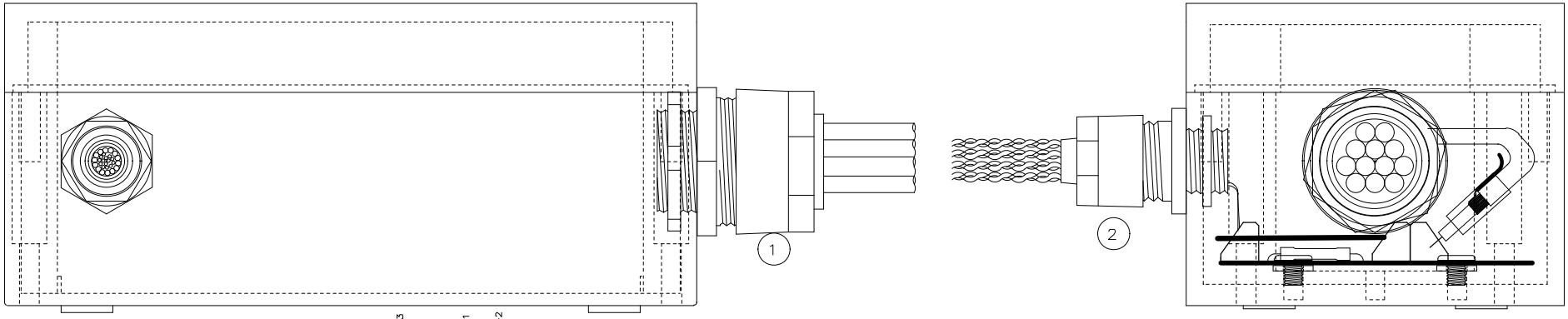

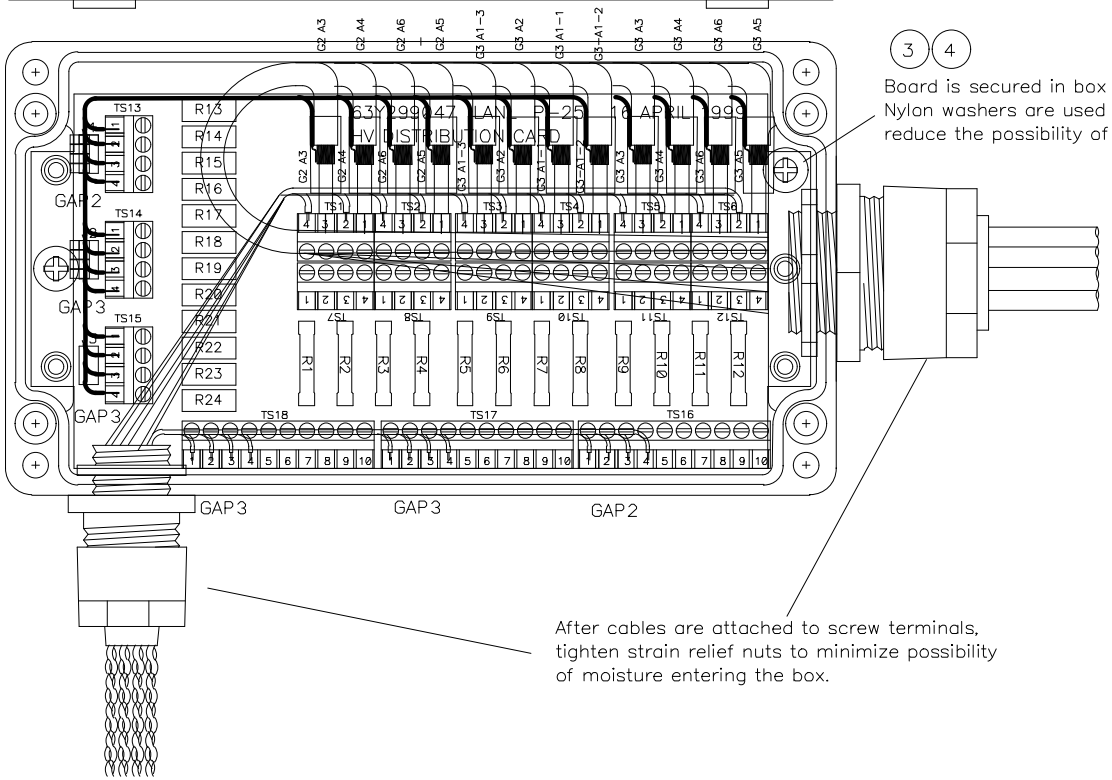

3 4

Board is secured in box with 2 nylon screws. Nylon washers are used under the board to reduce the possibility of HV leakage currents.

After cables are attached to screw terminals, tighten strain relief nuts to minimize possibility of moisture entering the box.

For Gaps 2 & 3

PCB & Cable Installation Assembly Drawing

Los Alamos National Laboratory	
Title	MUON TRACKING HV DIST. SYSTEM
	STATION I SOUTH
Size C	Date Originated: 25 FEB 1998
	Date Last Revised: 12 June 2000
LANL DWG # 63Y299047S1A	Approved By: W. Sondheim
PHENIX DWG #:105-0312-0221	Drawn by: G. Hart , P-25
Filename 299047S1.pcb	Sheet of

Box shown with lid installed

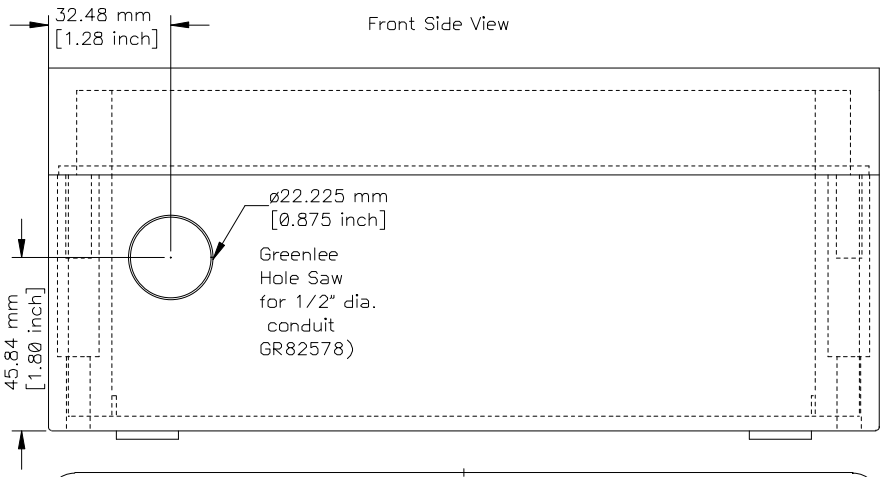

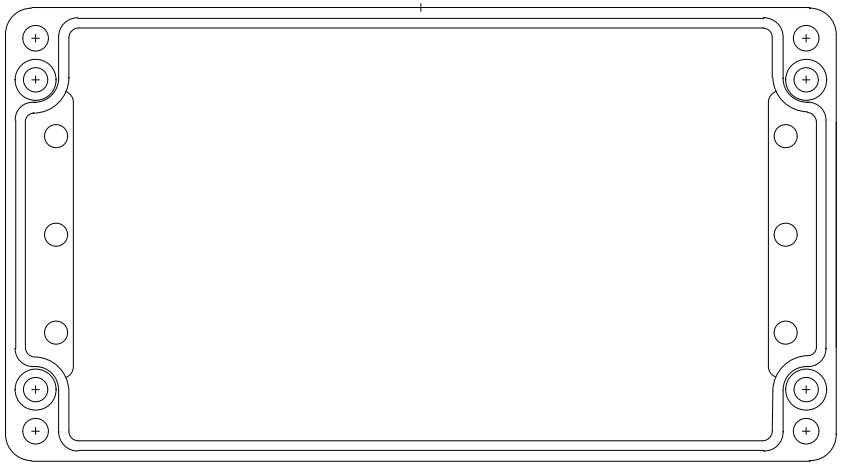

Top View

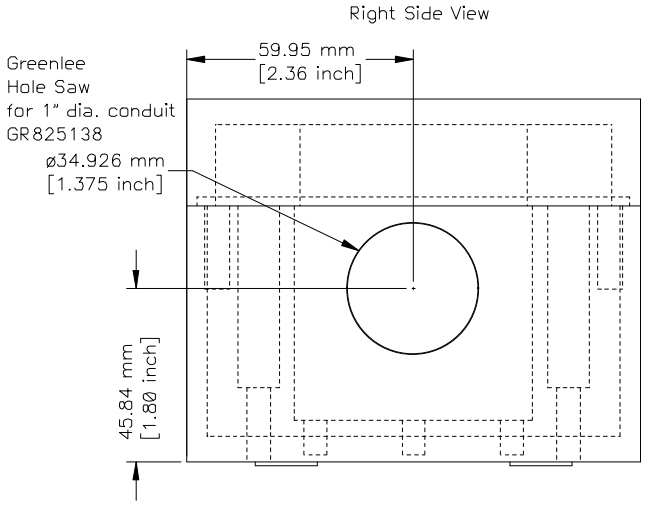

Box Fabrication Drawing

Los Alamos National Laboratory		
Title	MUON TRACKING HV DIST. SYSTEM	
STATION I SOUTH		
Size C	Date Originated: 25 FEB 1998	
	Date Last Revised: 26 June 2000	
LANL DWG # 63Y299047S1A		Approved By: W. Sondheim
PHENIX DWG #:105-0312-0221		Drawn by: G. Hart , P-25
Filename 299047S1.pcb		Sheet of

ITEM REF #	QTY	MANUFACTURER	DESCRIPTION	PART #	Source	Cat #	Cost/ea
	1	Weidmuller–Klippon	Box, Polyester, UL94V–0, Black	951024	Newark/Farnell	561–599	38.00
TS16–TS18	3	Weidmuller–Klippon	Terminal Block, 45 deg Clamp, 10 position	3026–6	Newark	90F9176	1.03
TS1–TS15	15	Weidmuller–Klippon	Terminal Block, 45 deg Clamp, 4 position	3077–6	Newark	90F9175	1.03
R13–24	12	Multicomp	Resistor, Carbon Comp., 1W 1K ohm, +/–10% tol, 500V	RC100G4R7KB	Newark	92N3521	.72
R1–12	12	Victoreen	Resistor, 250 Gohms, Epoxy Coated, 5Kv, 1 W, 10% tol	MOX–750–23 250,000 Meg 10%	Harrison		4.11
J1–3	3	BERG	Header, Vertical, Double Row, Gold Plated, 8 pins	67996–272	Newark	89F6219	.32
	12	BERG	Jumper socket, gold plated, open top, Blue	65474–001	Newark	94F7344	.35
	1		PCB	63Y 299047			

Place shorting plugs on J1–J3 on left pins only

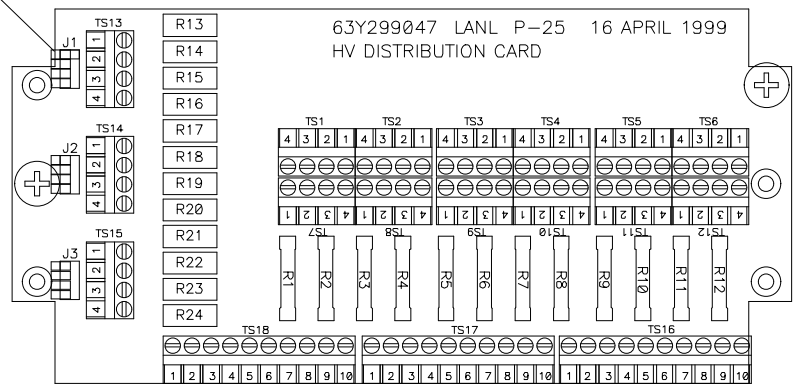

PC Card Assembly Notes

.

1 .Assemble and solder per IPC –6012 Class II

.

2. Apply acrylic conformal coating on all exposed solder joints on bottom side of card and on R1–R12 on top side

Board Assembly Drawing

Los Alamos National Laboratory	
Title	MUON TRACKING HV DIST. SYSTEM
	STATION 2 SOUTH
Size C	Date Originated: 25 FEB 1998
	Date Last Revised: 26 June 2000
LANL DWG # 63Y299047S3	Approved By: W. Sondheim
PHENIX DWG #:105-0312-0223	Drawn by: G. Hart , P-25
Filename 299047S2.pcb	Sheet of

ITEM REF #	QTY	MANUFACTURER	DESCRIPTION	PART #	Source	Cat #	Cost/ea
1	1	O-Z/ Gedney	Connector, Strain Releif, Grip Tite Type SR	SR-100-1000	Summit Electric	OZSR1001000	3.66
2	1	O-Z/ Gedney	Connector, Strain Releif, Grip Tite Type SR	SR-50-375	Summit Electric	OZSR50375	2.31
3	2	Micro Plastics, inc	Screw, Phillips head, M6 x 8, 1 mm pitch, Plastic	50M060100N008	Barnhill Bolt	1941-M6-M8-7A00	.35
4	2	Micro Plastics, inc	Washer, M6, plastic	16M06012150	Barnhill Bolt	1926-M6-A-7	.39

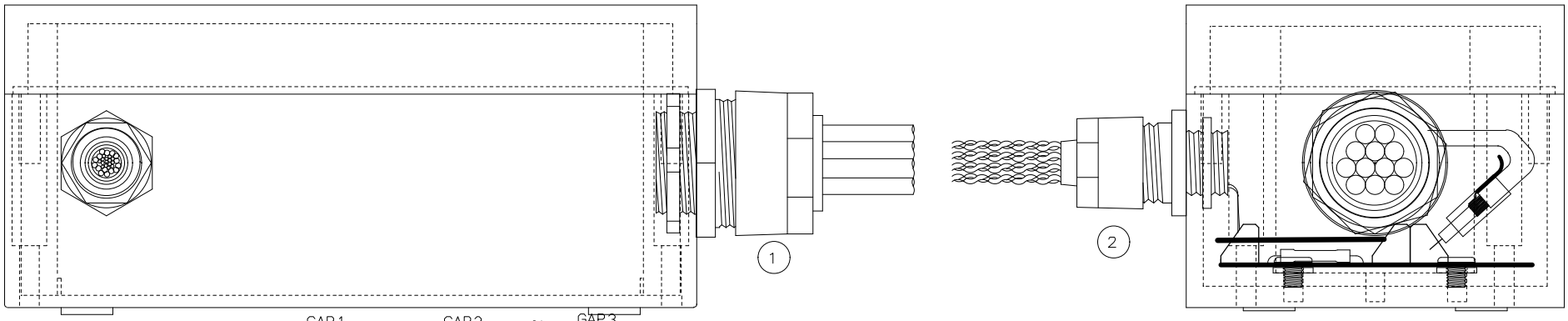

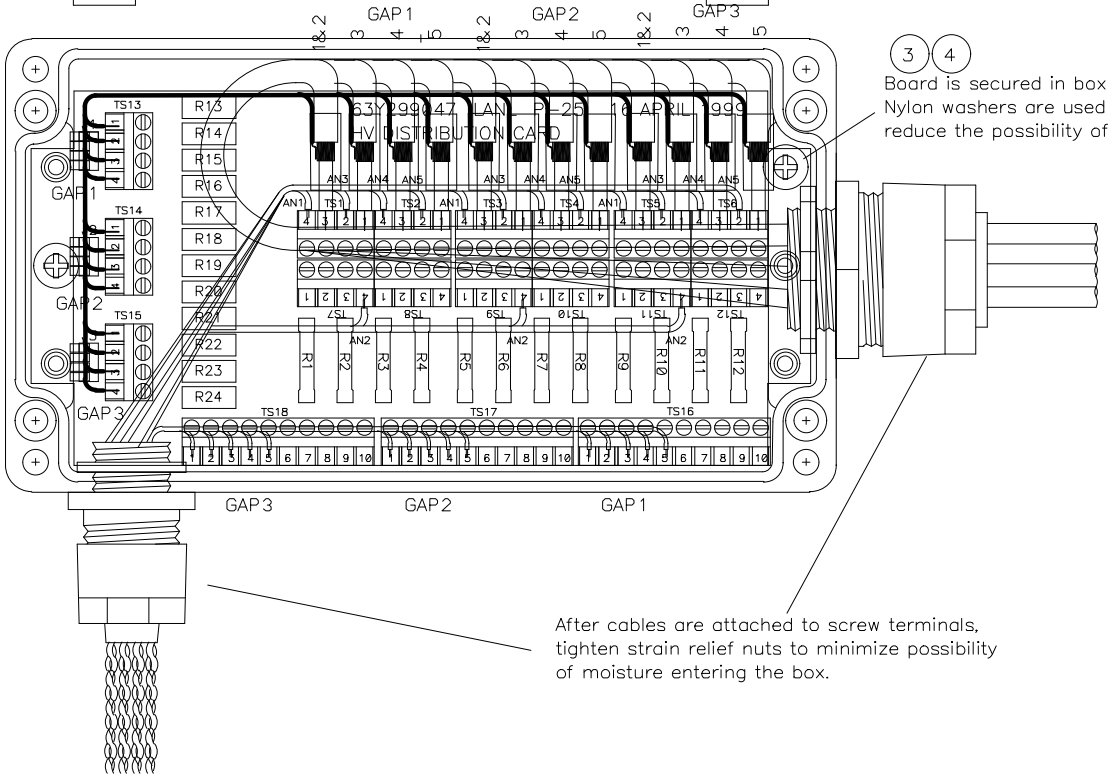

3 4

Board is secured in box with 2 nylon screws. Nylon washers are used under the board to reduce the possibility of HV leakage currents.

After cables are attached to screw terminals, tighten strain relief nuts to minimize possibility of moisture entering the box.

PCB & Cable Installation Assembly Drawing

Los Alamos National Laboratory		
Title	MUON TRACKING HV DIST. SYSTEM	
	STATION 2 SOUTH	
Size C	Date Originated: 25 FEB 1998	
	Date Last Revised: 21 Apr 00	
LANL DWG # 63Y299047S3		Approved By: W. Sondheim
PHENIX DWG #:105-0312-0223		Drawn by: G. Hart , P-25
Filename 299047S2.pcb		Sheet of

Box shown with lid installed

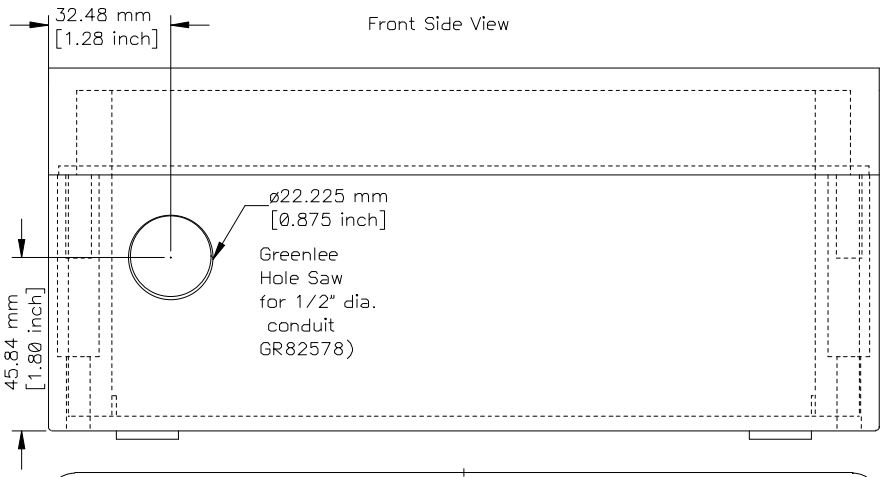

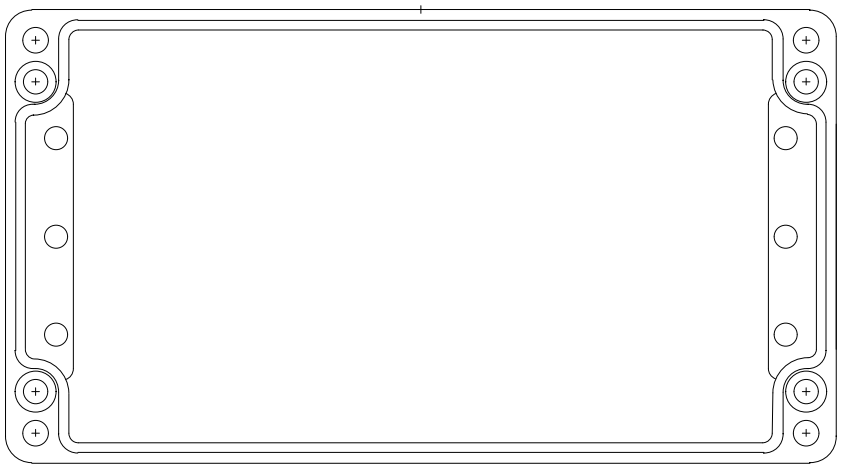

Top View

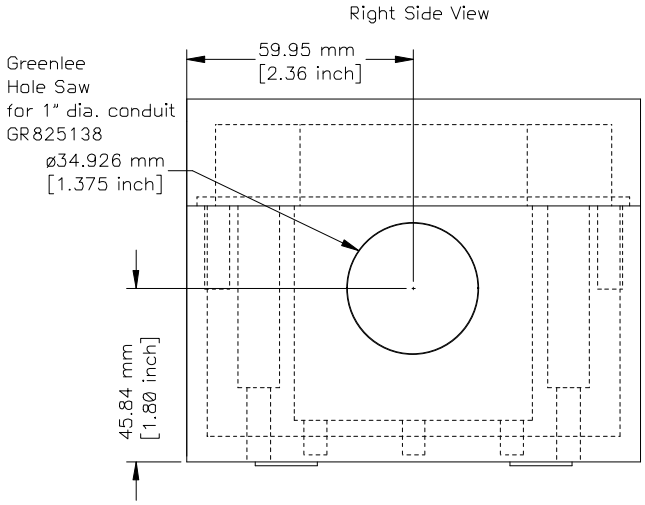

Box Fabrication Drawing

Los Alamos National Laboratory		
Title	MUON TRACKING HV DIST. SYSTEM	
STATION 2 SOUTH		
Size C	Date Originated: 25 FEB 1998	
	Date Last Revised: 26 June 2000	
LANL DWG # 63Y299047S3		Approved By: W. Sondheim
PHENIX DWG #:105-0312-0223		Drawn by: G. Hart , P-25
Filename 299047S2.pcb		Sheet of

ITEM REF #	QTY	MANUFACTURER	DESCRIPTION	PART #	Source	Cat #	Cost/ea
	1	Weidmuller–Klippon	Box, Polyester, UL94V–0, Black	951024	Newark/Farnell	561–599	38.00
TS16, TS17	2	Weidmuller–Klippon	Terminal Block, 45 deg Clamp, 10 position	3026–6	Newark	90F9176	1.03
TS1–4, TS7–10,	10	Weidmuller–Klippon	Terminal Block, 45 deg Clamp, 4 position	3077–6	Newark	90F9175	1.03
TS13–14							
R13–20	8	Multicomp	Resistor, Carbon Comp., 1W 1K ohm, +/–10% tol, 500V	RC100G4R7KB	Newark	92N3521	.72
R1–8	8	Victoreen	Resistor, 250 Gohms, Epoxy Coated, 5Kv, 1 W, 10% tol	MOX–750–23 250,000 Meg 10%	Harrison		4.11
J1–2	2	BERG	Header, Vertical, Double Row, Gold Plated, 8 pins	67996–272	Newark	89F6219	.32
	8	BERG	Jumper socket, gold plated, open top, Blue	65474–001	Newark	94F7344	.35
	1		PCB	63Y 299047			

Place shorting plugs on J1 & J2 on left pins only

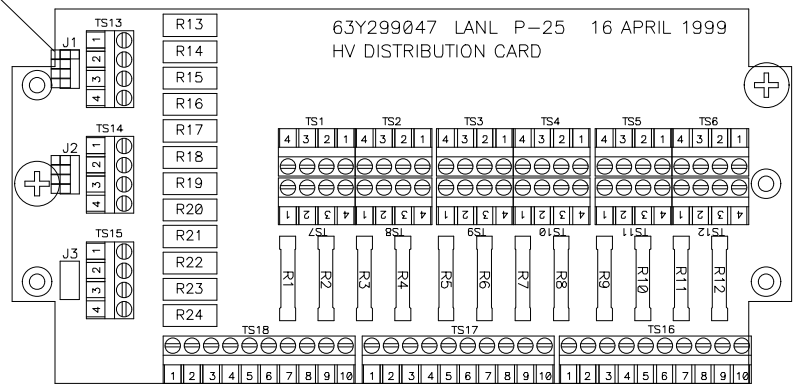

PC Card Assembly Notes

.

1 .Assemble and solder per IPC –6012 Class II

.

2. Apply acrylic conformal coating on all exposed solder joints on bottom side of card and on R1–R8 on top side

.

3. Do not istall the following components:
R9–12, R21–24, TS5, 6, 11, 12, 15, & 18, J3

..

Board Assembly Drawing

Los Alamos National Laboratory	
Title	MUON TRACKING HV DIST. SYSTEM
	STATION 3 SOUTH
Size C	Date Originated: 25 FEB 1998
	Date Last Revised: 26 June 00
LANL DWG # 63Y299047S3	Approved By: W. Sondheim
PHENIX DWG #:105-0312-0225	Drawn by: G. Hart , P-25
Filename 299047S3.pcb	Sheet of

ITEM REF #	QTY	MANUFACTURER	DESCRIPTION	PART #	Source	Cat #	Cost/ea
1	1	O-Z/ Gedney	Connector, Strain Releif, Grip Tite Type SR	SR-100-875	Summit Electric	OZSR100875	3.66
2	1	O-Z/ Gedney	Connector, Strain Releif, Grip Tite Type SR	SR-50-375	Summit Electric	OZSR50375	2.31
3	2	Micro Plastics, inc	Screw, Phillips head, M6 x 8, 1 mm pitch, Plastic	50M060100N008	Barnhill Bolt	1941-M6-M8-7A00	.35
4	2	Micro Plastics, inc	Washer, M6, plastic	16M06012150	Barnhill Bolt	1926-M6-A-7	.39

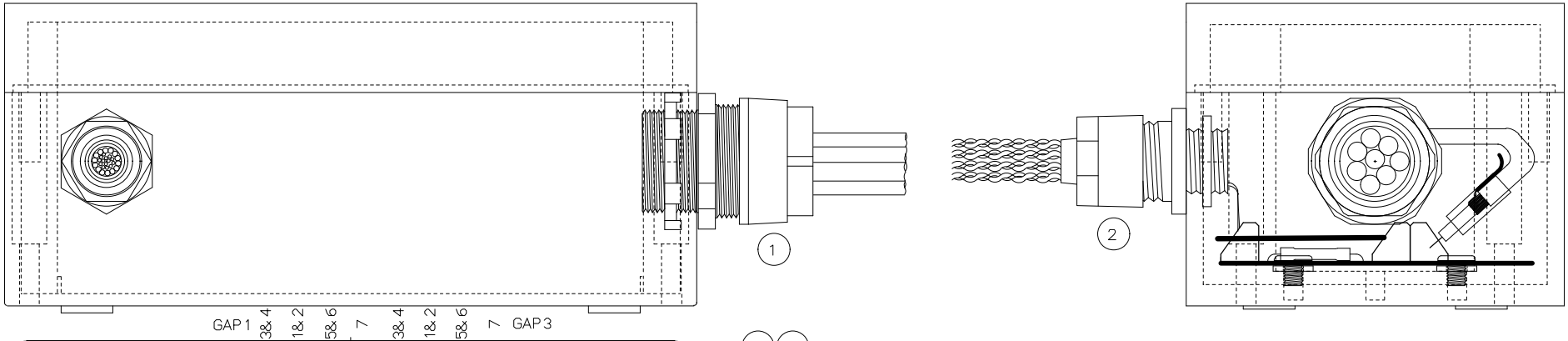

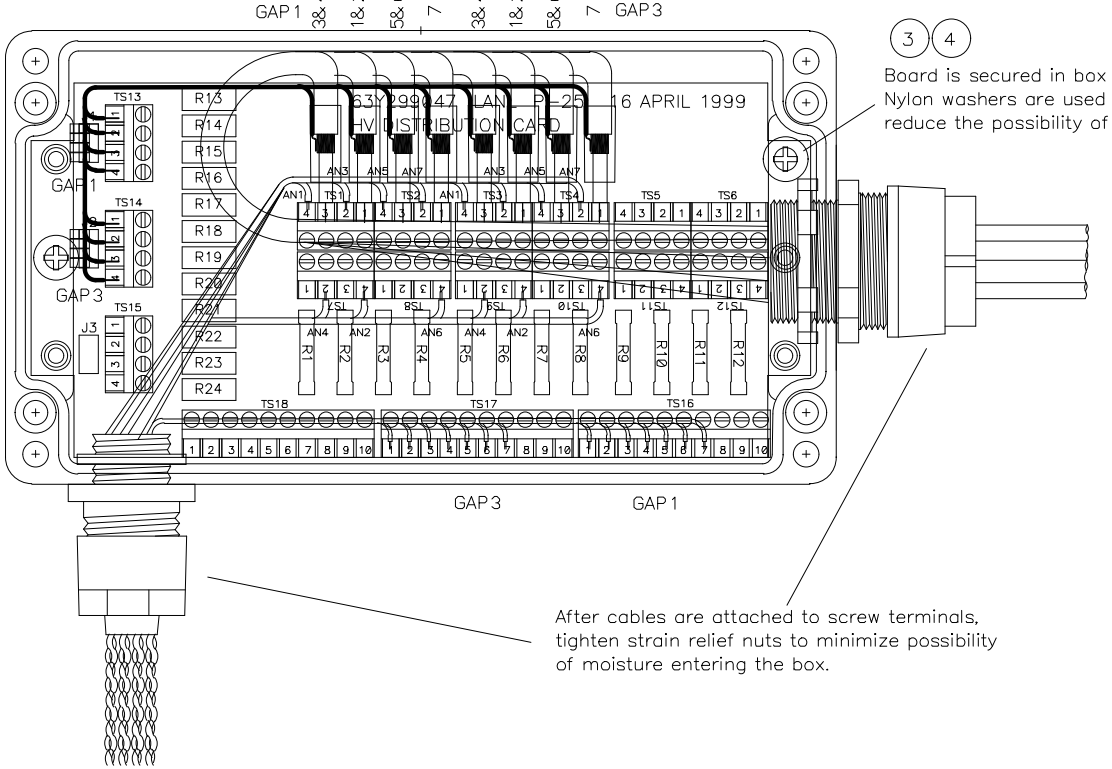

3 4

Board is secured in box with 2 nylon screws. Nylon washers are used under the board to reduce the possibility of HV leakage currents.

After cables are attached to screw terminals, tighten strain relief nuts to minimize possibility of moisture entering the box.

PCB & Cable Installation Assembly Drawing

Los Alamos National Laboratory	
Title	MUON TRACKING HV DIST. SYSTEM
	STATION 3 SOUTH
Size C	Date Originated: 25 FEB 1998
	Date Last Revised: 31 May 00
LANL DWG # 63Y299047S3	Approved By: W. Sondheim
PHENIX DWG #:105-0312-0225	Drawn by: G. Hart , P-25
Filename 299047S3.pcb	Sheet of

Box shown with lid installed

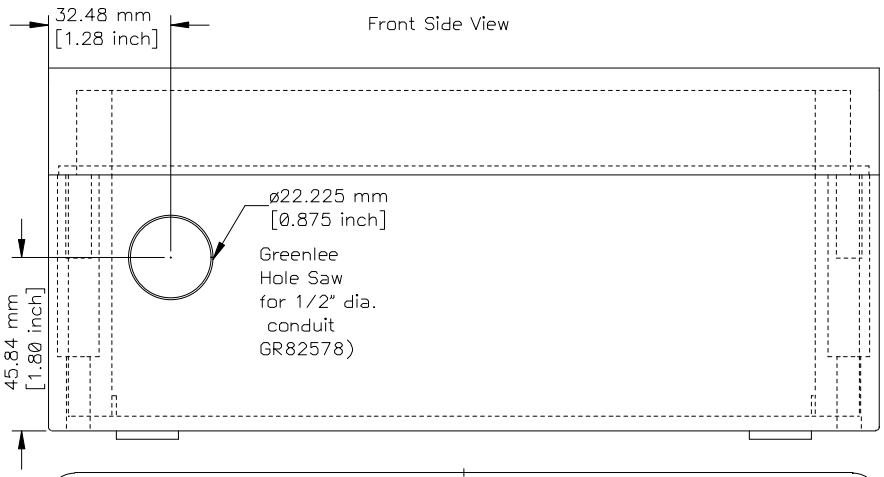

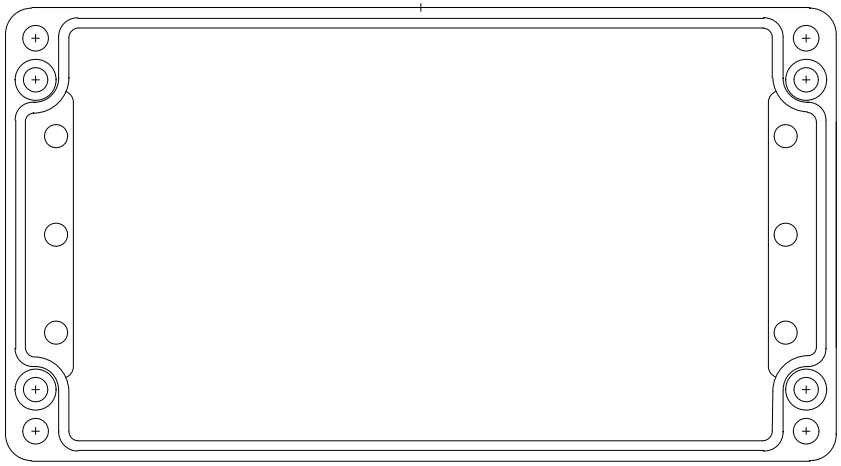

Top View

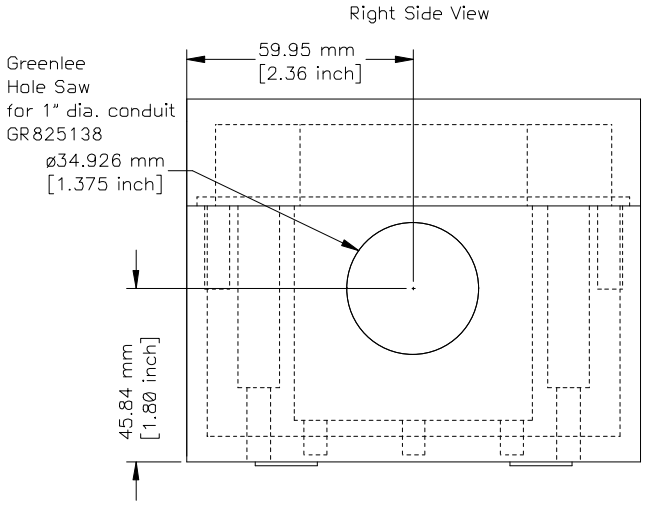

Box Fabrication Drawing

Los Alamos National Laboratory		
Title	MUON TRACKING HV DIST. SYSTEM	
STATION 3 SOUTH		
Size C	Date Originated: 25 FEB 1998	
	Date Last Revised: 26 June 00	
LANL DWG # 63Y299047S3		Approved By: W. Sondheim
PHENIX DWG #:105-0312-0225		Drawn by: G. Hart , P-25
Filename 299047S3.pcb		Sheet of

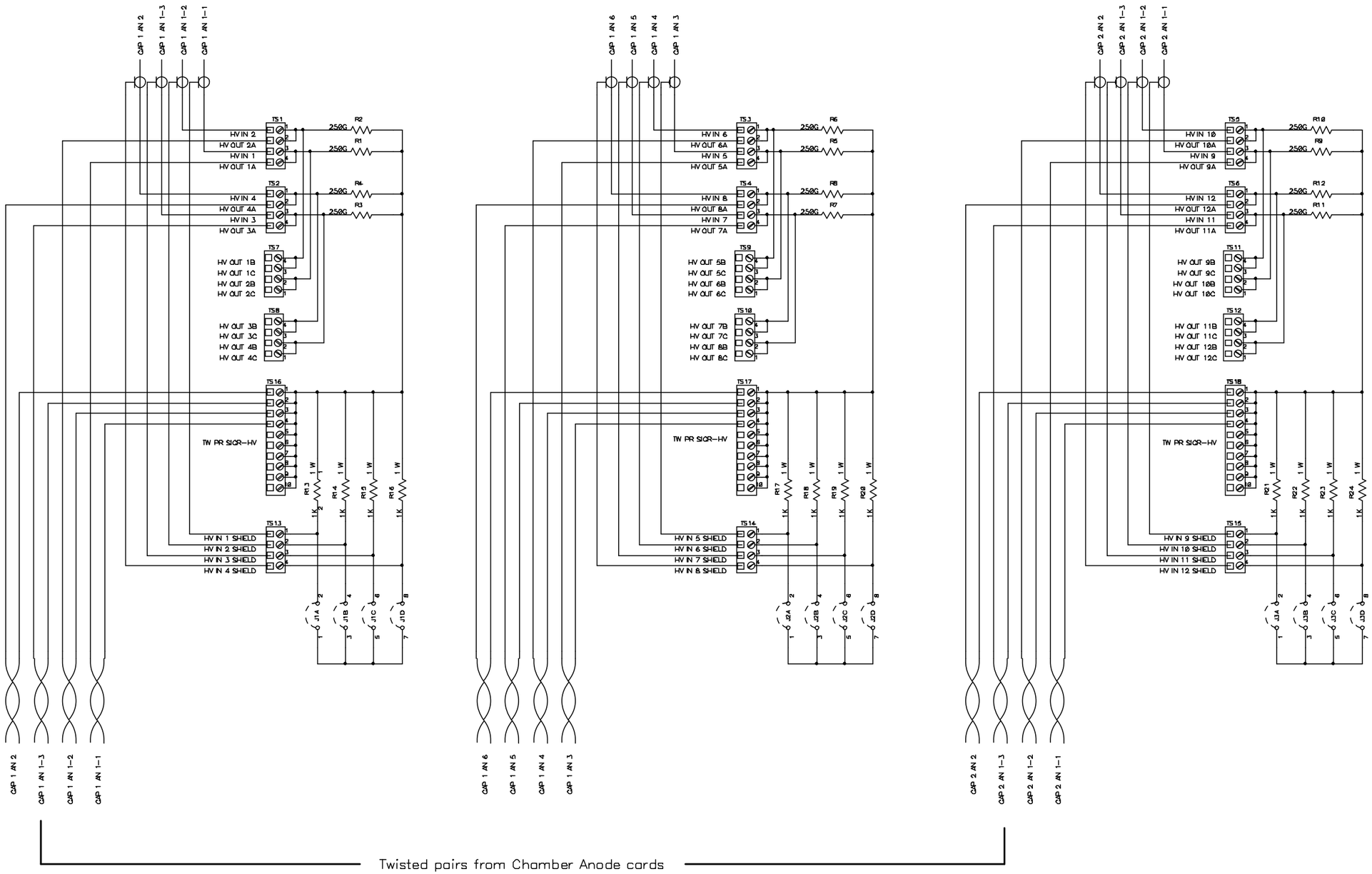

Los Alamos National Laboratory		
Title: MUON TRACKING HV DIST BOX 1 South		
SCHEMATIC OCTANT 1 GAPs 1-2		
Size C	Date Originated: 14 April 1999	
	Last Revised: 16 Nov 2000	
LANL DWG #: 63Y299047A		Approved By:W. Sondheim
PHENIX #: 105-0312-221		Drawn by: G. Hart , P-25
Filename: ST 1 S HV DIST BOX.sch		Sheet 1 of 16

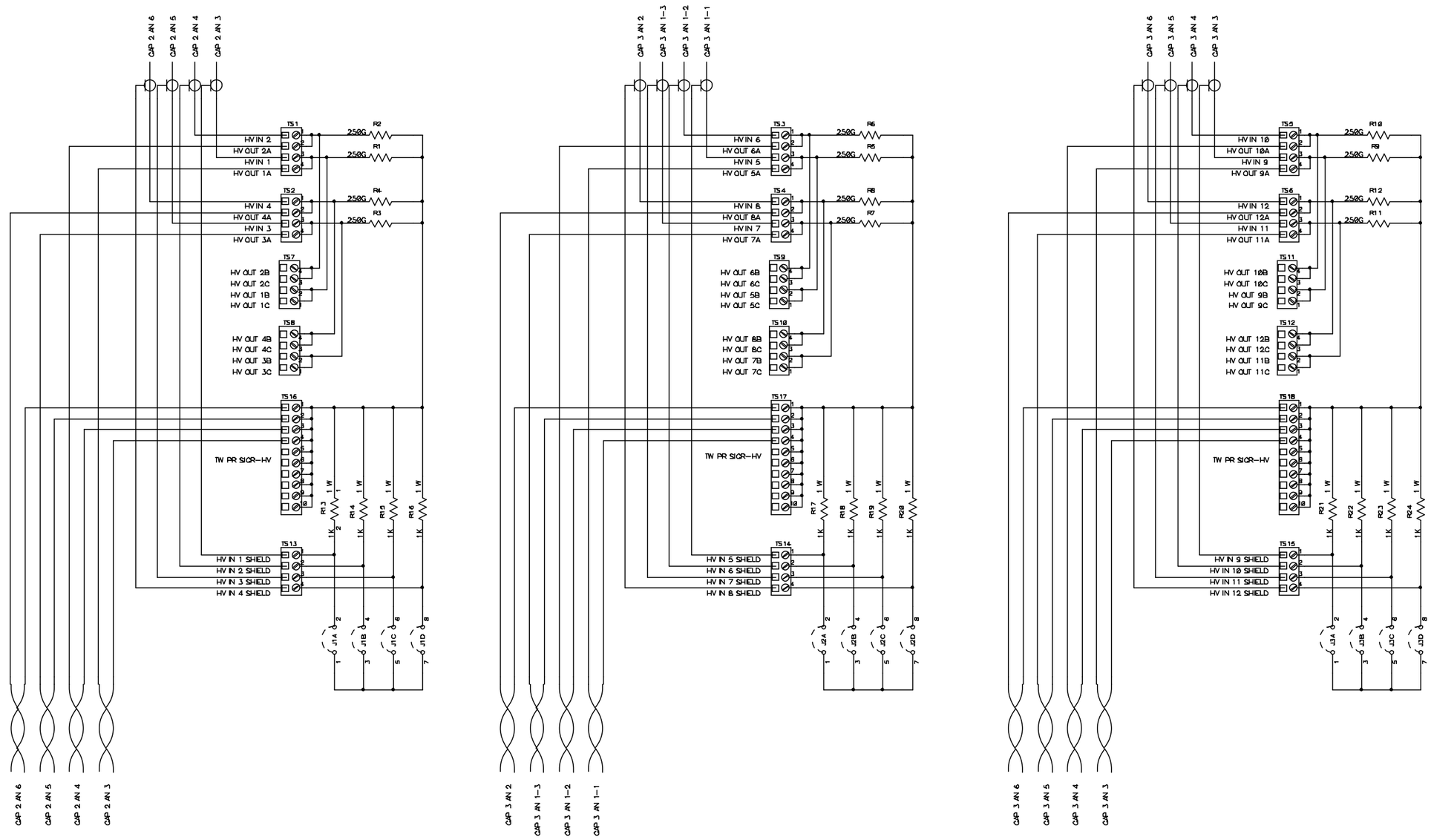

Los Alamos National Laboratory		
Title: MUON TRACKING HV DIST BOX 1 South		
SCHEMATIC OCTANT 1 GAPS 2-3		
Size C	Date Originated: 14 April 1999	
	Last Revised: 16 Nov 2000	
LANL DWG #: 63Y299047A		Approved By:W. Sondheim
PHENIX #: 105-0312-221		Drawn by: G. Hart , P-25
Filename: ST 1 S HV DIST BOX.sch		Sheet 2 of 16

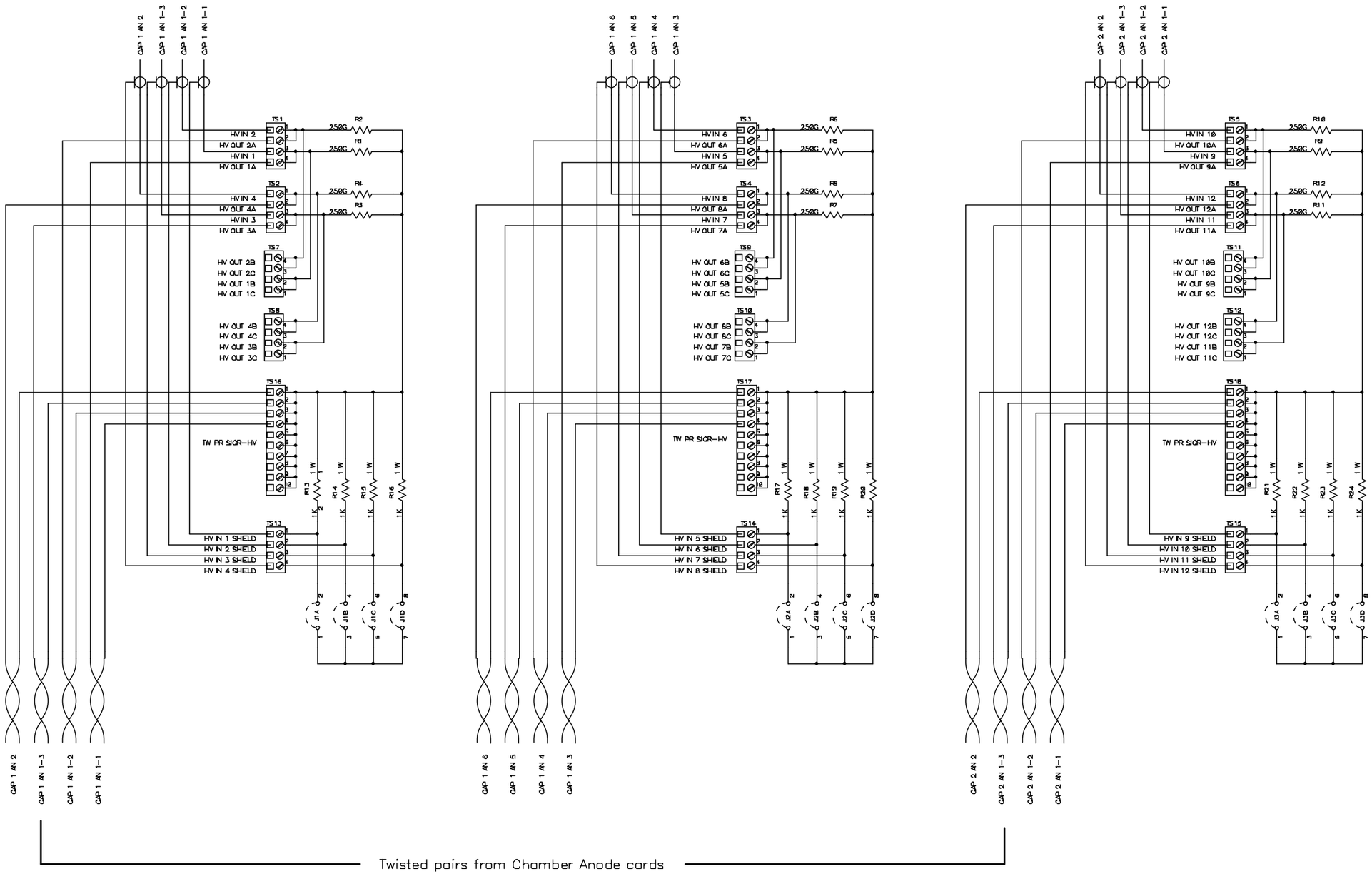

Los Alamos National Laboratory		
Title: MUON TRACKING HV DIST BOX 1 South		
SCHEMATIC OCTANT 2 GAPs 1-2		
Size	Date Originated: 14 April 1999	
	Last Revised: 16 Nov 2000	
LANL DWG #: 63Y299047A		Approved By:W. Sondheim
PHENIX #: 105-0312-221		Drawn by: G. Hart , P-25
Filename: ST 1 S HV DIST BOX.sch		Sheet 3 of 16

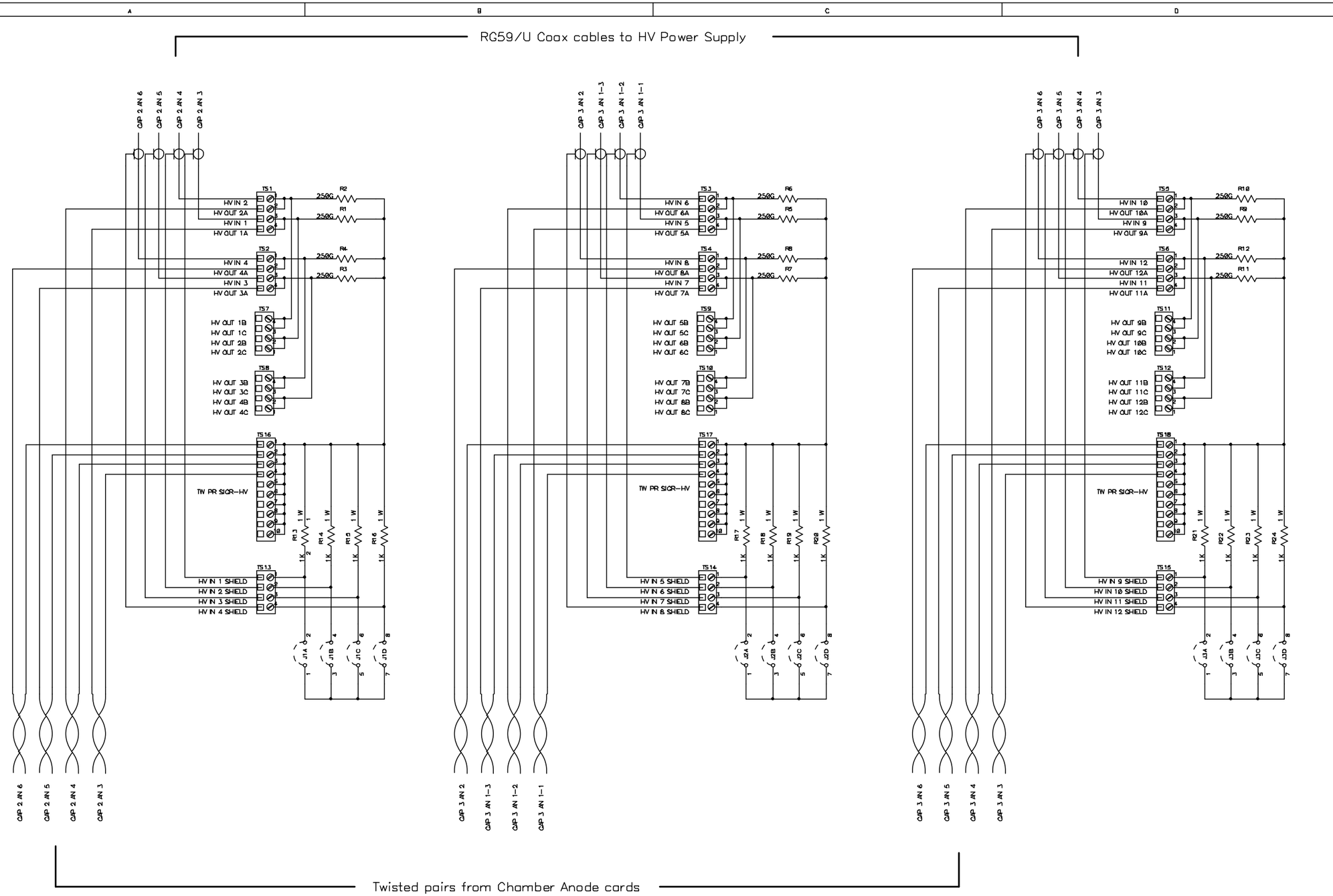

Los Alamos National Laboratory		
Title: MUON TRACKING HV DIST BOX 1 South		
SCHEMATIC OCTANT 2 GAPS 2-3		
Size C	Date Originated: 14 April 1999	
	Last Revised: 16 Nov 2000	
LANL DWG #: 63Y299047A		Approved By: W. Sondheim
PHENIX #: 105-0312-221		Drawn by: G. Hart , P-25
Filename: ST 1 S HV DIST BOX.sch		Sheet 4 of 16

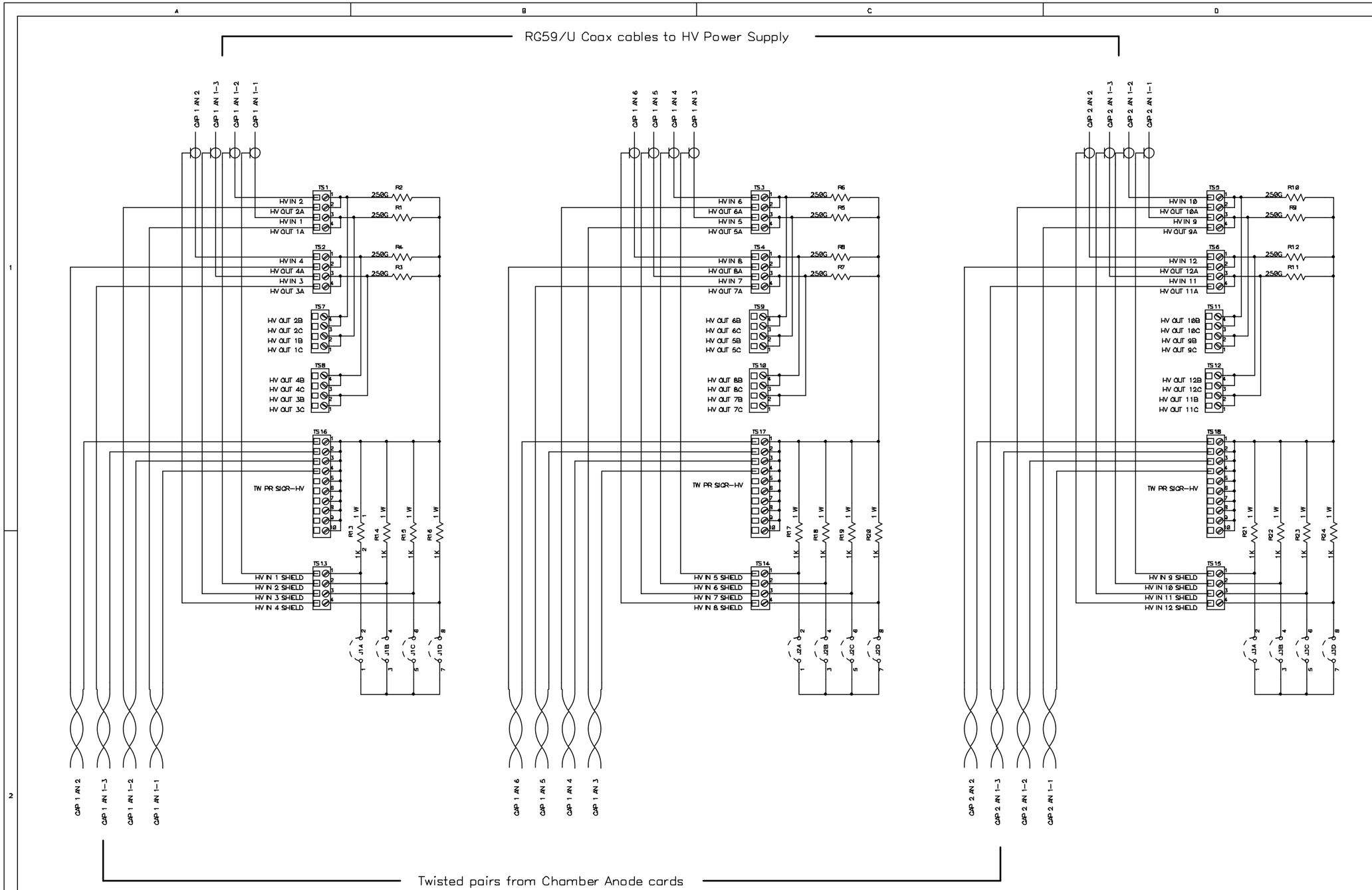

Los Alamos National Laboratory		
Title: MUON TRACKING HV DIST BOX 1 South		
SCHEMATIC OCTANT 3 GAPs 1-2		
Size	Date Originated: 14 April 1999	
	Last Revised: 16 Nov 2000	
LANL DWG #: 63Y299047A		Approved By:W. Sondheim
PHENIX #: 105-0312-221		Drawn by: G. Hart , P-25
Filename: ST 1 S HV DIST BOX.sch		Sheet 5 of 16

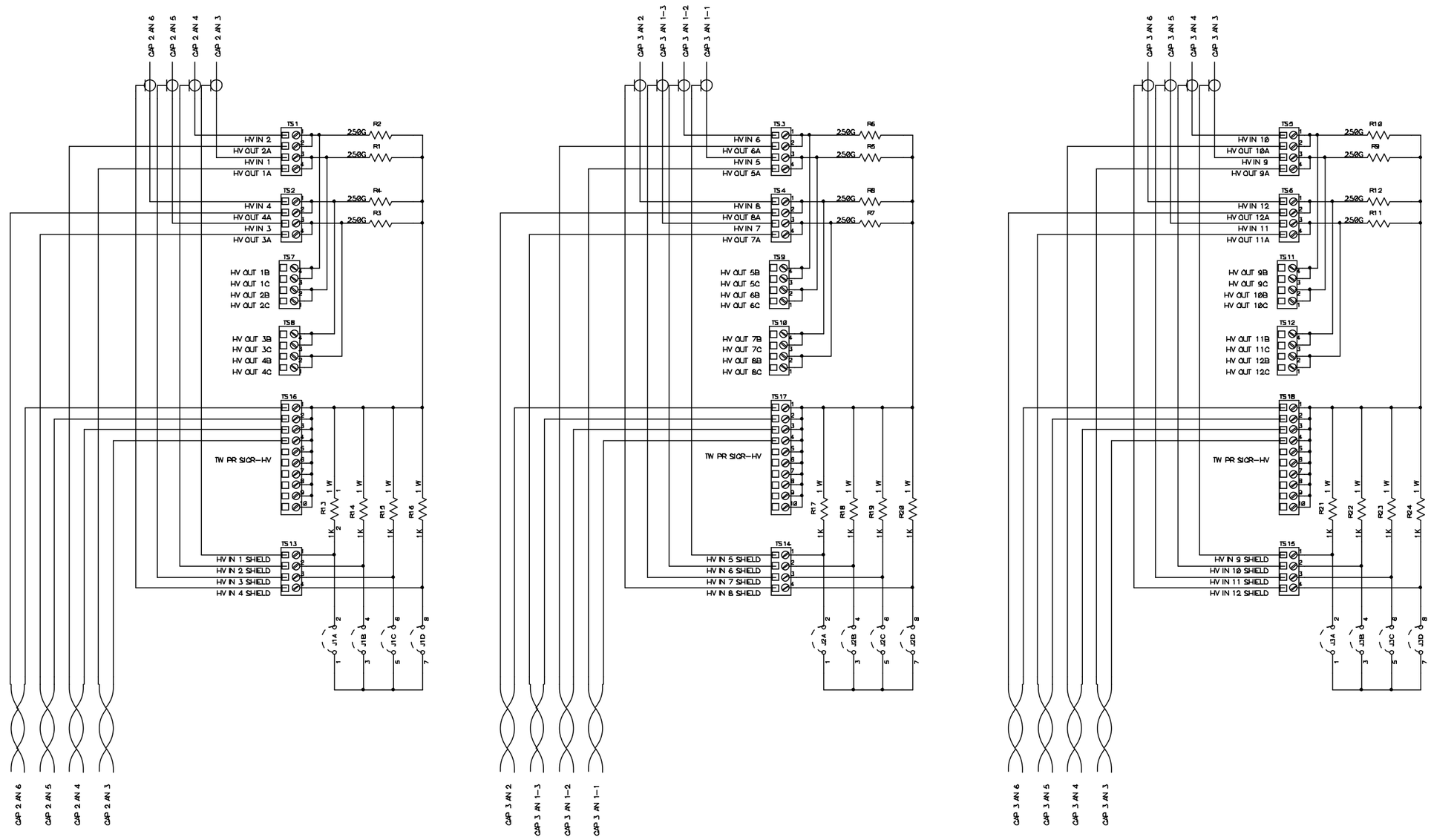

Los Alamos National Laboratory		
Title: MUON TRACKING HV DIST BOX 1 South		
SCHEMATIC OCTANT 3 GAPS 2-3		
Size C	Date Originated: 14 April 1999	
	Last Revised: 16 Nov 2000	
LANL DWG #: 63Y299047A		Approved By:W. Sondheim
PHENIX #: 105-0312-221		Drawn by: G. Hart , P-25
Filename: ST 1 S HV DIST BOX.sch		Sheet 6 of 16

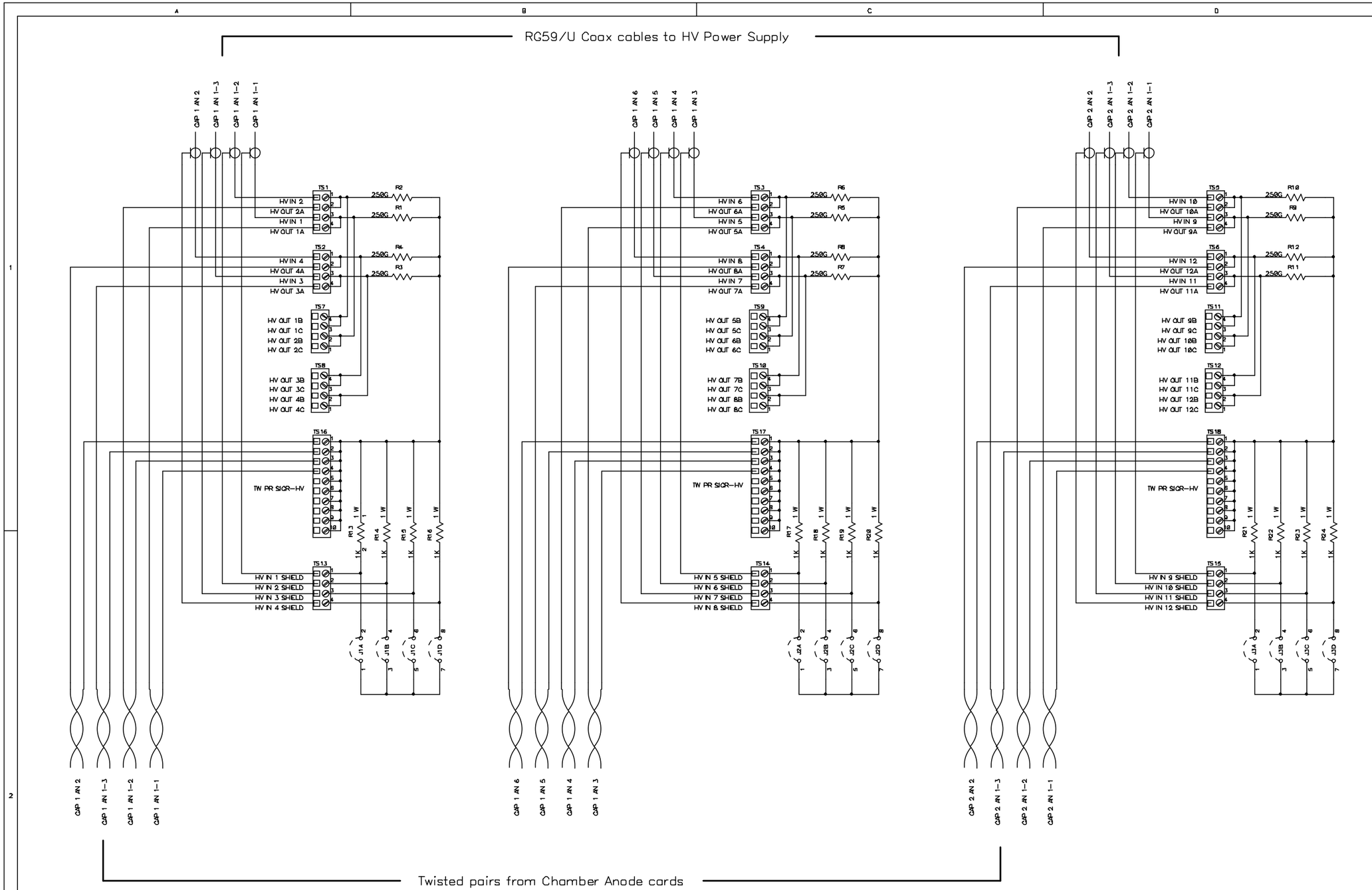

Los Alamos National Laboratory	
Title: MUON TRACKING HV DIST BOX 1 South	
SCHEMATIC OCTANT 4 GAPs 1-2	
Size	Date Originated: 14 April 1999
	Last Revised: 16 Nov 2000
LANL DWG #: 63Y299047A	Approved By:W. Sondheim
PHENIX #: 105-0312-221	Drawn by: G. Hart , P-25
Filename: ST 1 S HV DIST BOX.sch	Sheet 7 of 16

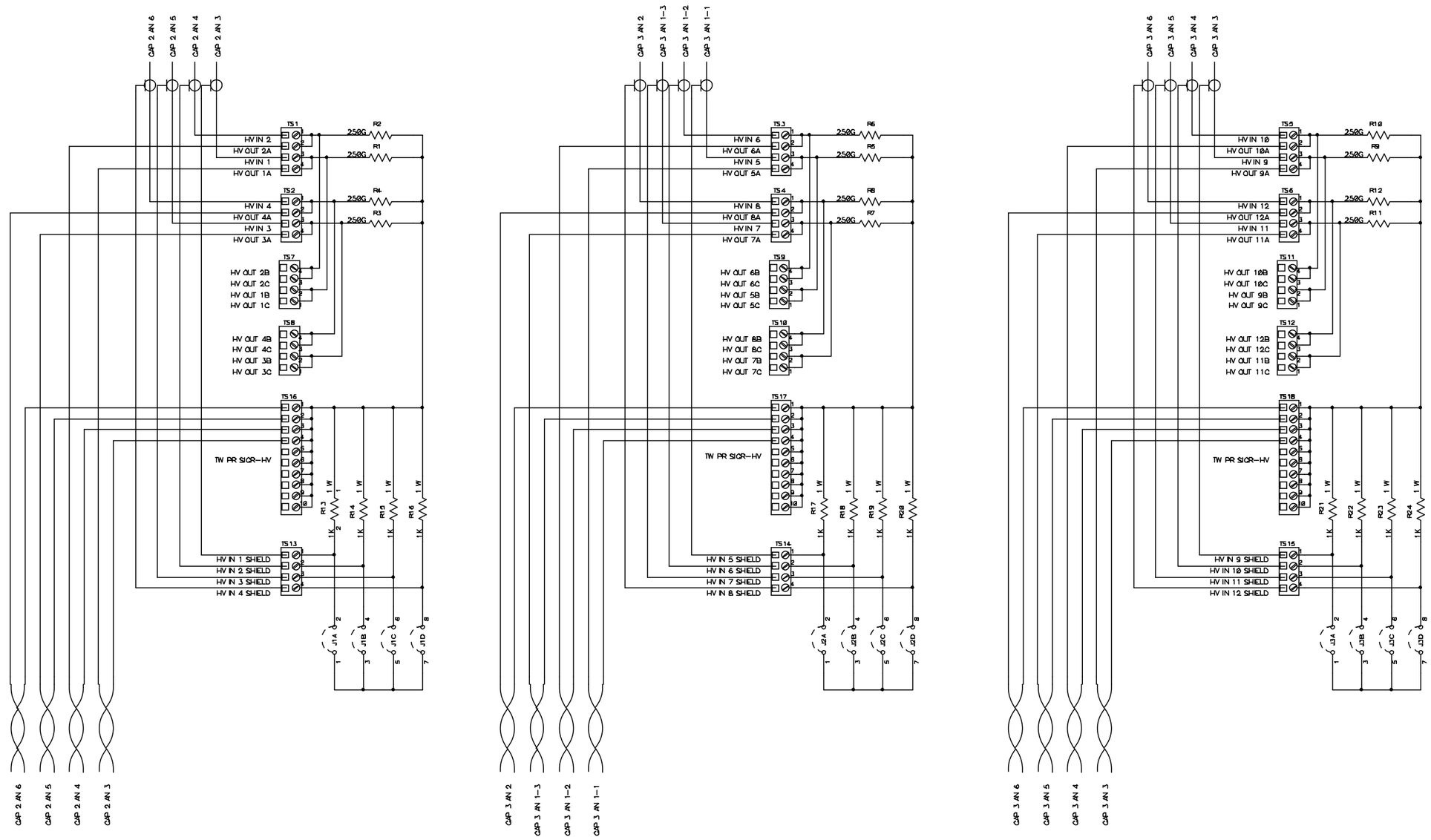

Los Alamos National Laboratory		
Title: MUON TRACKING HV DIST BOX 1 South		
SCHEMATIC OCTANT 4 GAPS 2-3		
Size C	Date Originated: 14 April 1999	
	Last Revised: 16 Nov 2000	
LANL DWG #: 63Y299047A		Approved By:W. Sondheim
PHENIX #: 105-0312-221		Drawn by: G. Hart , P-25
Filename: ST 1 S HV DIST BOX.sch		Sheet 8 of 16

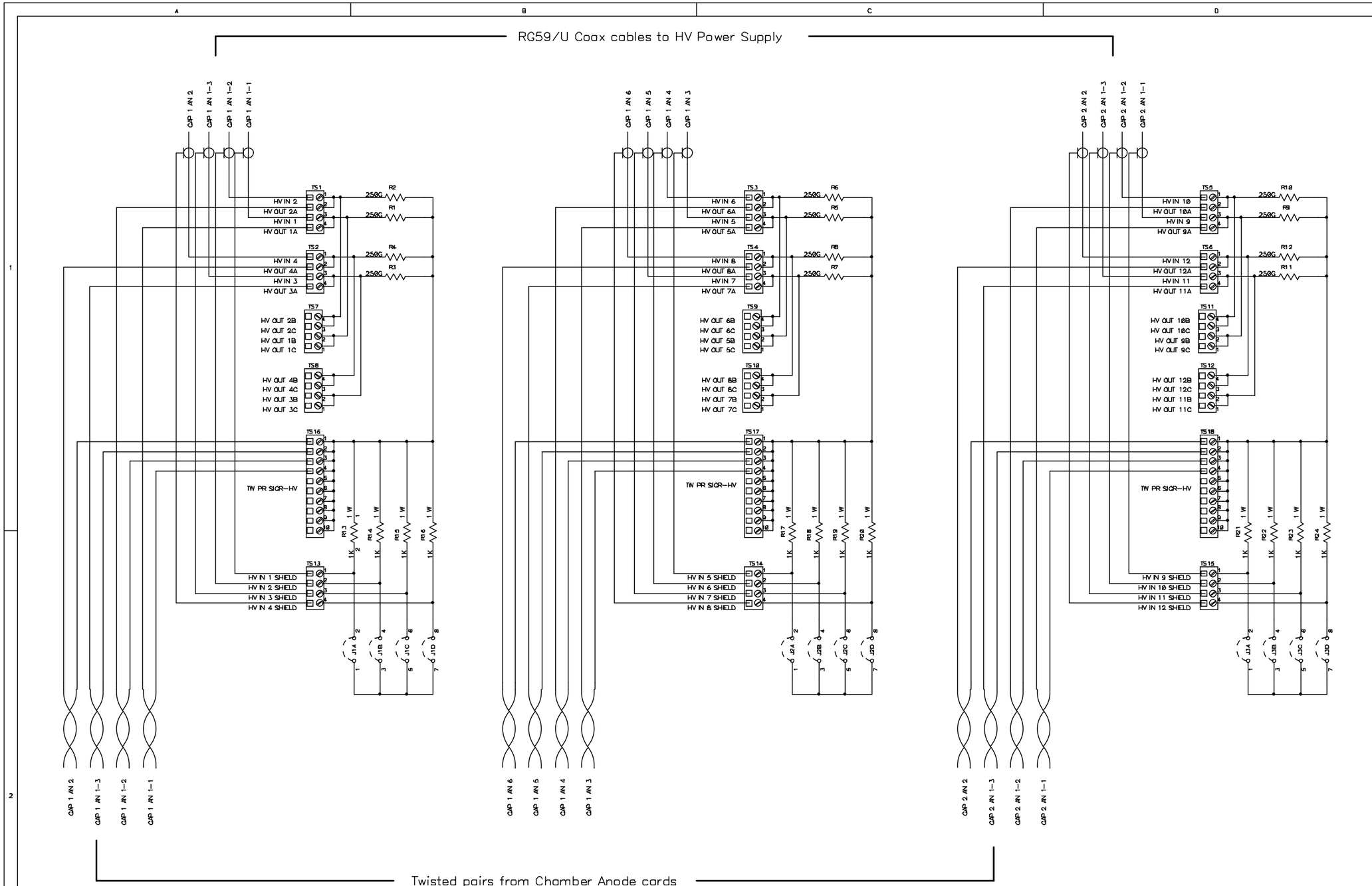

Los Alamos National Laboratory		
Title: MUON TRACKING HV DIST BOX 1 South		
SCHEMATIC OCTANT 5 GAPs 1-2		
Size	Date Originated: 14 April 1999	
	Last Revised: 16 Nov 2000	
LANL DWG #: 63Y299047A		Approved By:W. Sondheim
PHENIX #: 105-0312-221		Drawn by: G. Hart , P-25
Filename: ST 1 S HV DIST BOX.sch		Sheet 9 of 16

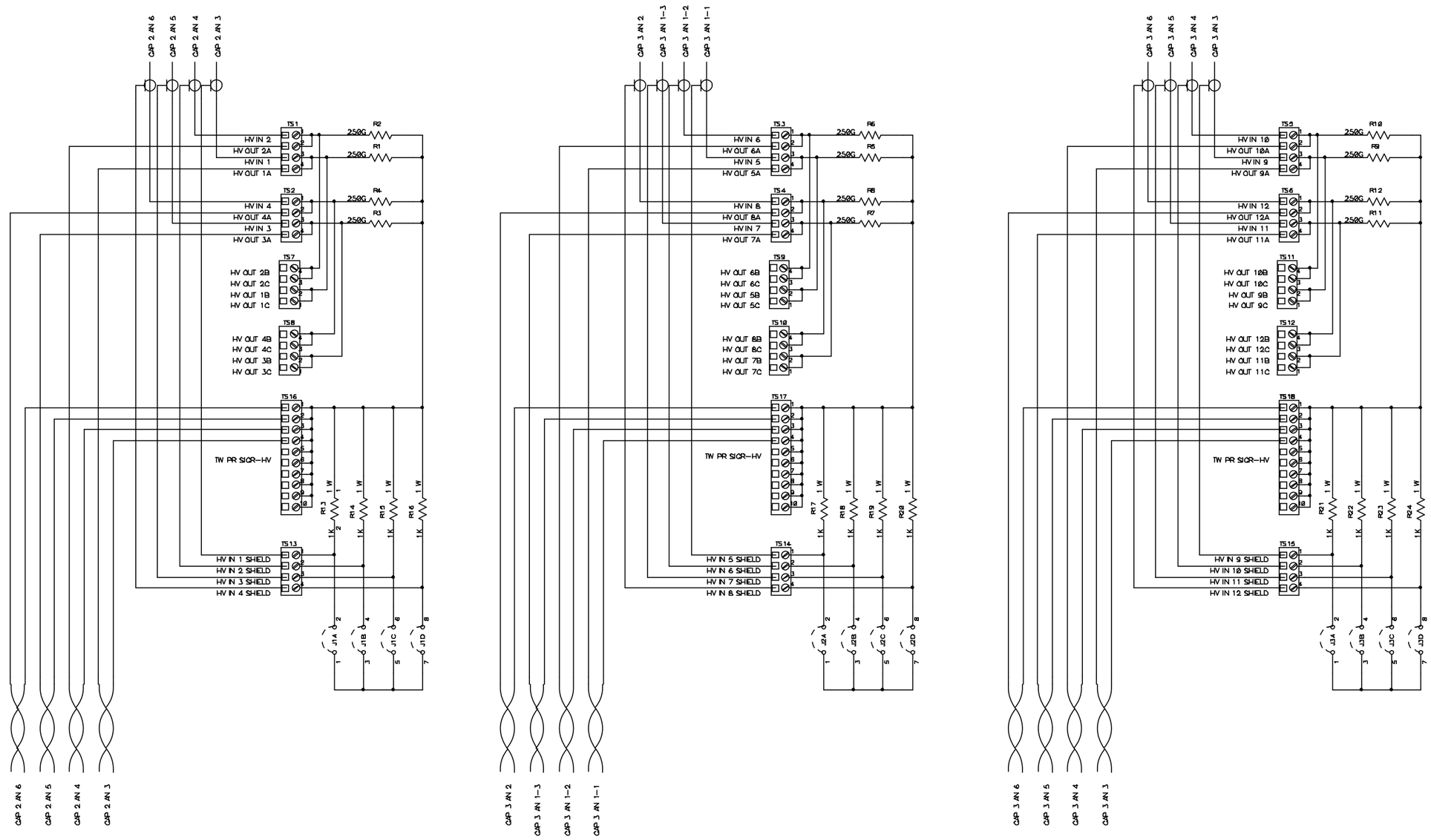

Los Alamos National Laboratory		
Title: MUON TRACKING HV DIST BOX 1 South		
SCHEMATIC OCTANT 5 GAPS 2-3		
Size C	Date Originated: 14 April 1999	
	Last Revised: 16 Nov 2000	
LANL DWG #: 63Y299047A		Approved By:W. Sondheim
PHENIX #: 105-0312-221		Drawn by: G. Hart , P-25
Filename: ST 1 S HV DIST BOX.sch		Sheet 10 of 16

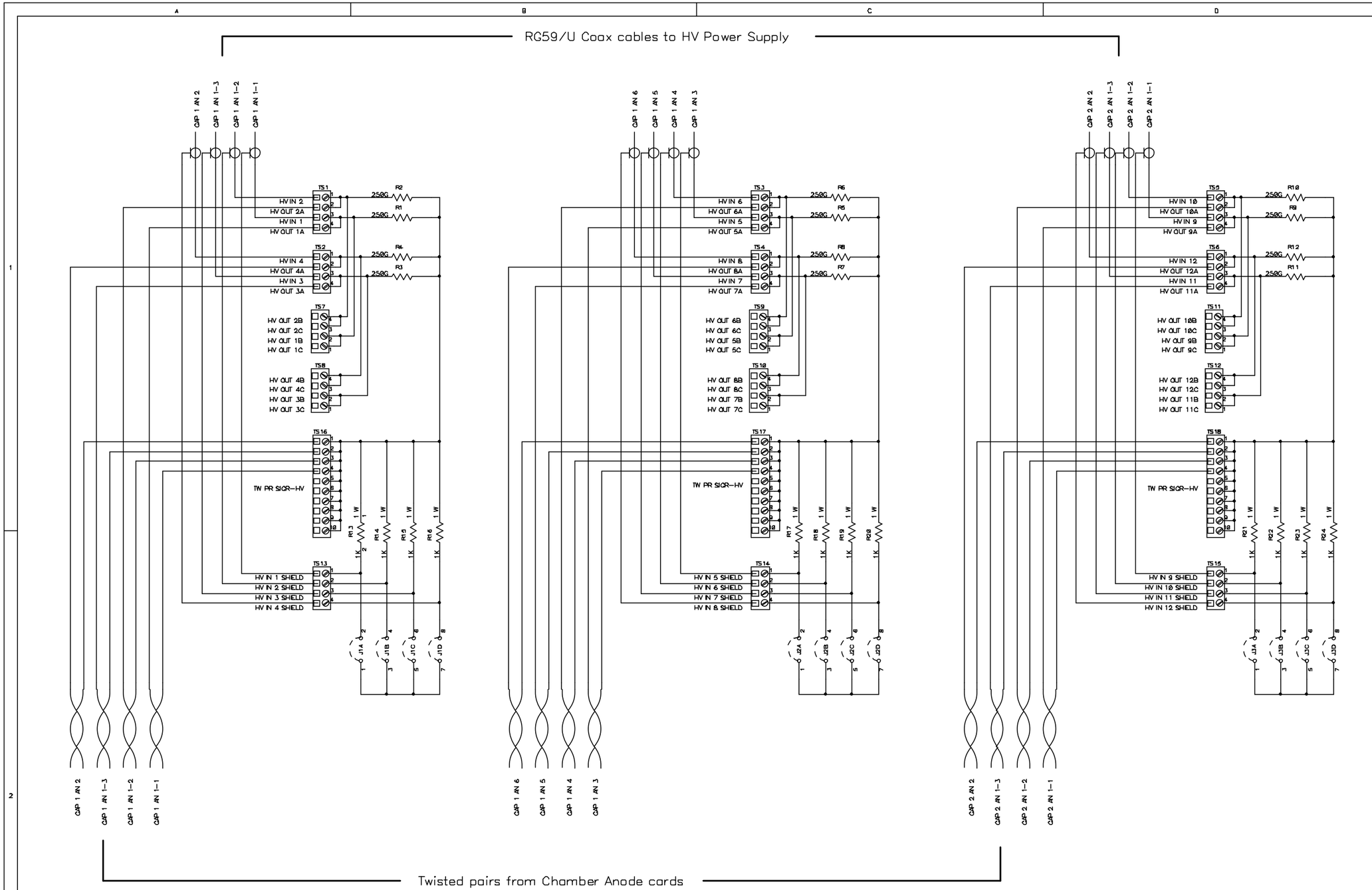

Los Alamos National Laboratory		
Title: MUON TRACKING HV DIST BOX 1 South		
SCHEMATIC OCTANT 6 GAPs 1-2		
Size C	Date Originated: 14 April 1999	
	Last Revised: 16 Nov 2000	
LANL DWG #: 63Y299047A		Approved By:W. Sondheim
PHENIX #: 105-0312-221		Drawn by: G. Hart , P-25
Filename: ST 1 S HV DIST BOX.sch		Sheet 11 of 16

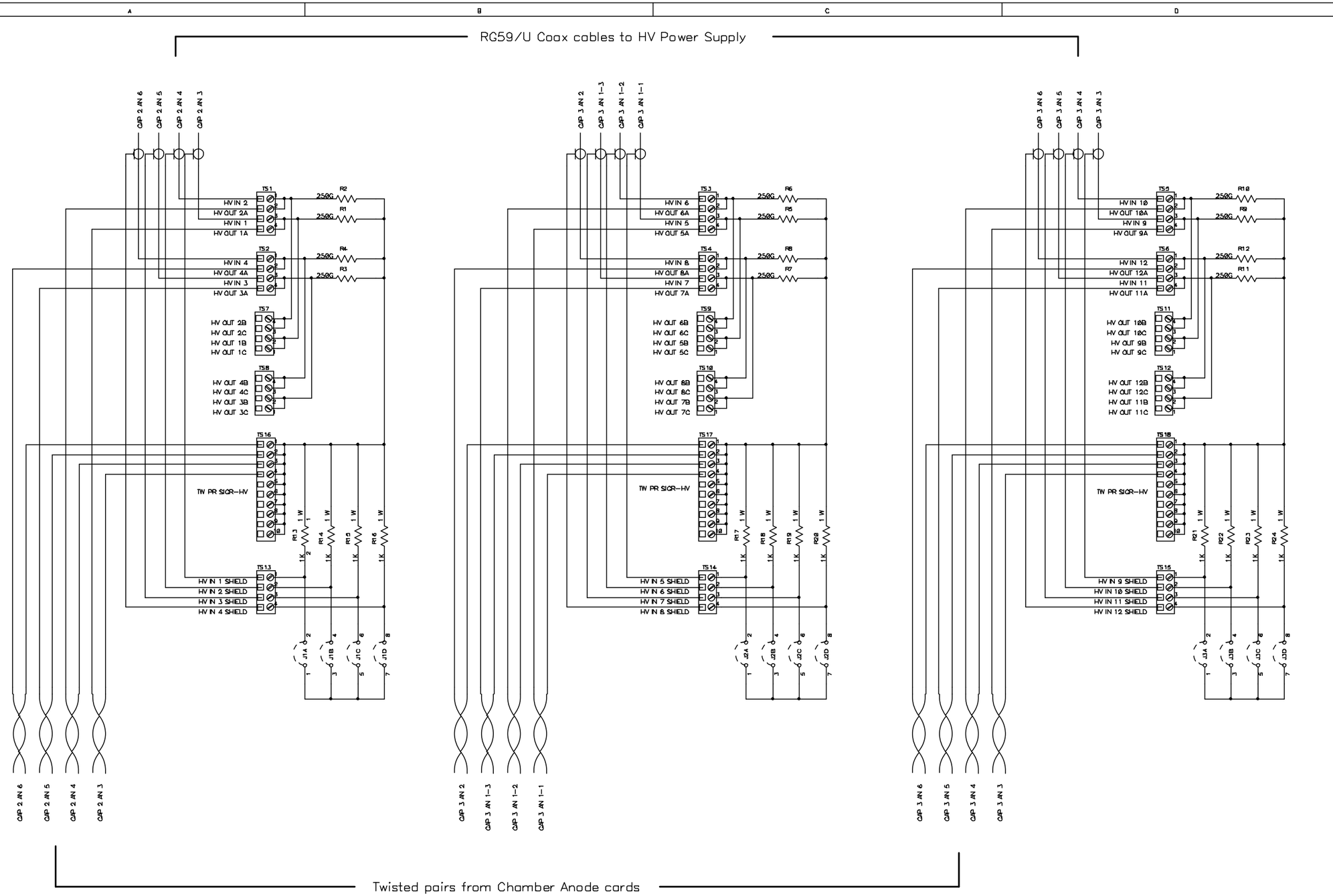

Los Alamos National Laboratory		
Title: MUON TRACKING HV DIST BOX 1 South		
SCHEMATIC OCTANT 6 GAPS 2-3		
Size C	Date Originated: 14 April 1999	
	Last Revised: 16 Nov 2000	
LANL DWG #: 63Y299047A		Approved By:W. Sondheim
PHENIX #: 105-0312-221		Drawn by: G. Hart , P-25
Filename: ST 1 S HV DIST BOX.sch		Sheet 12 of 16

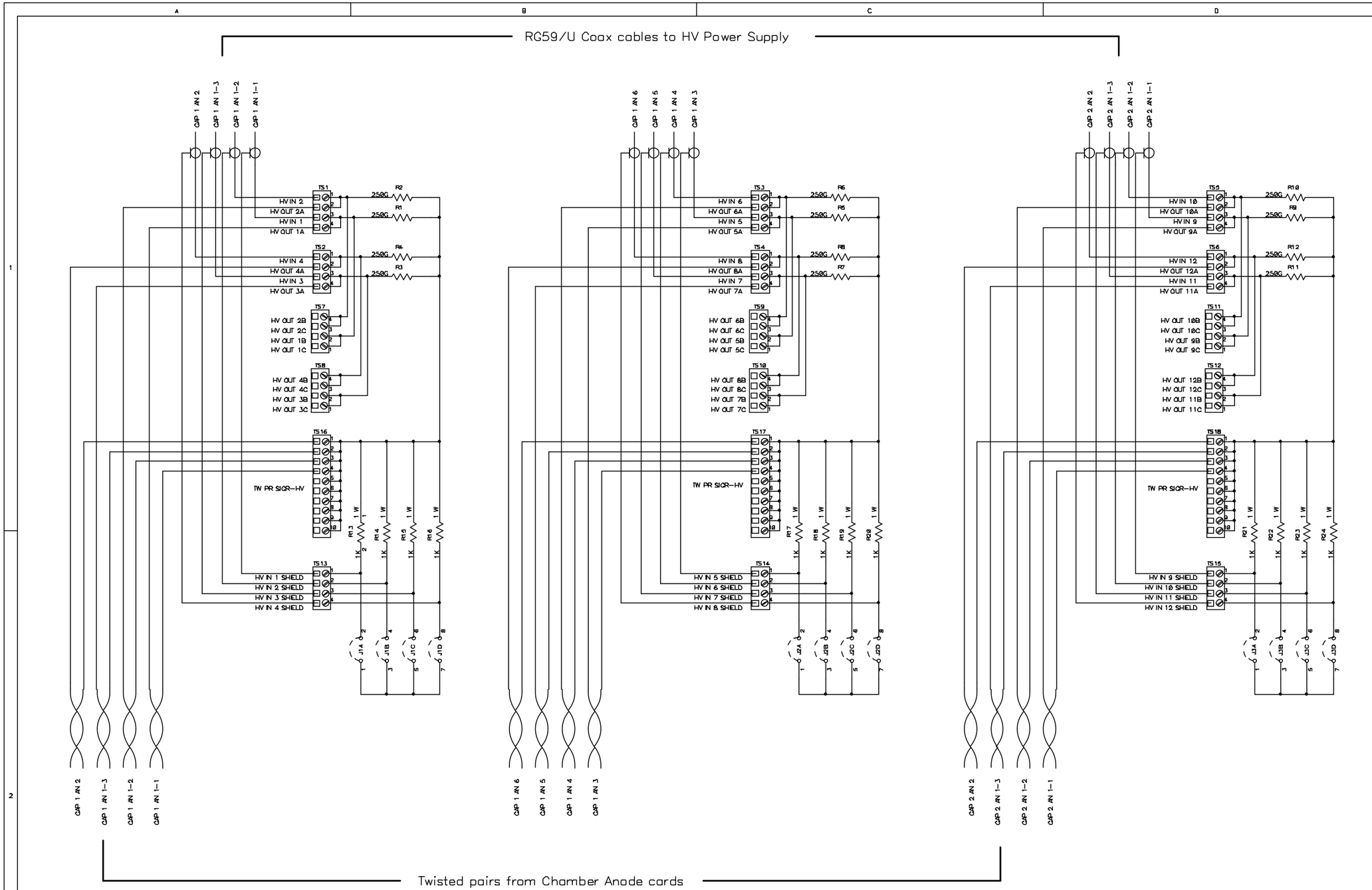

Los Alamos National Laboratory		
Title: MUON TRACKING HV DIST BOX 1 South		
SCHEMATIC OCTANT 7 GAPs 1-2		
Size	Date Originated: 14 April 1999	
	Last Revised: 16 Nov 2000	
LANL DWG #: 63Y299047A		Approved By:W. Sondheim
PHENIX #: 105-0312-221		Drawn by: G. Hart , P-25
Filename: ST 1 S HV DIST BOX.sch		Sheet 13 of 16

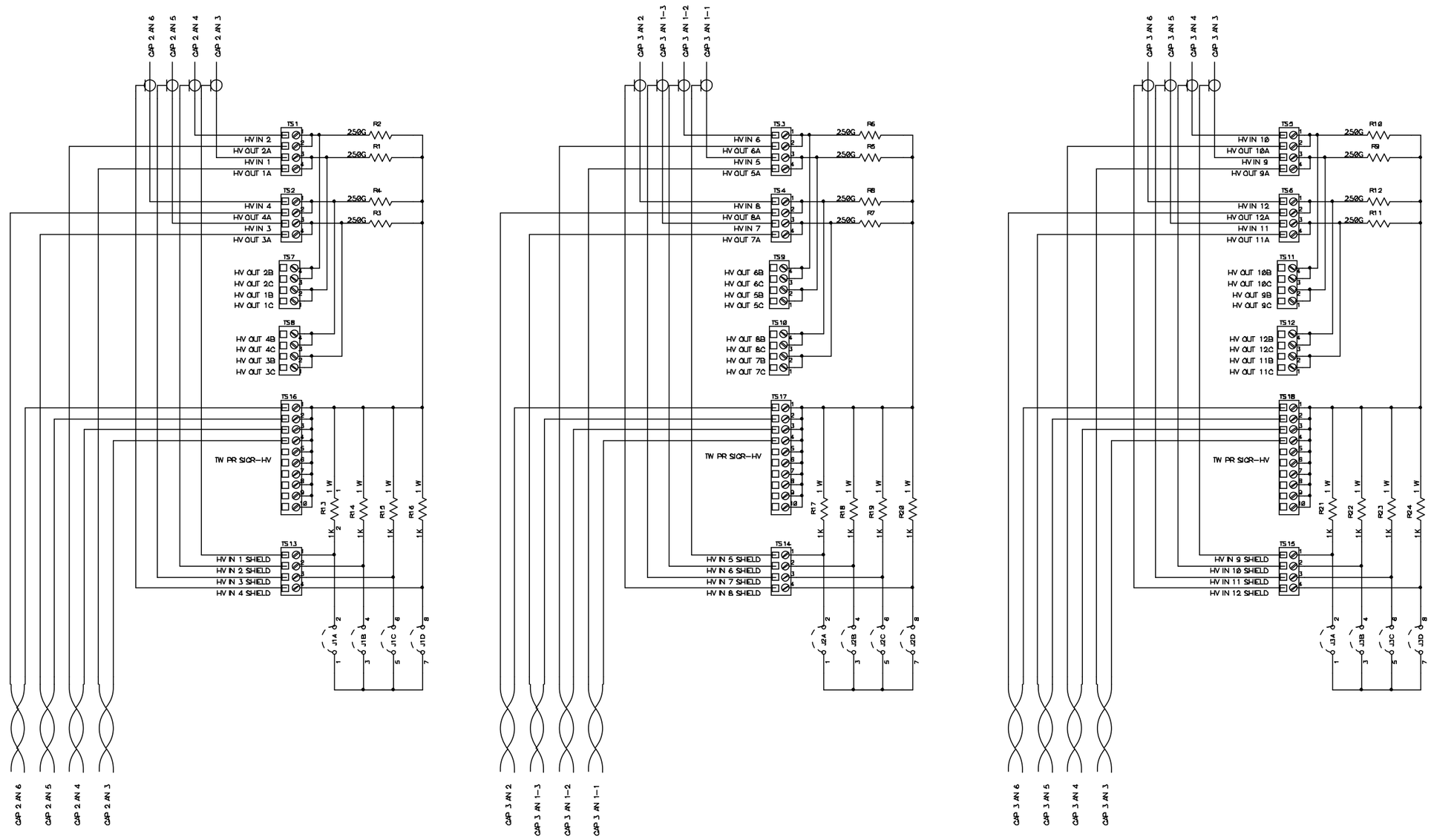

Los Alamos National Laboratory		
Title: MUON TRACKING HV DIST BOX 1 South		
SCHEMATIC OCTANT 7 GAPS 2-3		
Size C	Date Originated: 14 April 1999	
	Last Revised: 16 Nov 2000	
LANL DWG #: 63Y299047A		Approved By:W. Sondheim
PHENIX #: 105-0312-221		Drawn by: G. Hart , P-25
Filename: ST 1 S HV DIST BOX.sch		Sheet 14 of 16

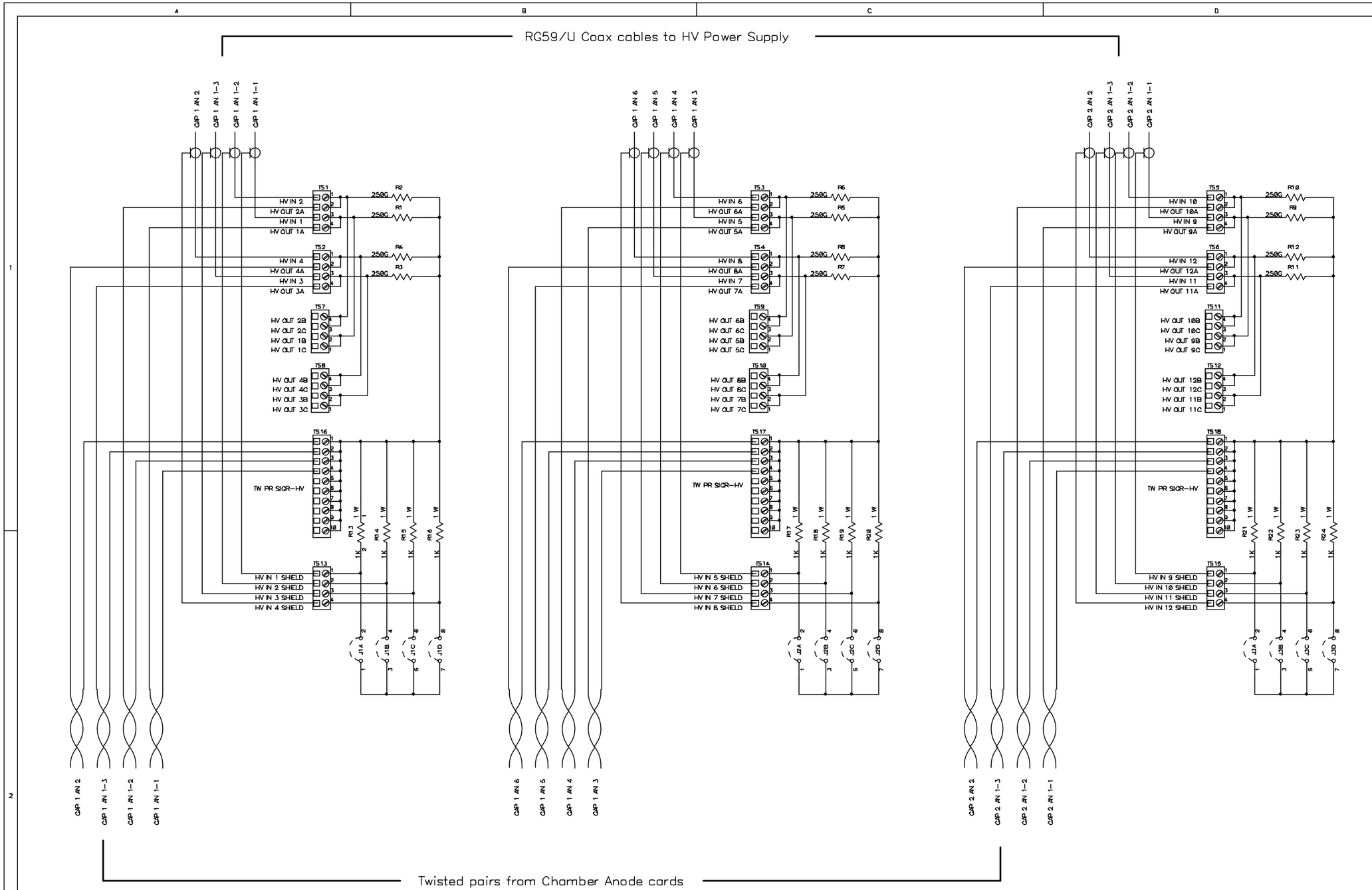

Los Alamos National Laboratory		
Title: MUON TRACKING HV DIST BOX 1 South		
SCHEMATIC OCTANT 8 GAPs 1-2		
Size	Date Originated: 14 April 1999	
	Last Revised: 16 Nov 2000	
LANL DWG #: 63Y299047A		Approved By:W. Sondheim
PHENIX #: 105-0312-221		Drawn by: G. Hart , P-25
Filename: ST 1 S HV DIST BOX.sch		Sheet 15 of 16

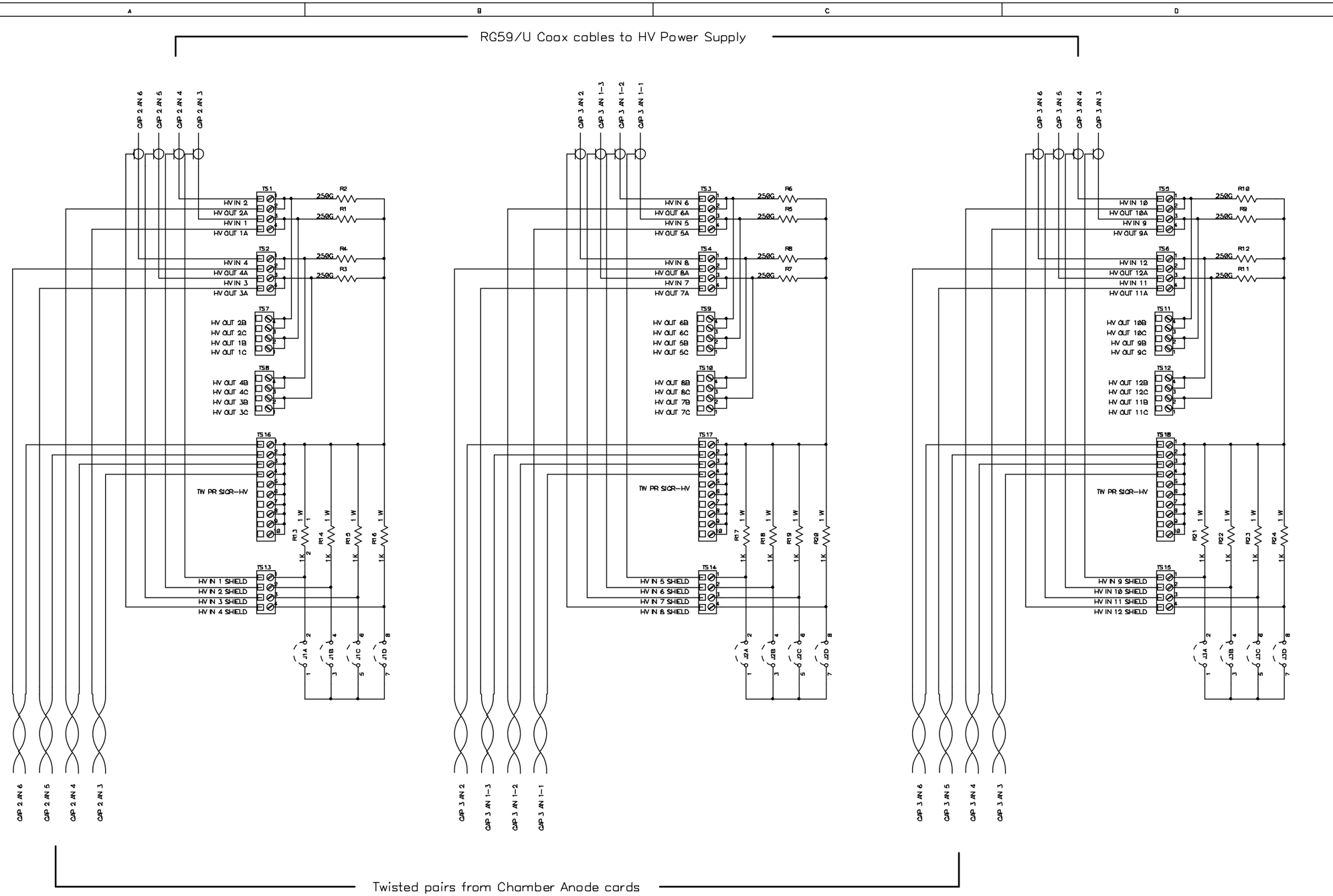

Los Alamos National Laboratory		
Title: MUON TRACKING HV DIST BOX 1 South		
SCHEMATIC OCTANT 8 GAPS 2-3		
Size C	Date Originated: 14 April 1999	
	Last Revised: 16 Nov 2000	
LANL DWG #: 63Y299047A		Approved By:W. Sondheim
PHENIX #: 105-0312-221		Drawn by: G. Hart , P-25
Filename: ST 1 S HV DIST BOX.sch		Sheet 16 of 16

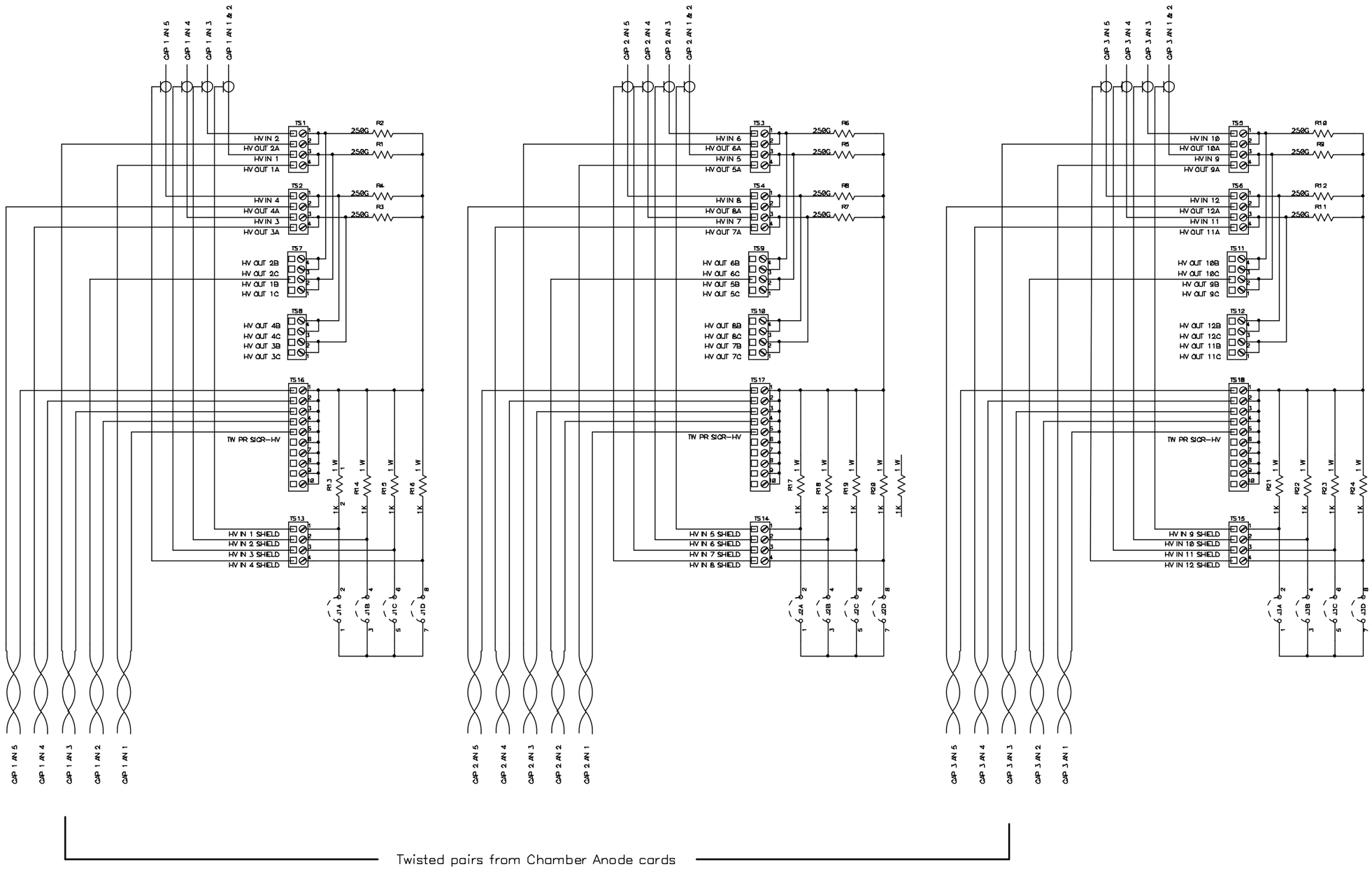

Los Alamos National Laboratory		
Title: MUON TRACKING HV DIST BOX 2 South		
SCHEMATIC OCTANT 1		
Size C	Date Originated: 14 April 1999	
	Last Revised: 16 Nov 2000	
LANL DWG #: 63Y299047A		Approved By:W. Sondheim
PHENIX #: 105-0312-223		Drawn by: G. Hart , P-25
Filename: ST 2 S HV DIST BOX.sch		Sheet 1 of 8

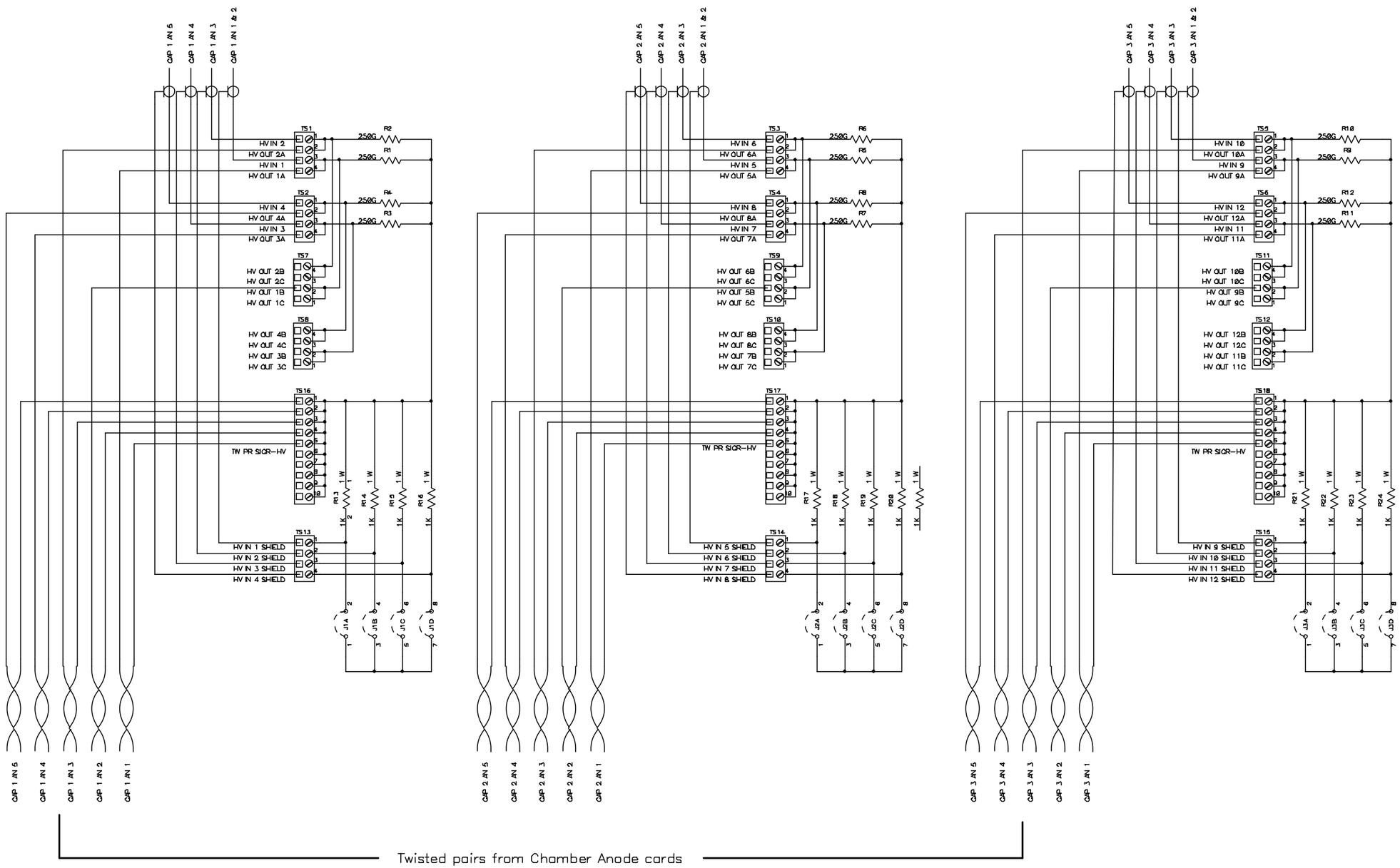

Los Alamos National Laboratory		
Title: MUON TRACKING HV DIST BOX 2 South		
SCHEMATIC OCTANT 2		
Size C	Date Originated: 14 April 1999	
	Last Revised: 16 Nov 2000	
LANL DWG #: 63Y299047A		Approved By: W. Sondheim
PHENIX #: 105-0312-223		Drawn by: G. Hart , P-25
Filename: ST 2 S HV DIST BOX.sch		Sheet 2 of 8

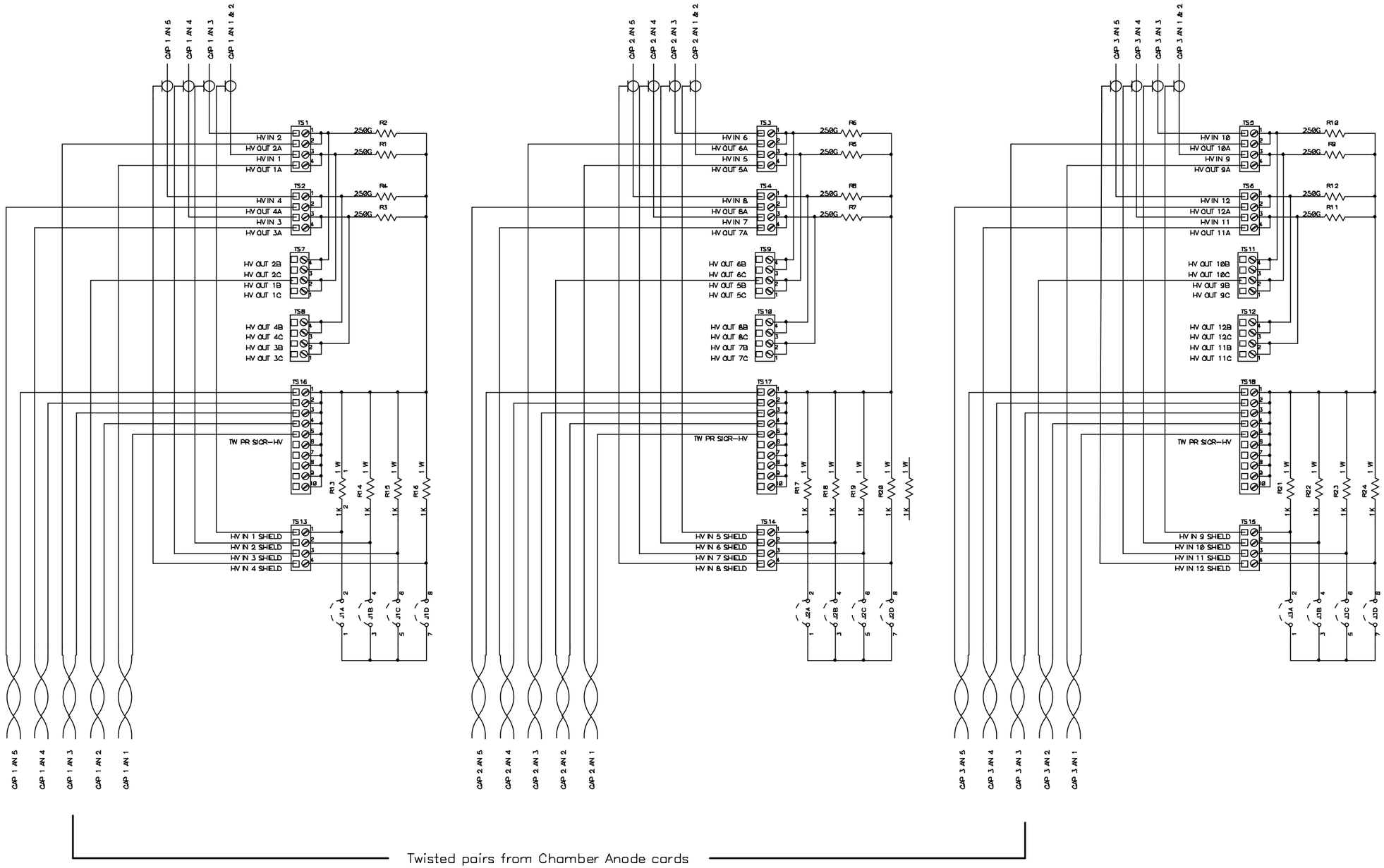

Los Alamos National Laboratory		
Title: MUON TRACKING HV DIST BOX 2 South		
SCHEMATIC OCTANT 3		
Size C	Date Originated: 14 April 1999	
	Last Revised: 16 Nov 2000	
LANL DWG #: 63Y299047A		Approved By: W. Sondheim
PHENIX #: 105-0312-223		Drawn by: G. Hart . P-25
Filename: ST 2 S HV DIST BOX.sch		Sheet 3 of 8

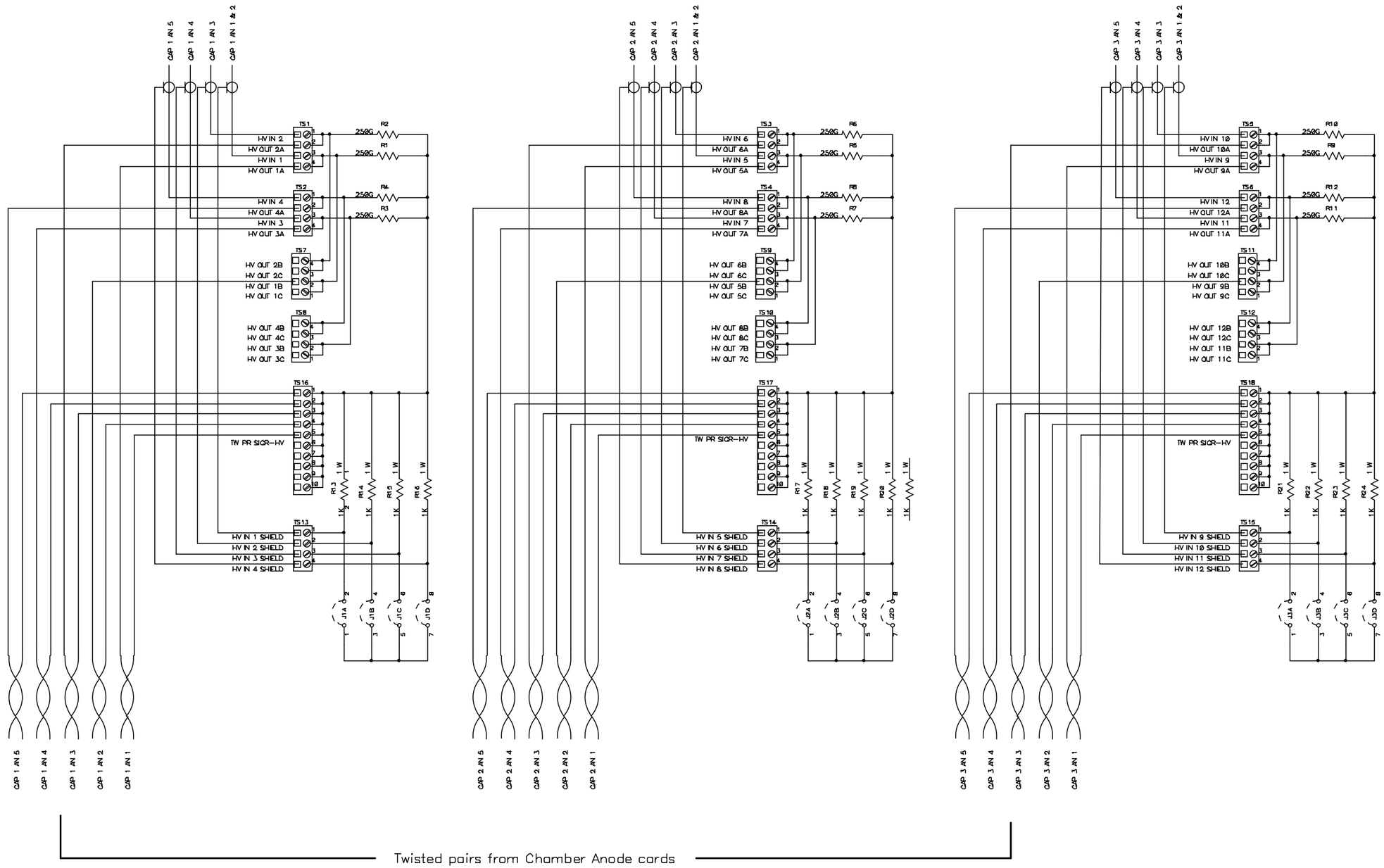

Los Alamos National Laboratory		
Title: MUON TRACKING HV DIST BOX 2 South		
SCHEMATIC OCTANT 4		
Size C	Date Originated: 14 April 1999	
	Last Revised: 16 Nov 2000	
LANL DWG #: 63Y299047A		Approved By: W. Sondheim
PHENIX #: 105-0312-223		Drawn by: G. Hart . P-25
Filename: ST 2 S HV DIST BOX.sch		Sheet 4 of 8

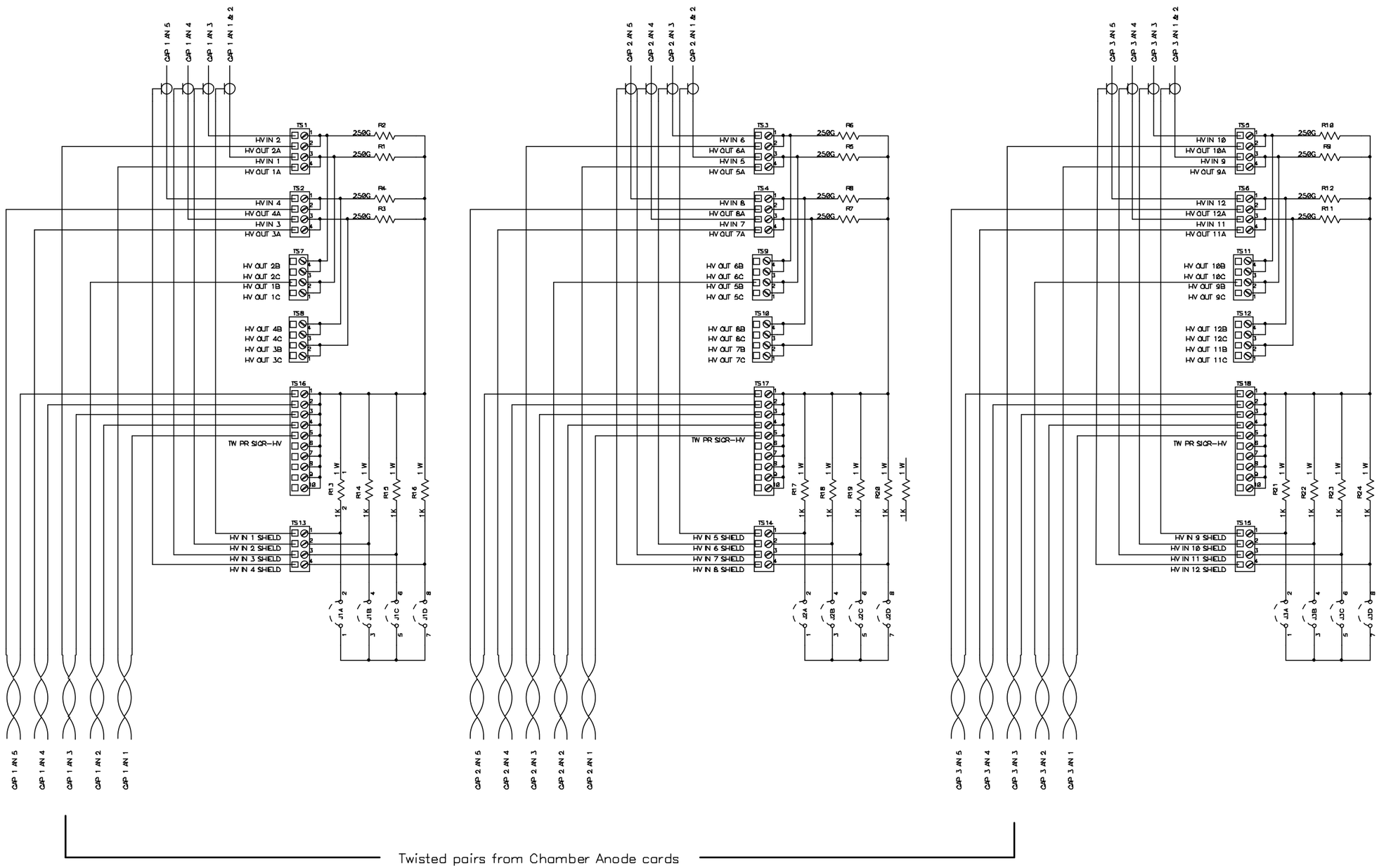

Los Alamos National Laboratory		
Title: MUON TRACKING HV DIST BOX 2 South		
SCHEMATIC OCTANT 5		
Size C	Date Originated: 14 April 1999	
	Last Revised: 16 Nov 2000	
LANL DWG #: 63Y299047A		Approved By: W. Sondheim
PHENIX #: 105-0312-223		Drawn by: G. Hart , P-25
Filename: ST 2 S HV DIST BOX.sch		Sheet 5 of 8

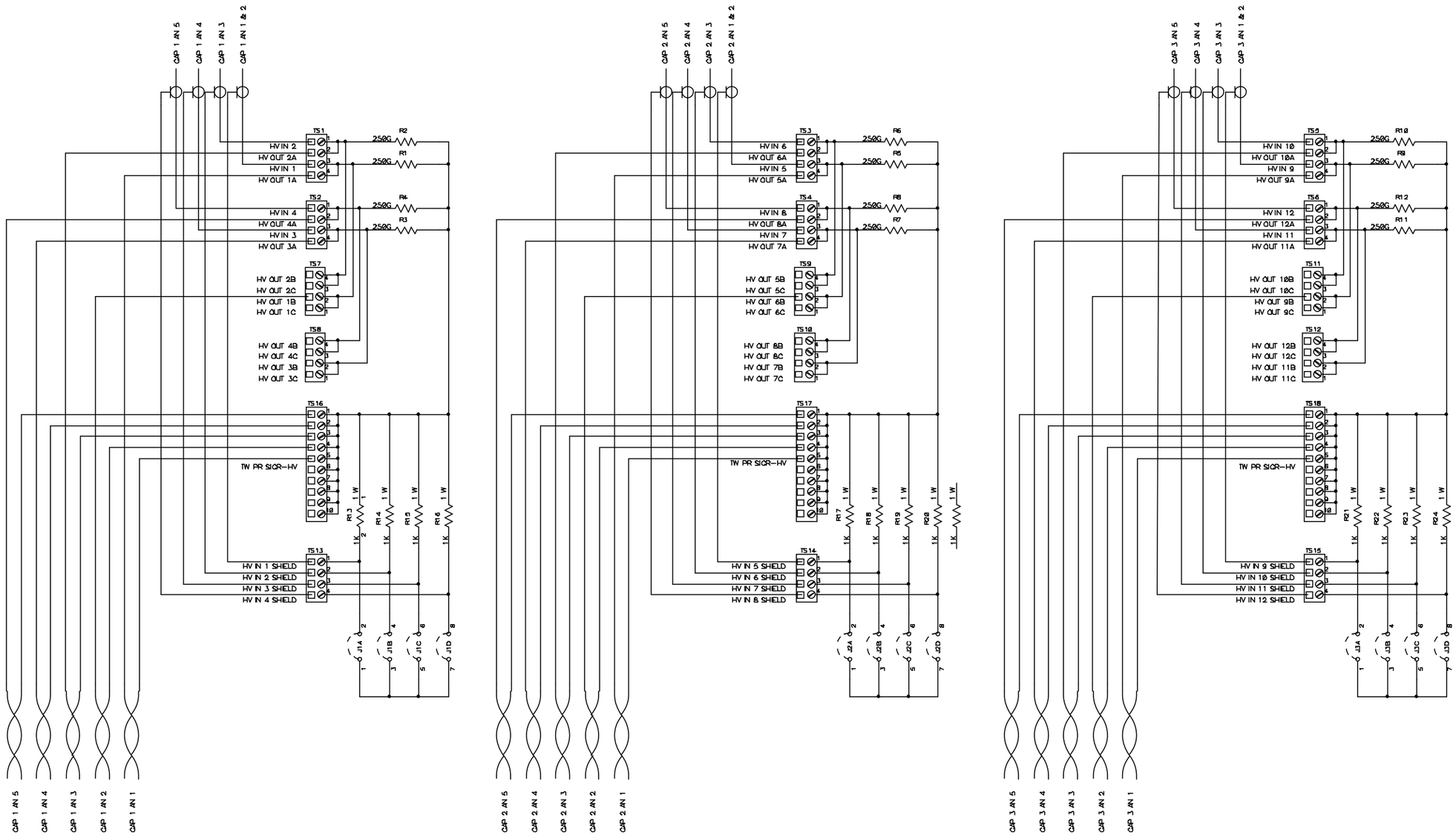

Los Alamos National Laboratory		
Title: MUON TRACKING HV DIST BOX 2 South		
SCHEMATIC OCTANT 6		
Size C	Date Originated: 14 April 1999	
	Last Revised: 16 Nov 2000	
LANL DWG #: 63Y299047A		Approved By: W. Sondheim
PHENIX #: 105-0312-223		Drawn by: G. Hart . P-25
Filename: ST 2 S HV DIST BOX.sch		Sheet 6 of 8

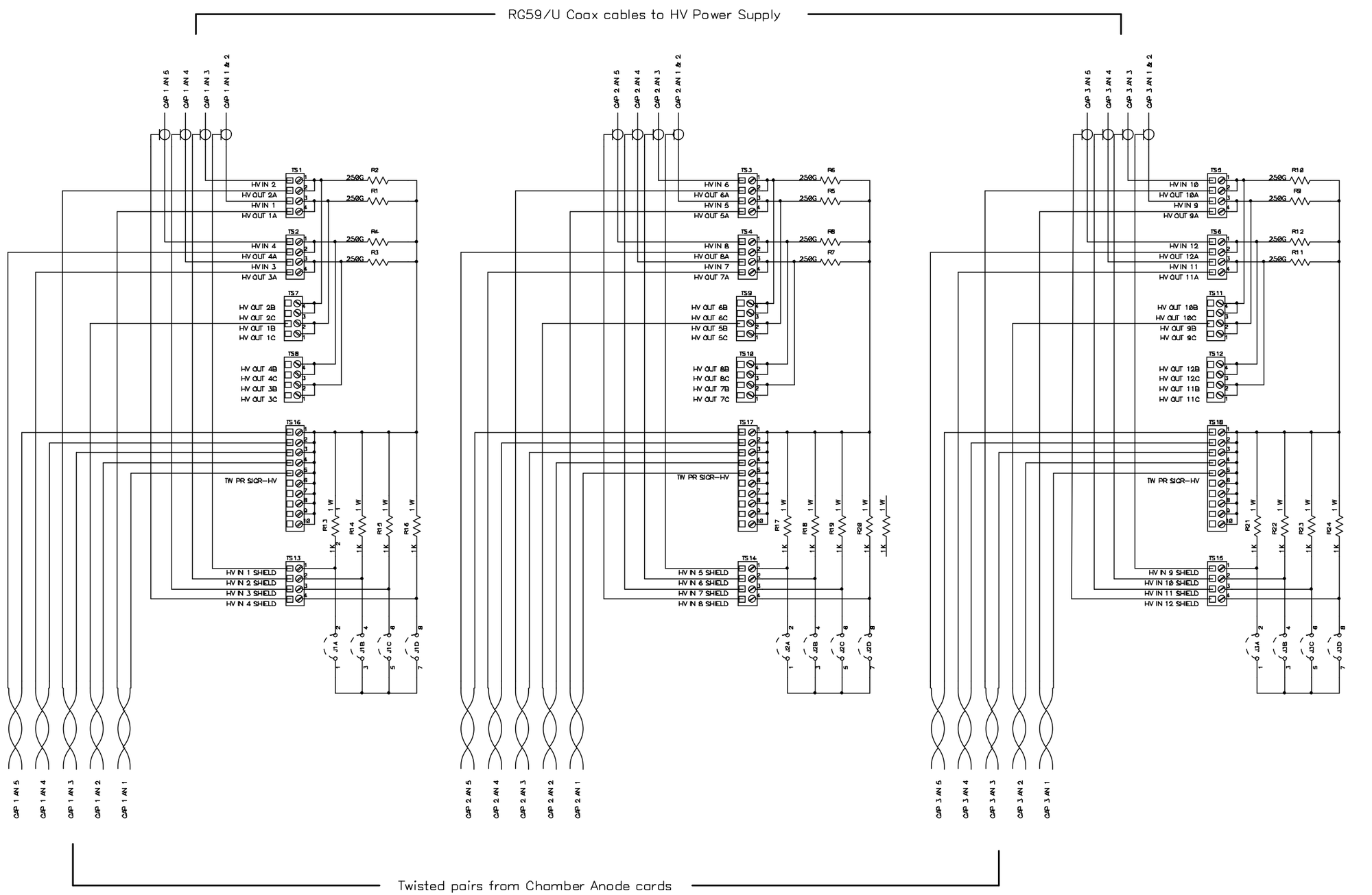

Los Alamos National Laboratory		
Title: MUON TRACKING HV DIST BOX 2 South		
SCHEMATIC OCTANT 7		
Size C	Date Originated: 14 April 1999	
	Last Revised: 16 Nov 2000	
LANL DWG #: 63Y299047A		Approved By: W. Sondheim
PHENIX #: 105-0312-223		Drawn by: G. Hart . P-25
Filename: ST 2 S HV DIST BOX.sch		Sheet 7 of 8

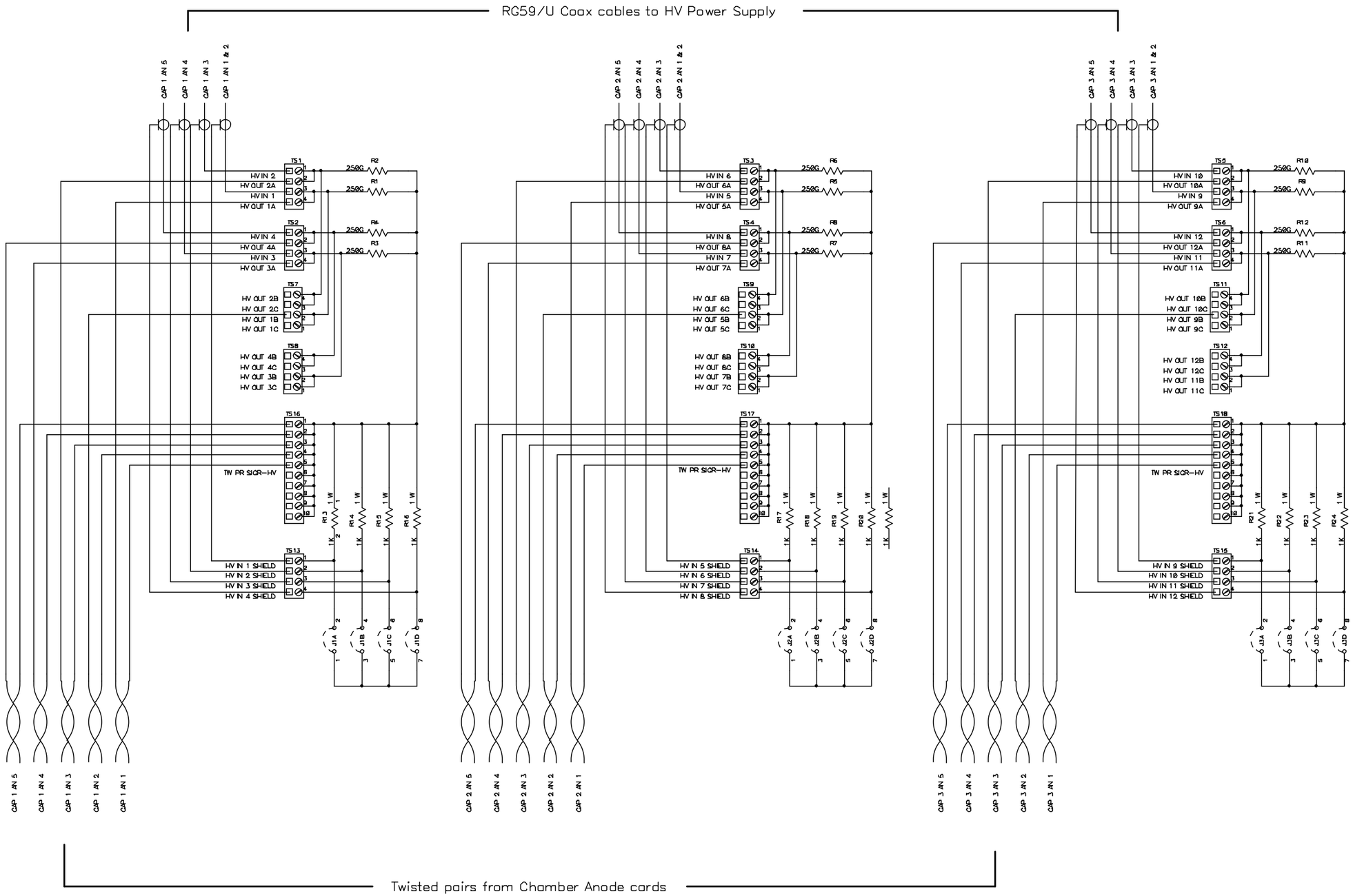

Los Alamos National Laboratory		
Title: MUON TRACKING HV DIST BOX 2 South		
SCHEMATIC OCTANT 8		
Size C	Date Originated: 14 April 1999	
	Last Revised: 16 Nov 2000	
LANL DWG #: 63Y299047A		Approved By:W. Sondheim
PHENIX #: 105-0312-223		Drawn by: G. Hart , P-25
Filename: ST 2 S HV DIST BOX.sch		Sheet 8 of 8

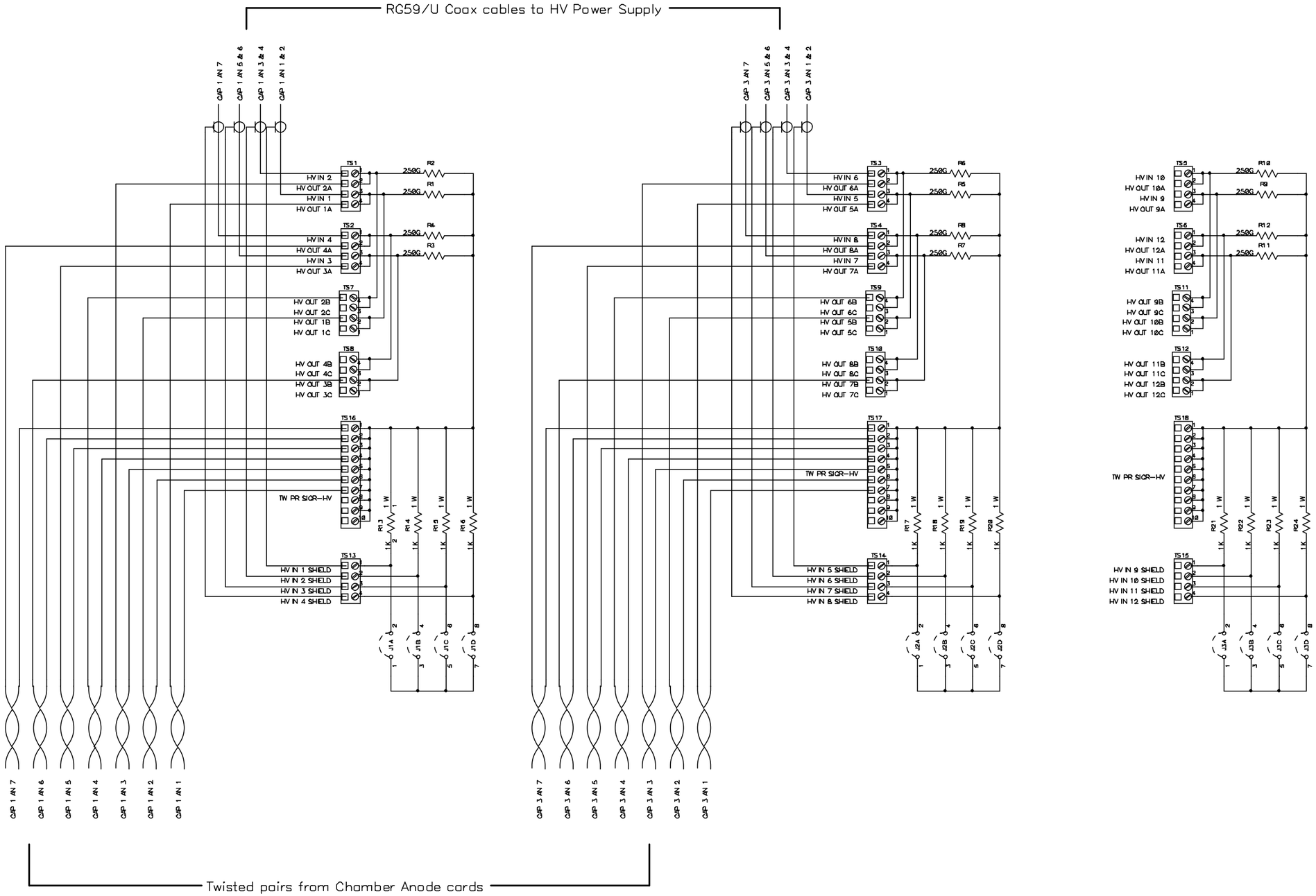

Los Alamos National Laboratory		
Title: MUON TRACKING HV DIST BOX 3 South		
SCHEMATIC OCTANT 1		
Size C	Date Originated: 14 April 1999	
	Last Revised: 16 Nov 2000	
LANL DWG #: 63Y299047A		Approved By: W. Sondheim
PHENIX #: 105-0312-225		Drawn by: G. Hart . P-25
Filename: ST 3 S HV DIST BOX.sch		Sheet 1 of 8

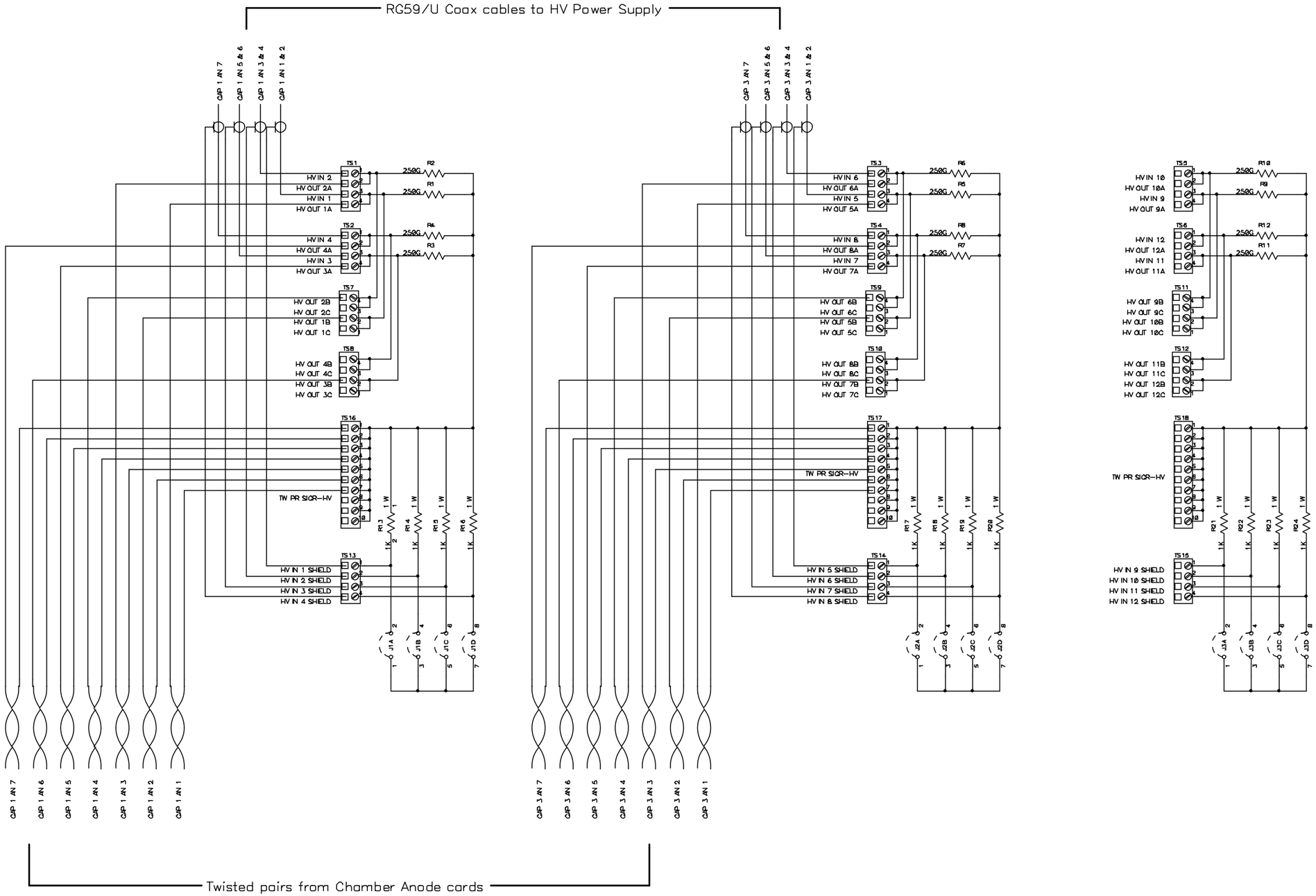

Los Alamos National Laboratory		
Title: MUON TRACKING HV DIST BOX 3 South		
SCHEMATIC OCTANT 2		
Size C	Date Originated: 14 April 1999	
	Last Revised: 16 Nov 2000	
LANL DWG #: 63Y299047A		Approved By: W. Sondheim
PHENIX #: 105-0312-225		Drawn by: G. Hart , P-25
Filename: ST 3 S HV DIST BOX.sch		Sheet 2 of 8

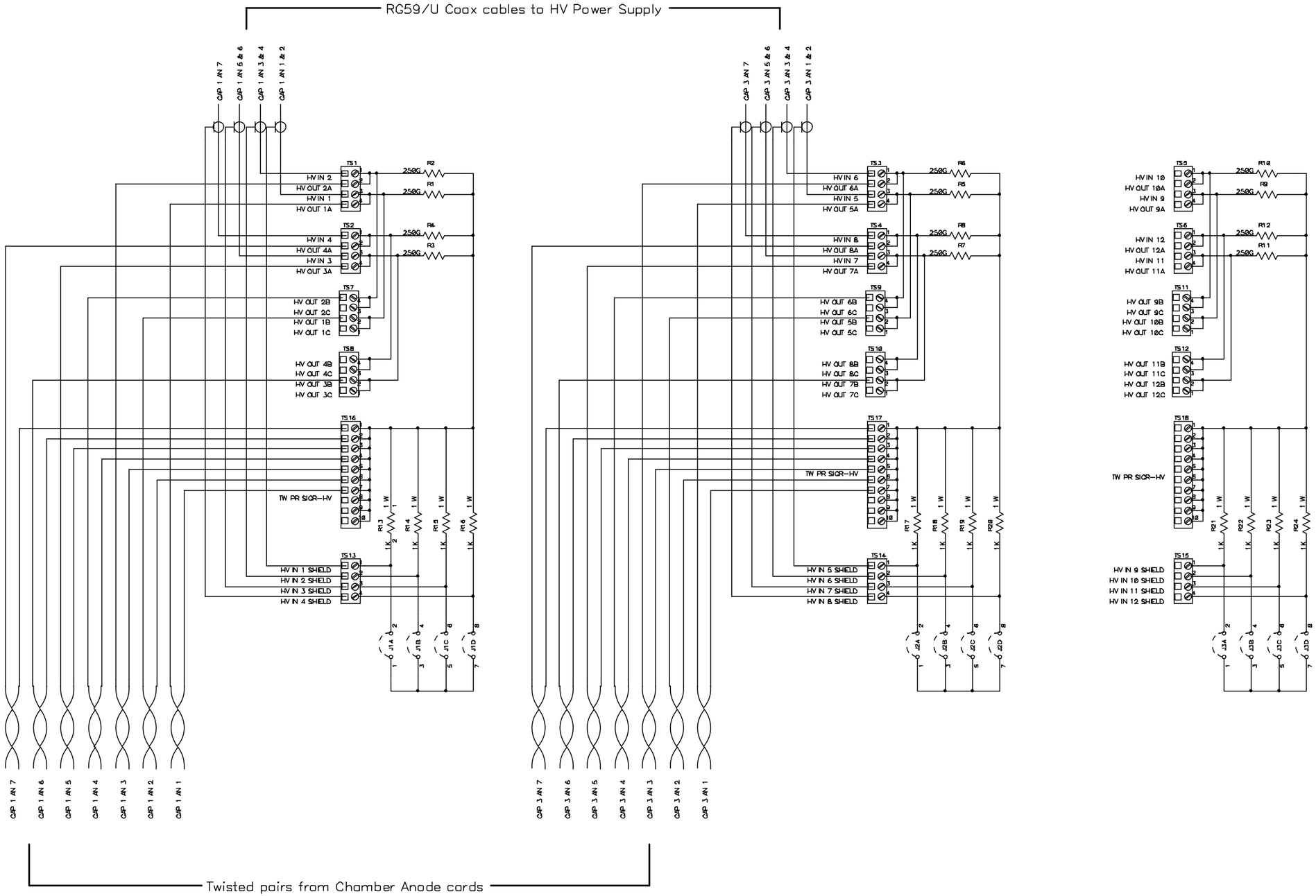

Los Alamos National Laboratory		
Title: MUON TRACKING HV DIST BOX 3 South		
SCHEMATIC OCTANT 3		
Size C	Date Originated: 14 April 1999	
	Last Revised: 16 Nov 2000	
LANL DWG #: 63Y299047A		Approved By: W. Sondheim
PHENIX #: 105-0312-225		Drawn by: G. Hart , P-25
Filename: ST 3 S HV DIST BOX.sch		Sheet 3 of 8

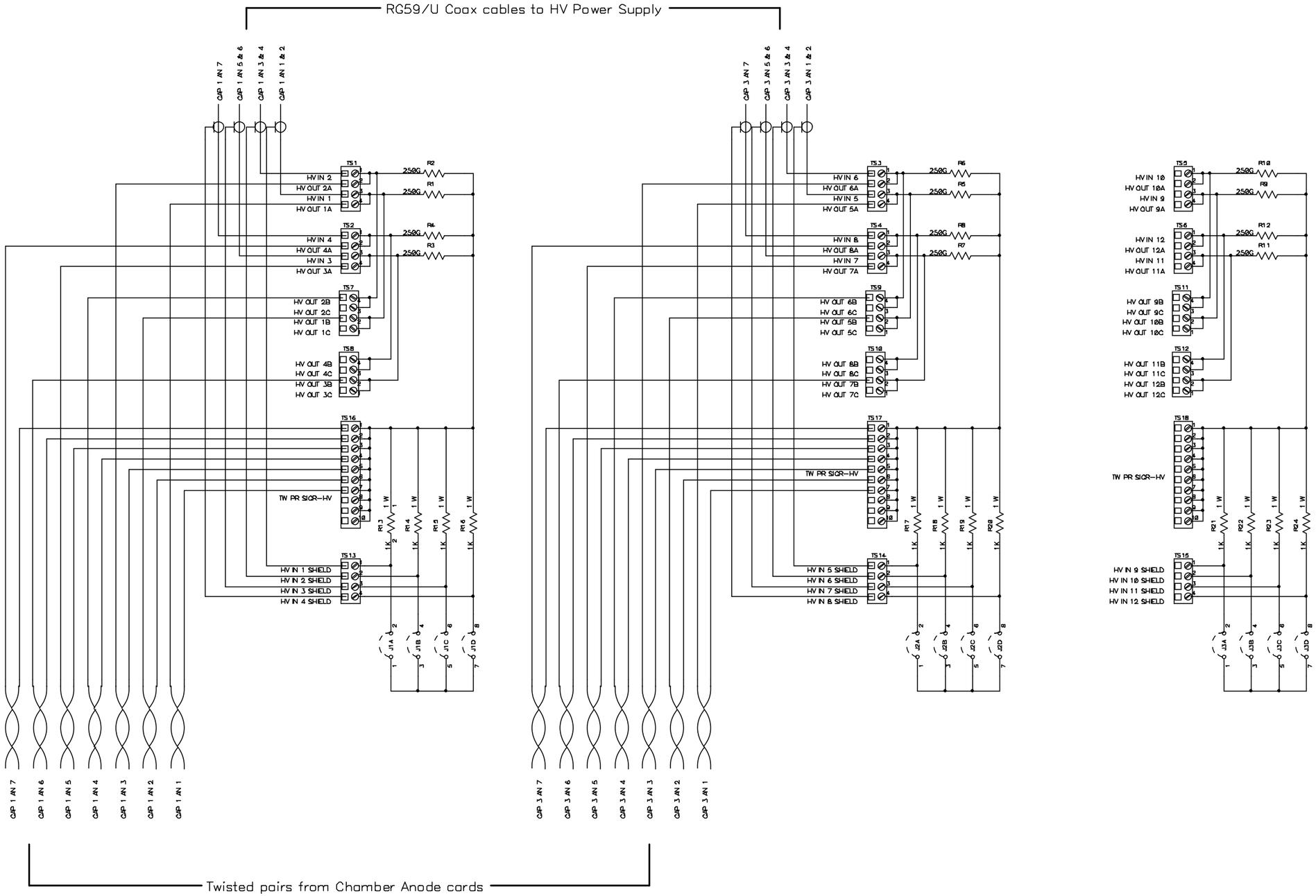

Los Alamos National Laboratory		
Title: MUON TRACKING HV DIST BOX 3 South		
SCHEMATIC OCTANT 4		
Size C	Date Originated: 14 April 1999	
	Last Revised: 16 Nov 2000	
LANL DWG #: 63Y299047A		Approved By: W. Sondheim
PHENIX #: 105-0312-225		Drawn by: G. Hart . P-25
Filename: ST 3 S HV DIST BOX.sch		Sheet 4 of 8

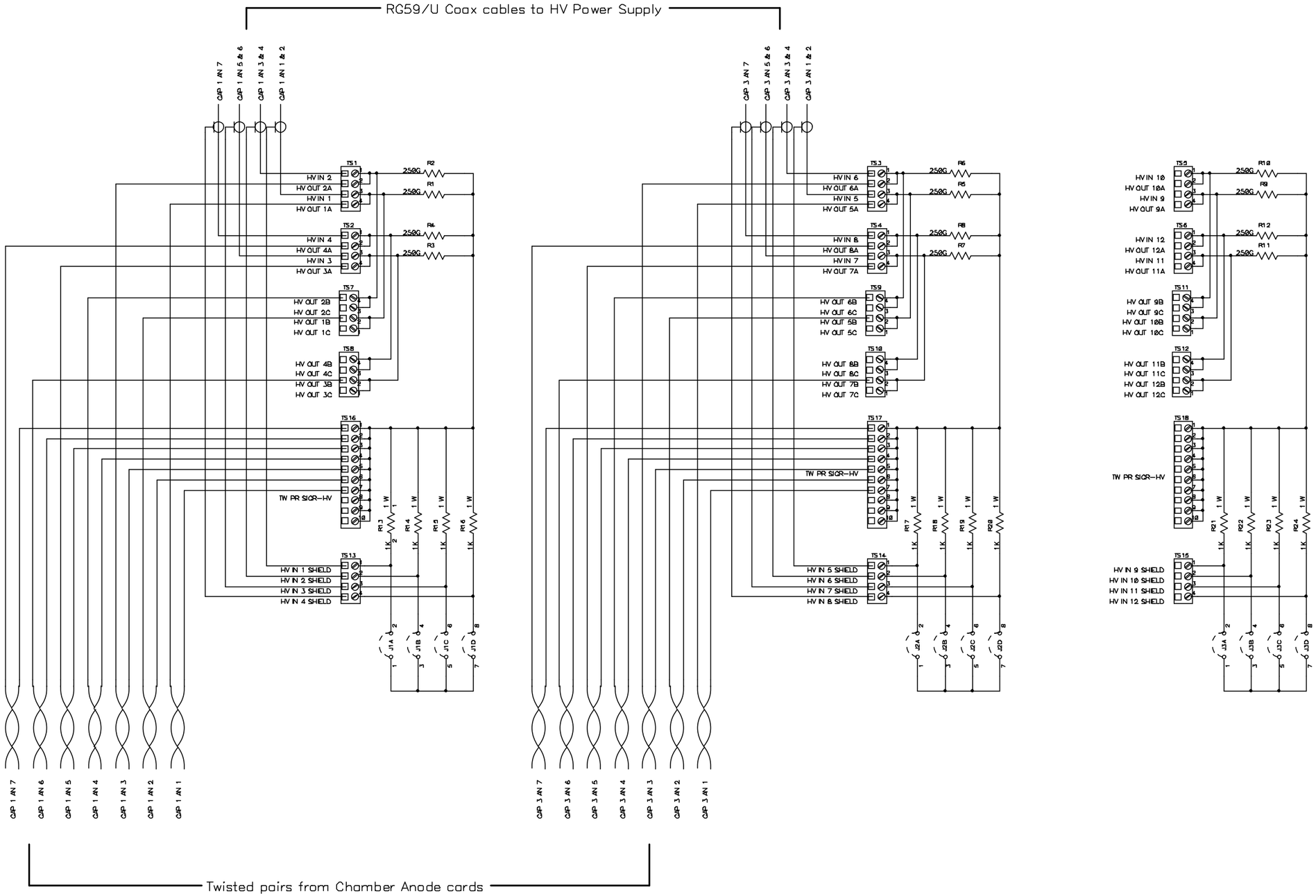

Los Alamos National Laboratory		
Title: MUON TRACKING HV DIST BOX 3 South		
SCHEMATIC OCTANT 5		
Size C	Date Originated: 14 April 1999	
	Last Revised: 16 Nov 2000	
LANL DWG #: 63Y299047A		Approved By:W. Sondheim
PHENIX #: 105-0312-225		Drawn by: G. Hart , P-25
Filename: ST 3 S HV DIST BOX.sch		Sheet 5 of 8

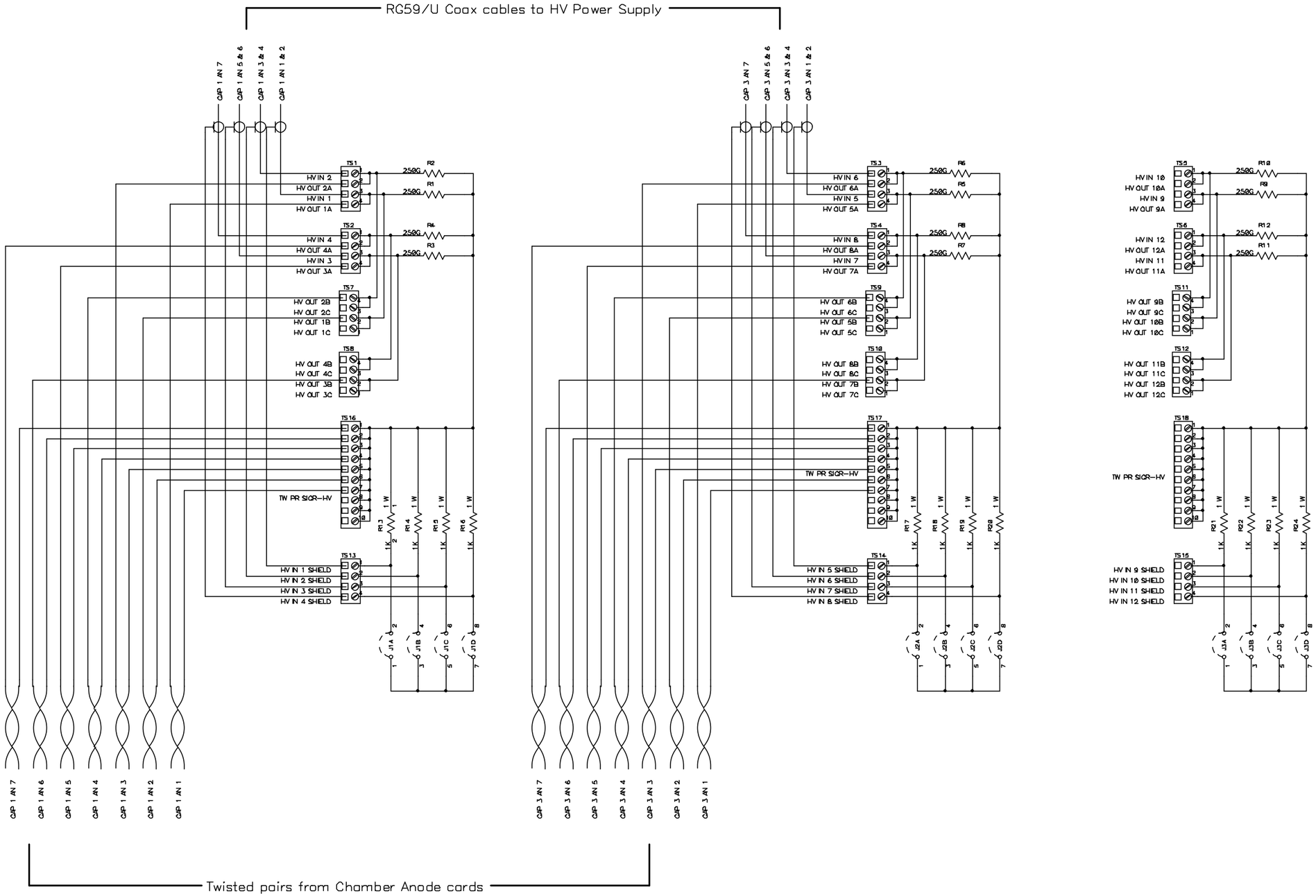

Los Alamos National Laboratory		
Title: MUON TRACKING HV DIST BOX 3 South		
SCHEMATIC OCTANT 6		
Size C	Date Originated: 14 April 1999	
	Last Revised: 16 Nov 2000	
LANL DWG #: 63Y299047A		Approved By: W. Sondheim
PHENIX #: 105-0312-225		Drawn by: G. Hart . P-25
Filename: ST 3 S HV DIST BOX.sch		Sheet 6 of 8

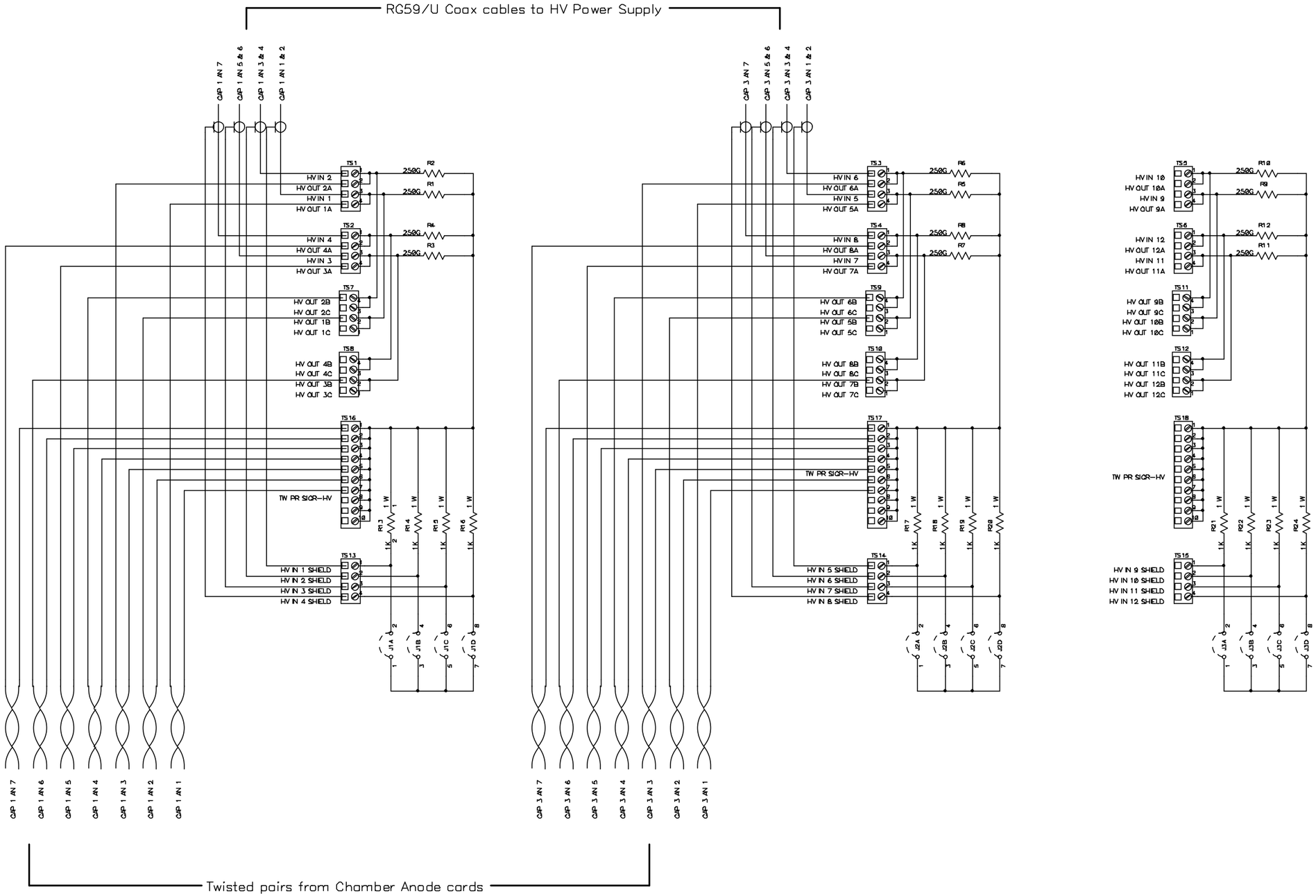

Los Alamos National Laboratory		
Title: MUON TRACKING HV DIST BOX 3 South		
SCHEMATIC OCTANT 7		
Size C	Date Originated: 14 April 1999	
	Last Revised: 16 Nov 2000	
LANL DWG #: 63Y299047A		Approved By:W. Sondheim
PHENIX #: 105-0312-225		Drawn by: G. Hart , P-25
Filename: ST 3 S HV DIST BOX.sch		Sheet 7 of 8

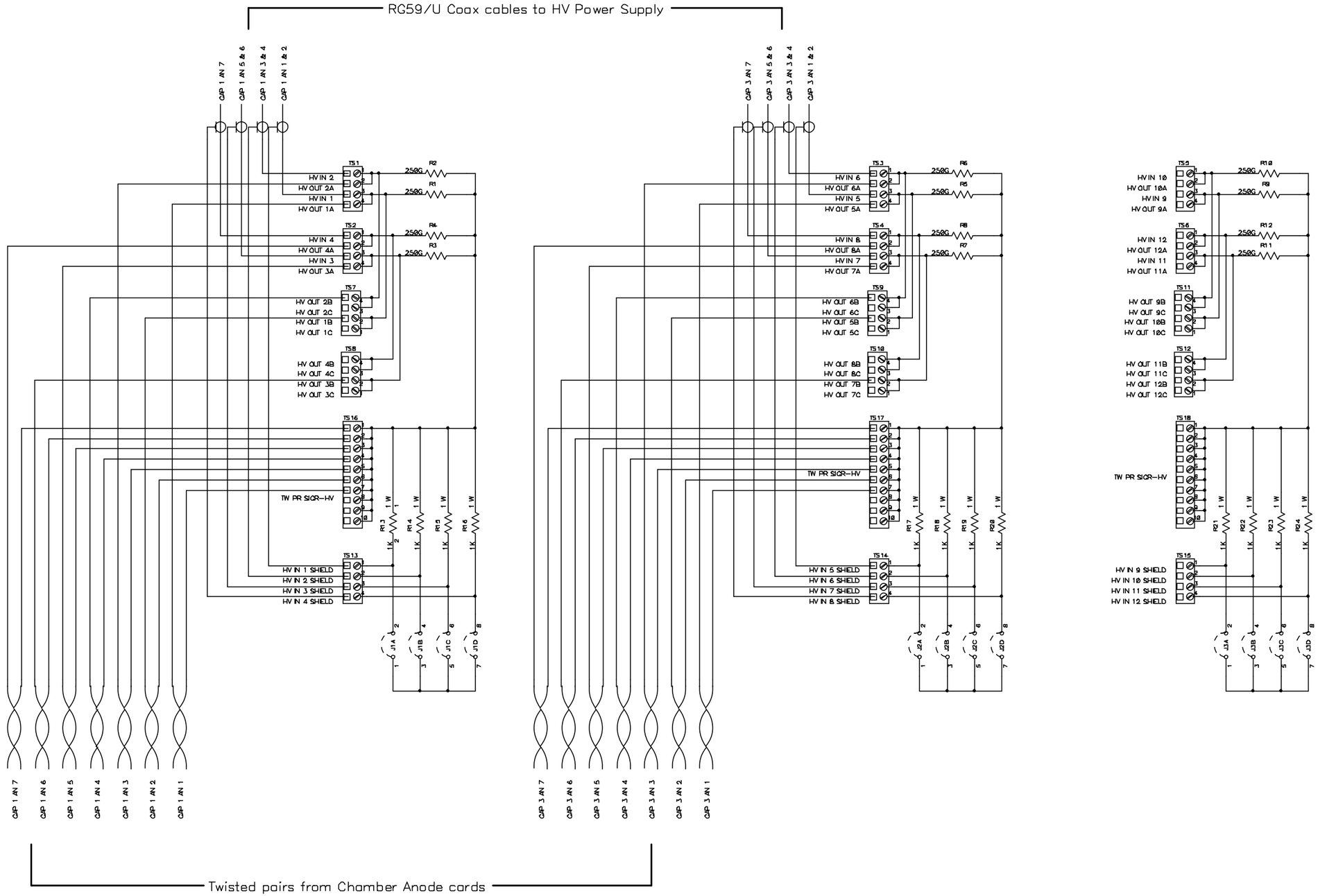

Los Alamos National Laboratory		
Title: MUON TRACKING HV DIST BOX 3 South		
SCHEMATIC OCTANT 8		
Size C	Date Originated: 14 April 1999	
	Last Revised: 16 Nov 2000	
LANL DWG #: 63Y299047A		Approved By:W. Sondheim
PHENIX #: 105-0312-225		Drawn by: G. Hart , P-25
Filename: ST 3 S HV DIST BOX.sch		Sheet 8 of 8

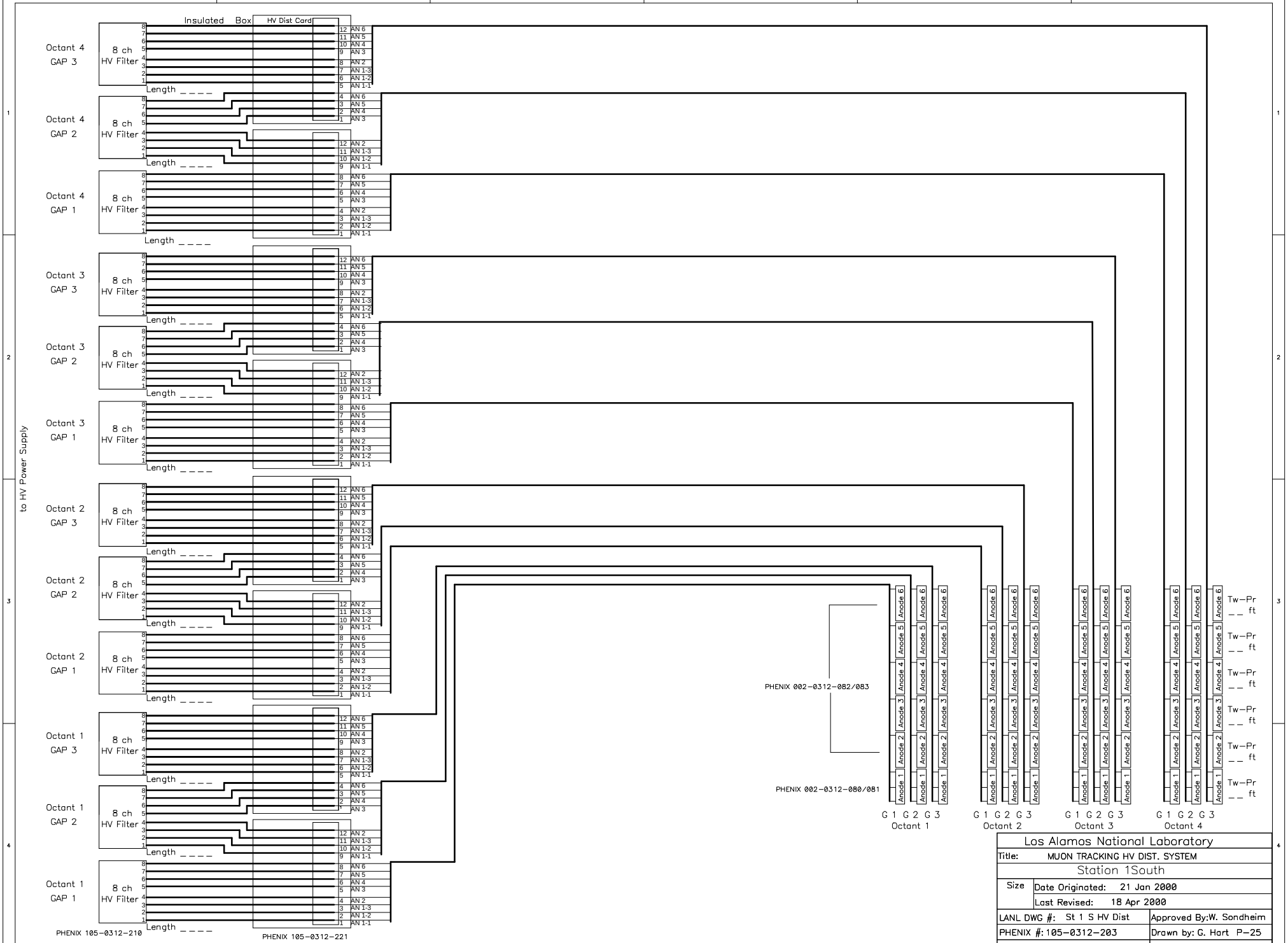

Los Alamos National Laboratory		
Title:	MUON TRACKING HV DIST. SYSTEM	
Station 1South		
Size	Date Originated: 21 Jan 2000	
	Last Revised: 18 Apr 2000	
LANL DWG #: St 1 S HV Dist		Approved By:W. Sondheim
PHENIX #: 105-0312-203		Drawn by: G. Hart P-25
Filename: St 1 S HV Dist.sch		Sheet 1 of 2

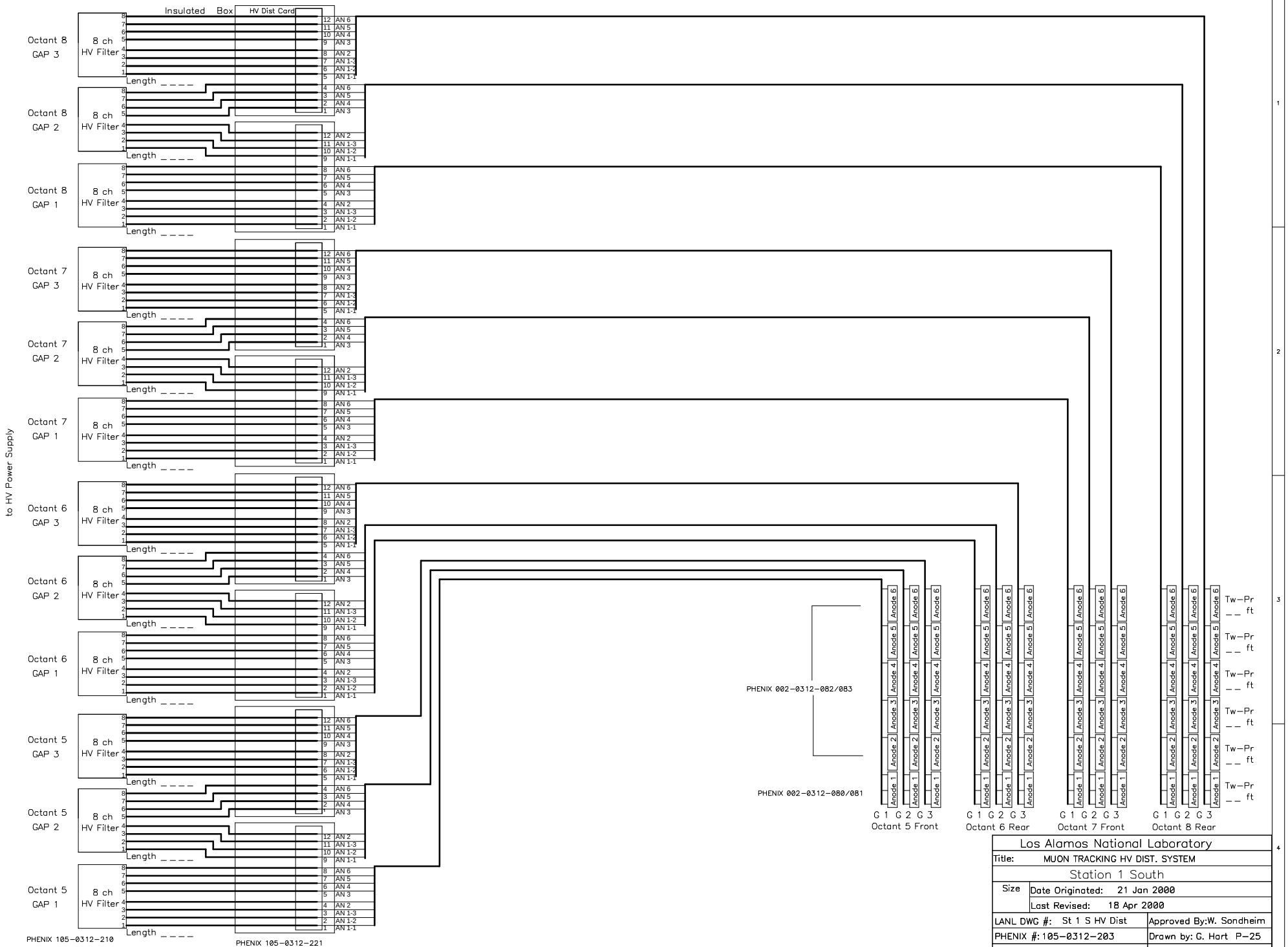

Los Alamos National Laboratory		
Title:	MUON TRACKING HV DIST. SYSTEM	
Station 1 South		
Size	Date Originated: 21 Jan 2000	
	Last Revised: 18 Apr 2000	
LANL DWG #: St 1 S HV Dist		Approved By: W. Sondheim
PHENIX #: 105-0312-203		Drawn by: G. Hart P-25
Filename: St 1 S HV Dist.sch		Sheet 2 of 2

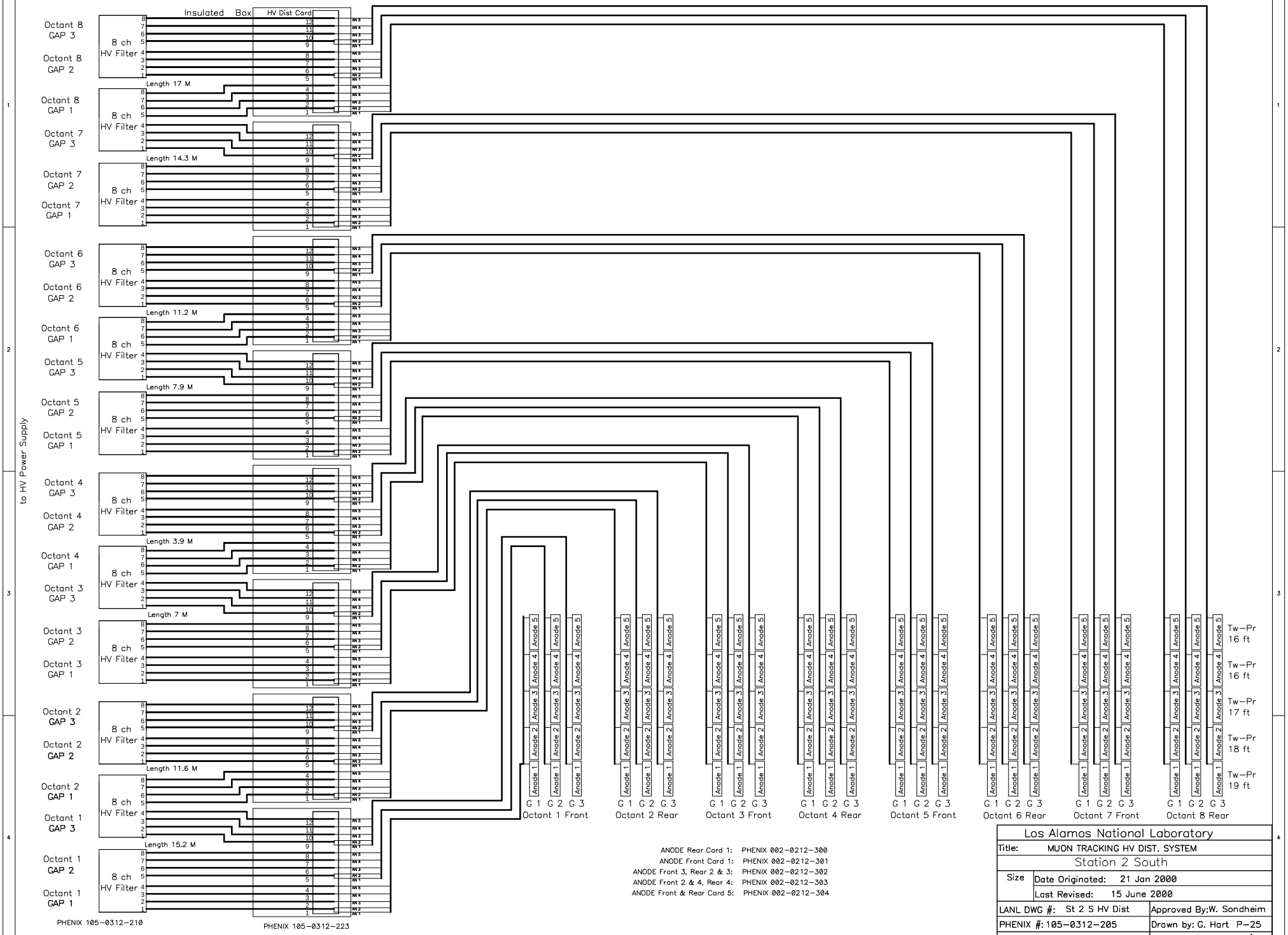

ANODE Rear Card 1: PHENIX 002–0212–300
ANODE Front Card 1: PHENIX 002–0212–301
ANODE Front 3, Rear 2 & 3: PHENIX 002–0212–302
ANODE Front 2 & 4, Rear 4: PHENIX 002–0212–303
ANODE Front & Rear Card 5: PHENIX 002–0212–304

Los Alamos National Laboratory		
Title:	MUON TRACKING HV DIST. SYSTEM	
Station 2 South		
Size	Date Originated: 21 Jan 2000	
	Last Revised: 15 June 2000	
LANL DWG #: St 2 S HV Dist		Approved By: W. Sondheim
PHENIX #: 105–0312–205		Drawn by: G. Hart P–25
Filename: St 2 S HV Dist.sch		Sheet 1 of 1

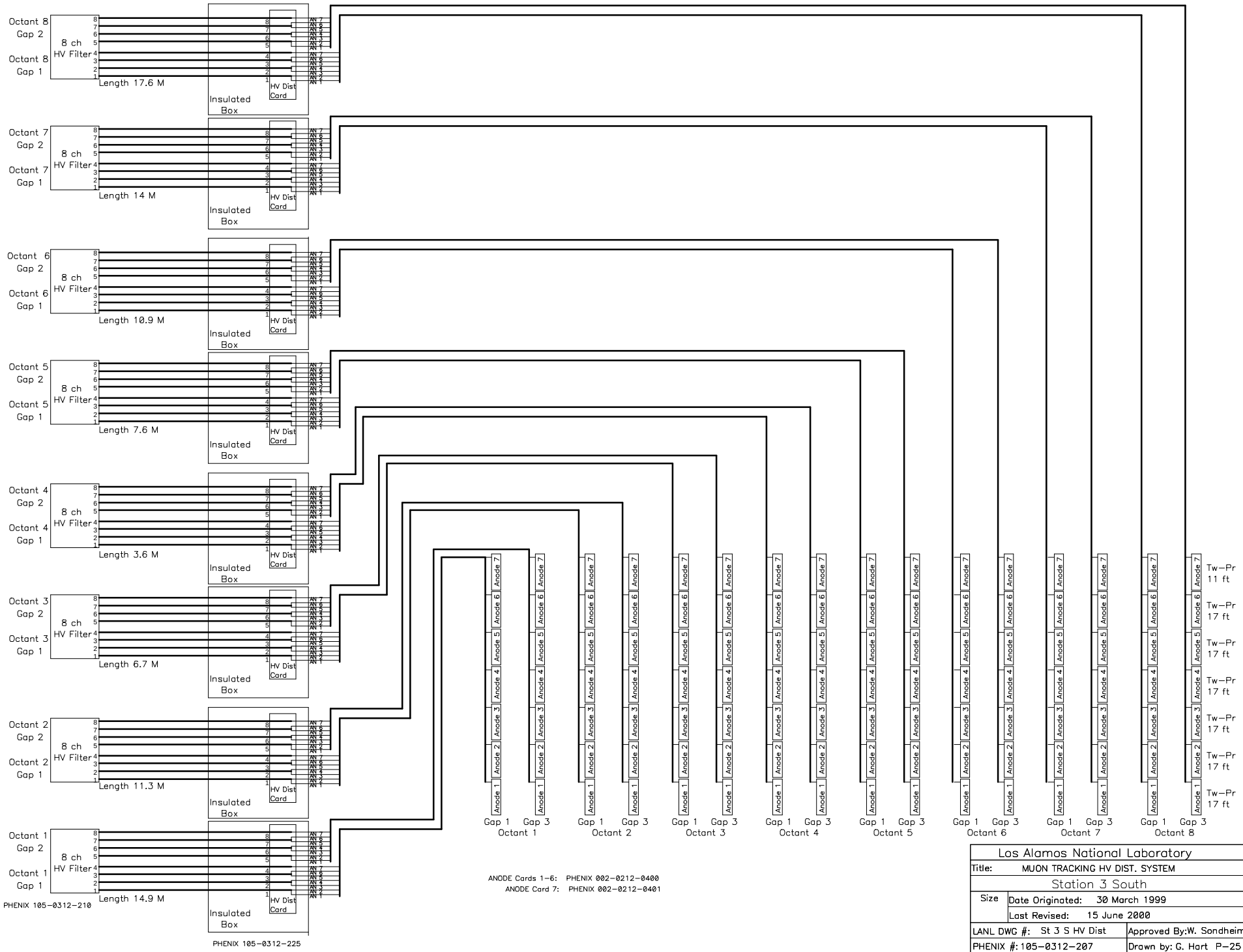

Los Alamos National Laboratory		
Title:	MUON TRACKING HV DIST. SYSTEM	
Station 3 South		
Size	Date Originated: 30 March 1999	
	Last Revised: 15 June 2000	
LANL DWG #: St 3 S HV Dist		Approved By: W. Sondheim
PHENIX #: 105-0312-207		Drawn by: G. Hart P-25
Filename: St 3 S HV Dist.sch		Sheet of

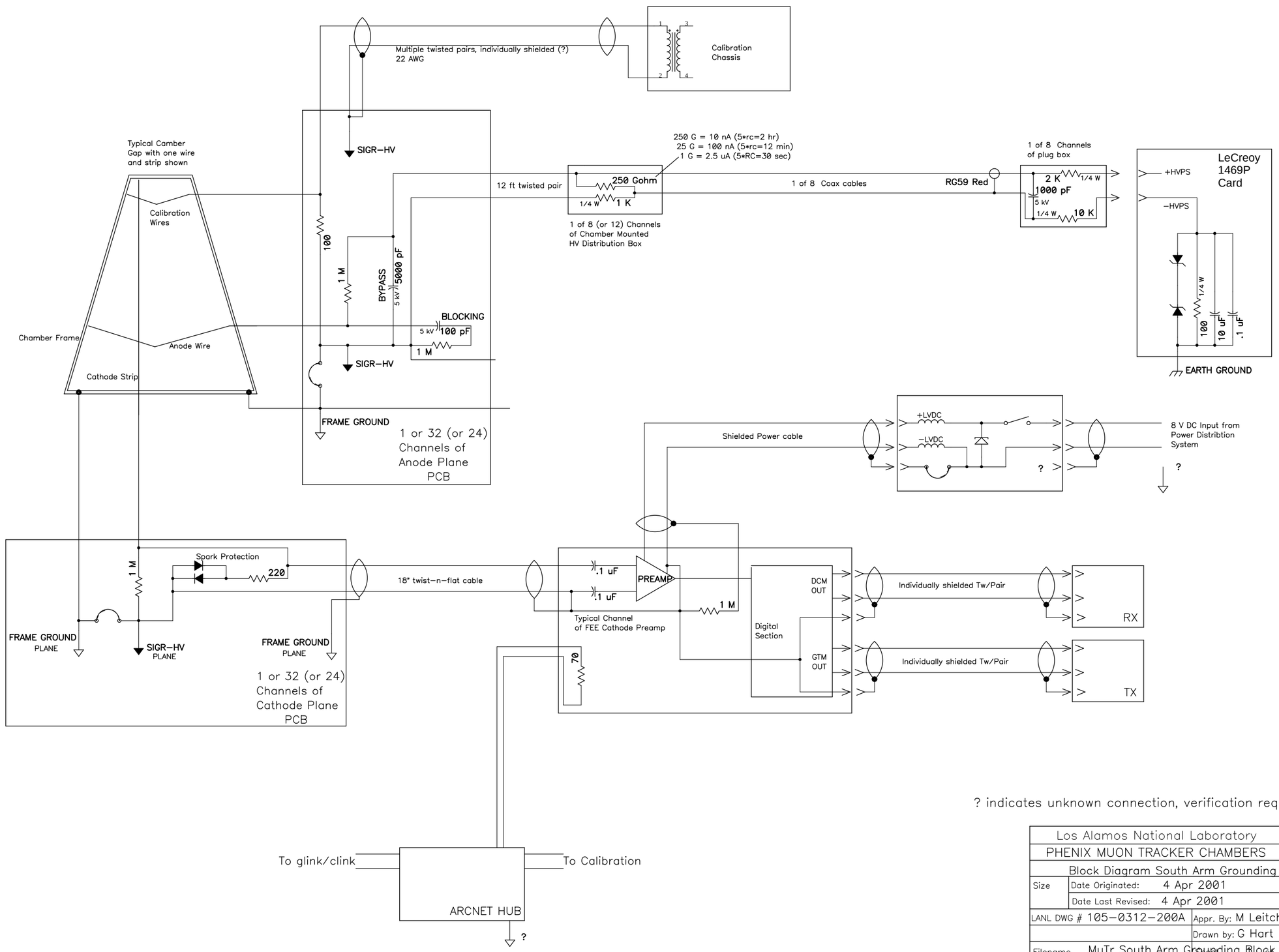

? indicates unknown connection, verification required.

Los Alamos National Laboratory	
PHENIX MUON TRACKER CHAMBERS	
Block Diagram South Arm Grounding	
Size	Date Originated: 4 Apr 2001
	Date Last Revised: 4 Apr 2001
LANL DWG # 105–0312–200A	Appr. By: M Leitch
	Drawn by: G Hart
Filename MuTr South Arm Grounding Block.sch	Sheet 1 of 1

South Arm HVDS Components

Wire / Cable
Technical data sheet RG 59/U Coax
http://www.colemancable.com/catalog/92004.pdf
Technical data sheet Belden, 83003 wire
http://ecom.belden.com/static/ZZBLDNTD01FROMCATA.HTM?P0=83003
Technical data sheet Judd, 5KV wire
http://www.juddwire.com/jwelcome.nsf/flexrad_hv.htm

Hardware
Drawing of Data of Weidmuller enclosure
http://catalog.weidmuller.com/asp/datasheet.asp?PN=951024&FAM=Boxes
Drawing & Data of MK Term Blocks
http://www.newark.com/product-details/text/cd119/5249.html
Drawing & Data of Bud plastic box
http://www.budind.com/pdf/hb789.pdf

Electronic Components
Drawing & Data of 30GAD10 Capacitor
http://www.newark.com/product-details/text/cd119/7173.html
Drawing & Data of 1 Watt Resistors
http://www.newark.com/product-details/datasheet/spc/ta-84.pdf
Drawing & Data of MOX HV Resistors
http://www.ohmite.com/catalog/pdf/v_minimox.pdf