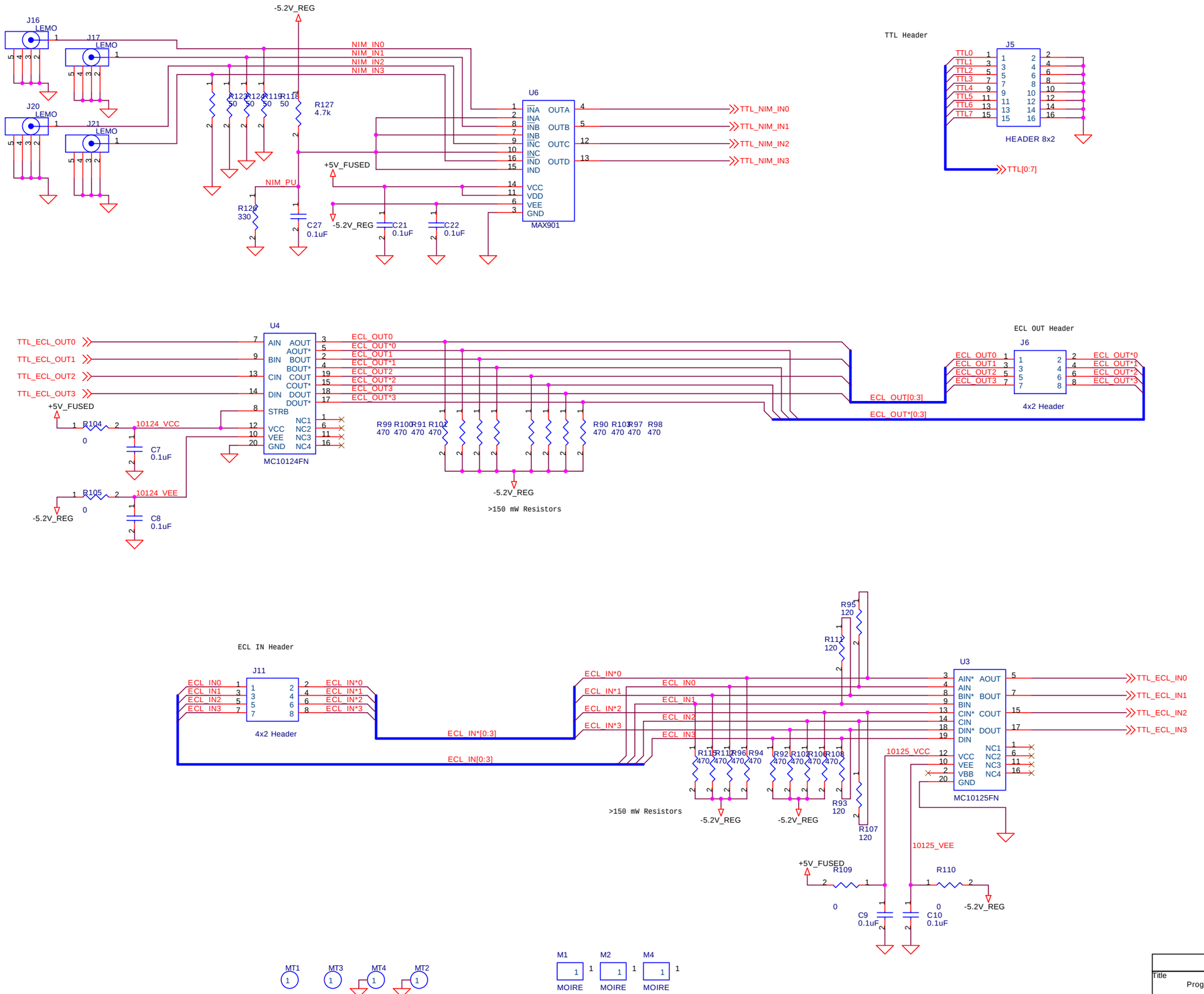

Title	Programmable Mezzanine Card Rev 1.1
Size	Document Number Brad Hall / Matt Kindschi / Jeff Andresen
Rev	<RevCode>
Date: Thursday, June 05, 2003	Sheet 1 of 6

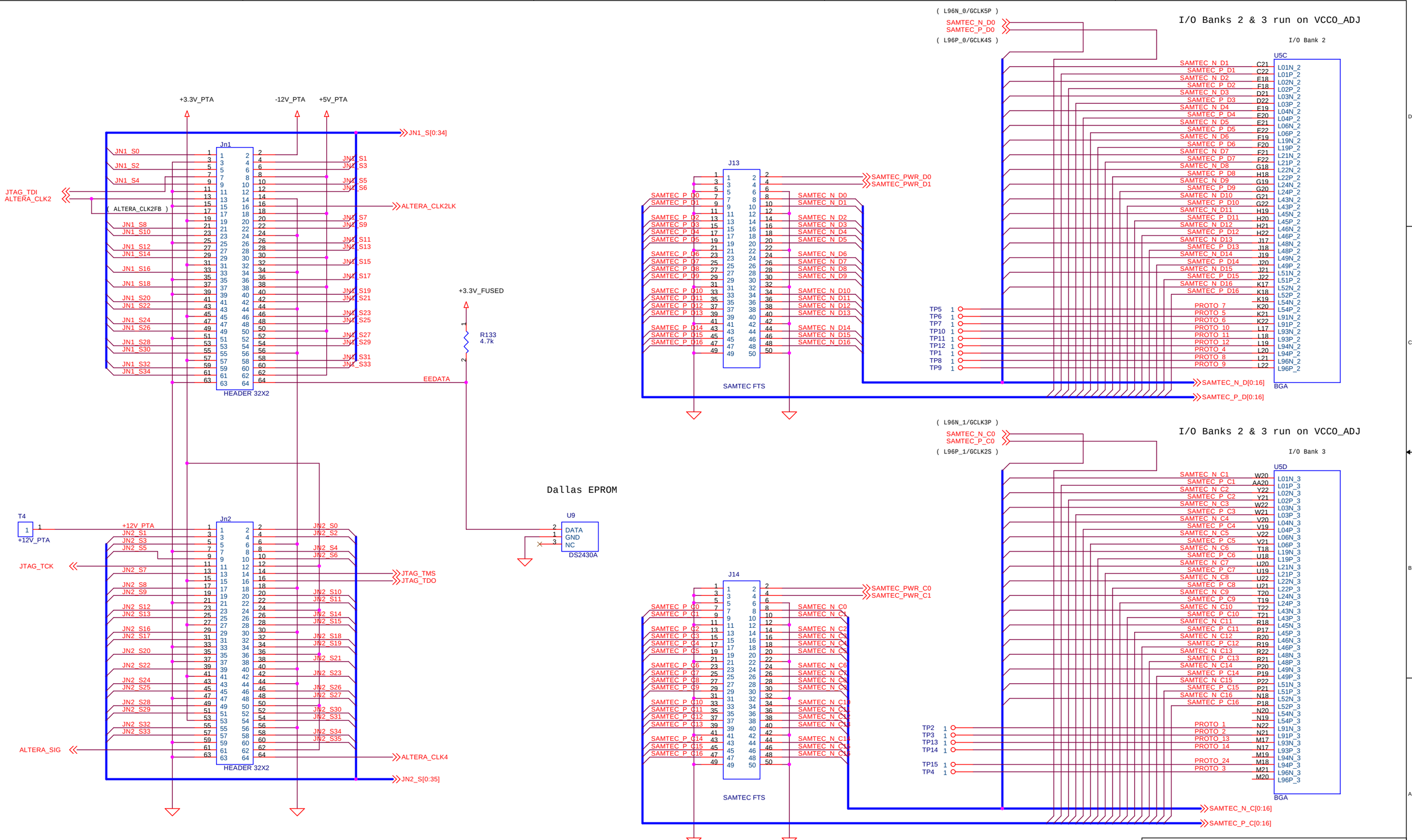

Title	Programmable Mezzanine Card Rev 1.1
Size	Document Number: Brad Hall / Matt Kindschi / Jeff Andresen — Rev 1
Date: Thursday, June 05, 2003	Sheet 2 of 6

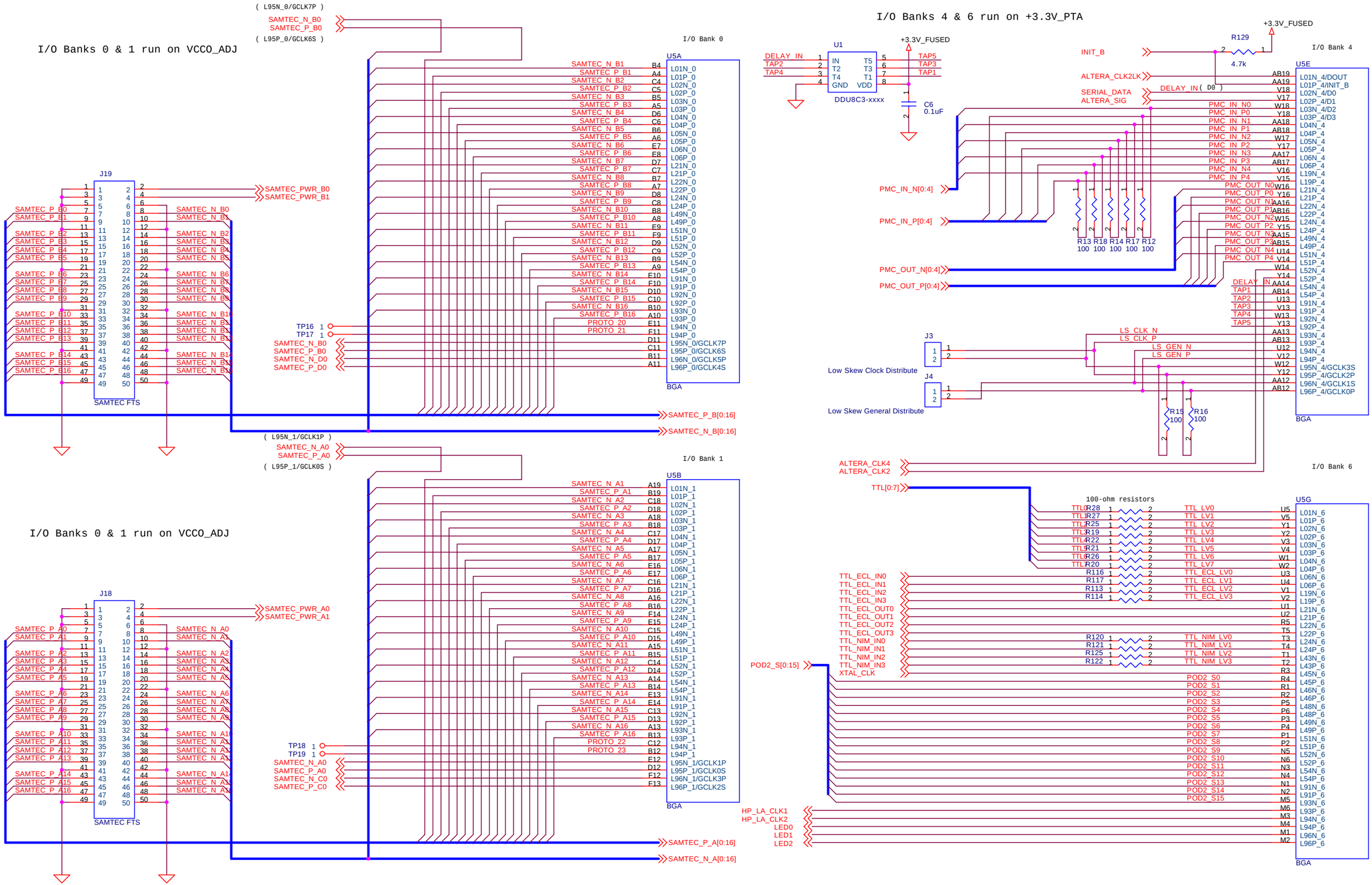

Title: Programmable Mezzanine Card Rev 1.1

Size | Document Number: Brad Hall / Matt Kindschi / Jeff Andresen | Rev: <RevC

Date: Thursday, June 05, 2003 | Sheet 3 of 6

Samtec Termination Resistors

All Termination Resistors are 100 ohms.

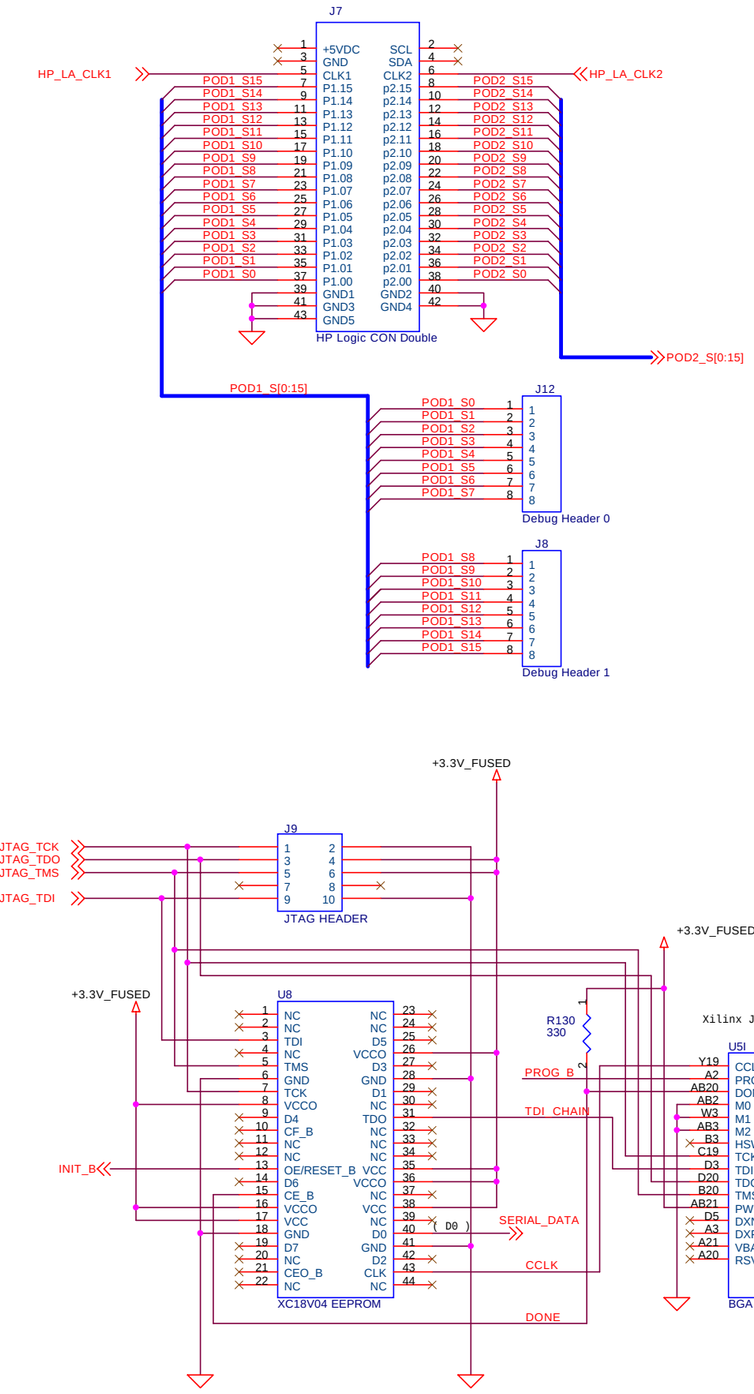

I/O Banks 5 & 7 run on +3.3V_PTA

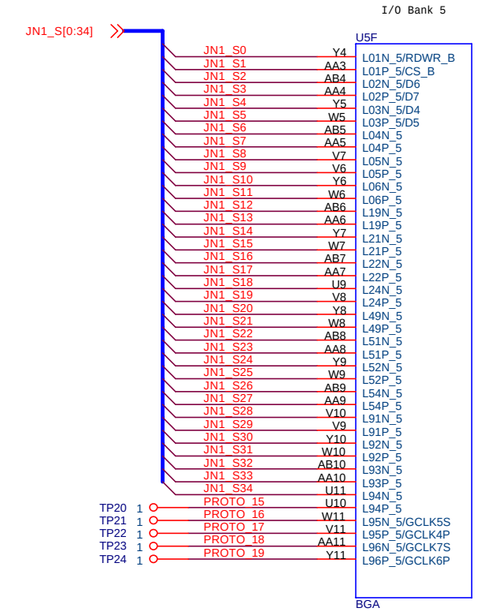

I/O Banks 5 & 7 run on +3.3V_PTA

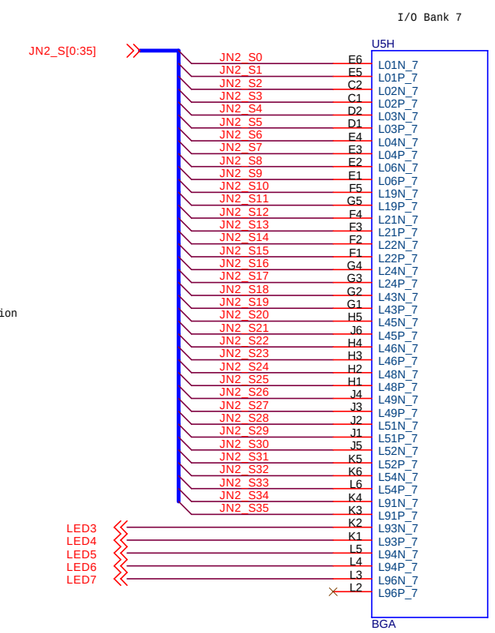

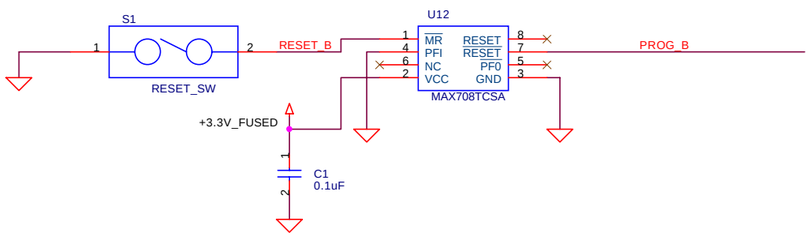

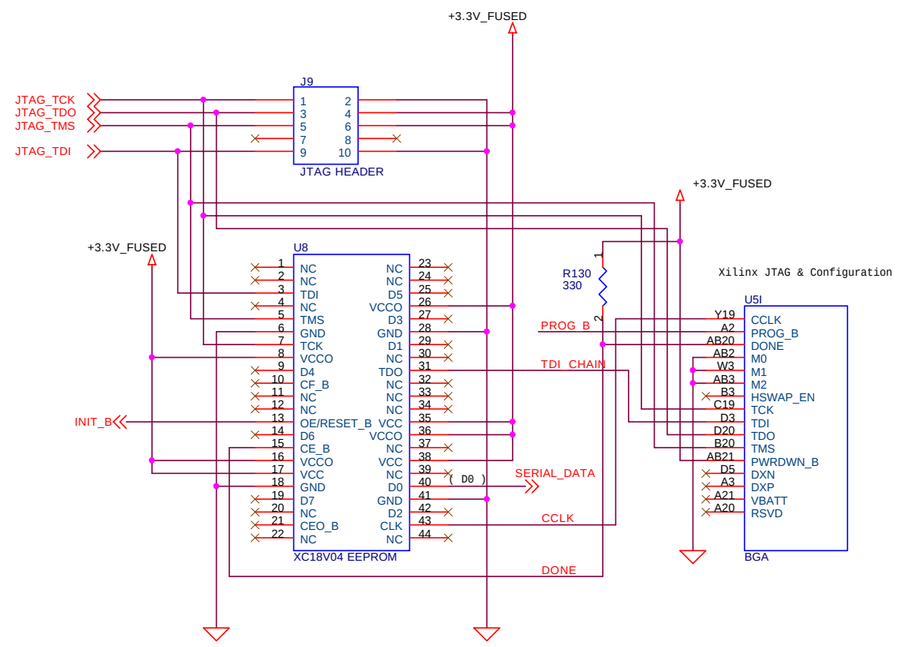

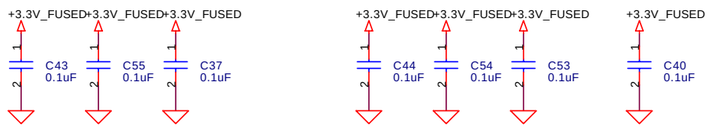

Title	Programmable Mezzanine Card Rev 1.1
Size	Document Number: Brad Hall / Matt Kindschi / Jeff Andresen — Rev <RevC
Date: Monday, June 09, 2003	Sheet 4 of 6

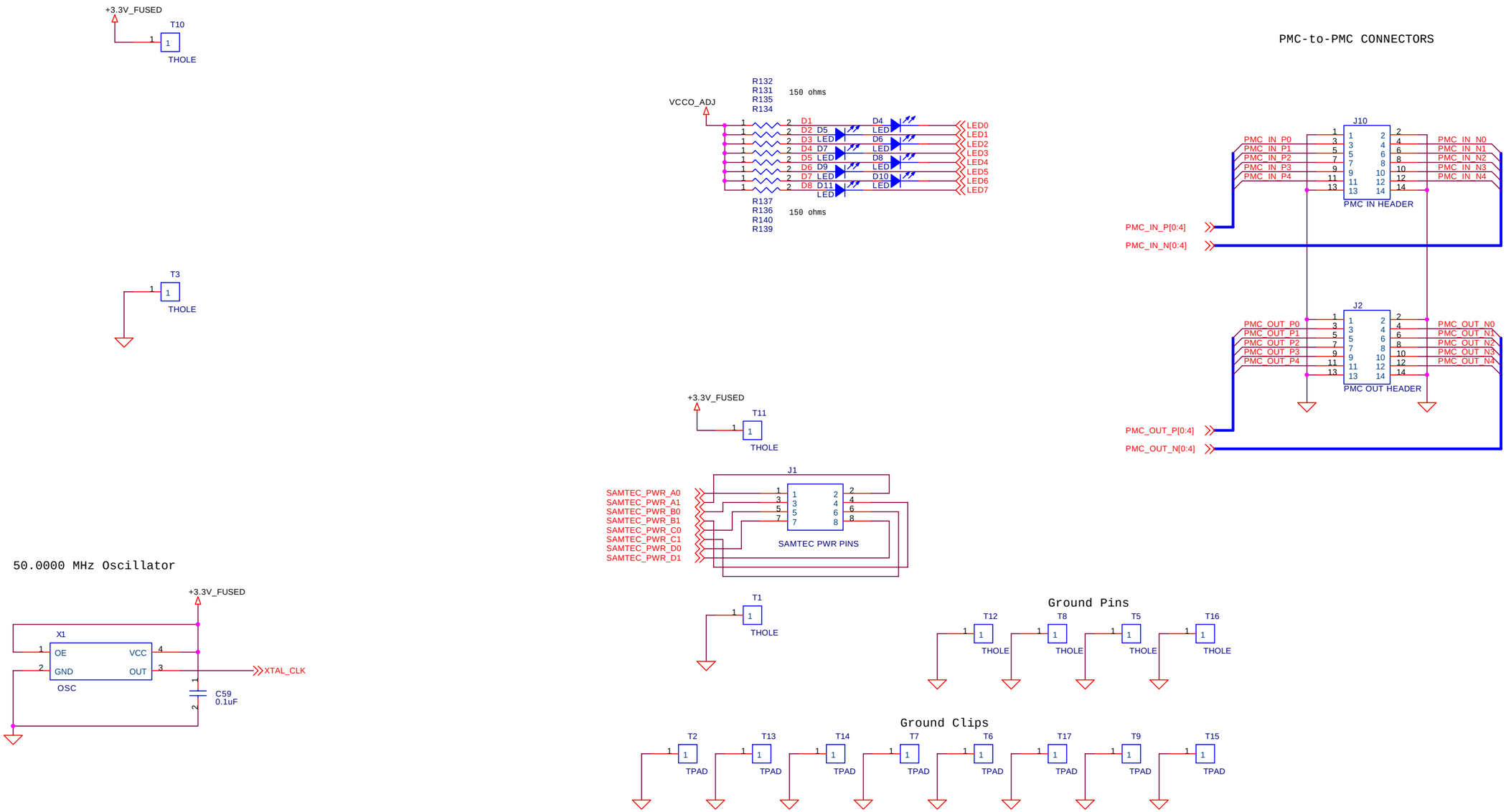

Title	Programmable Mezzanine Card Rev 1.1
Size	Document Number: Brad Hall / Matt Kindschi / Jeff Andresen
Rev	<RevC
Date: Thursday, June 05, 2003	Sheet 5 of 6

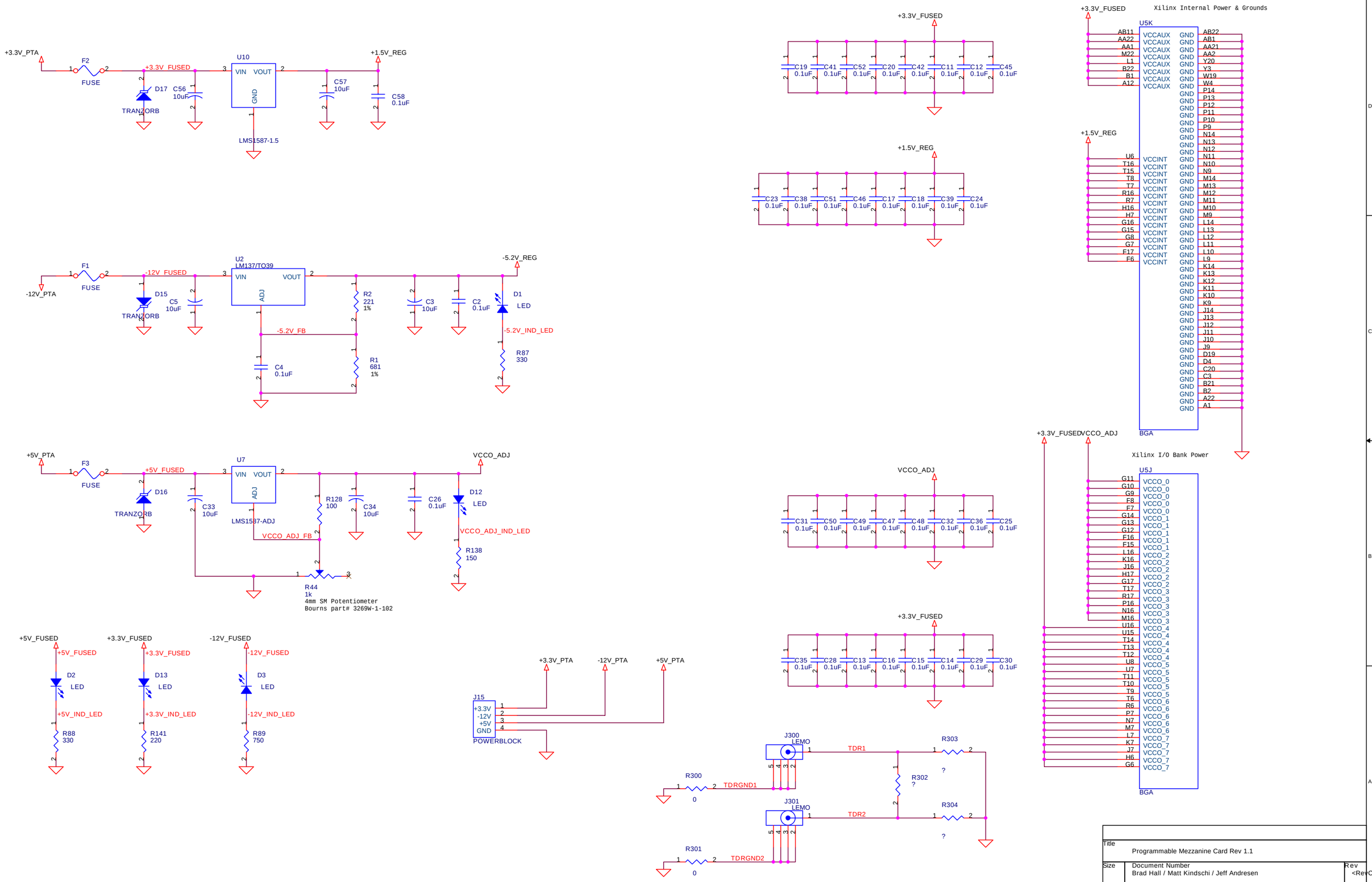

Title: Programmable Mezzanine Card Rev 1.1

Size | Document Number: Brad Hall / Matt Kindschi / Jeff Andresen | Rev: <RevC

Date: Monday, June 09, 2003 | Sheet 6 of 6

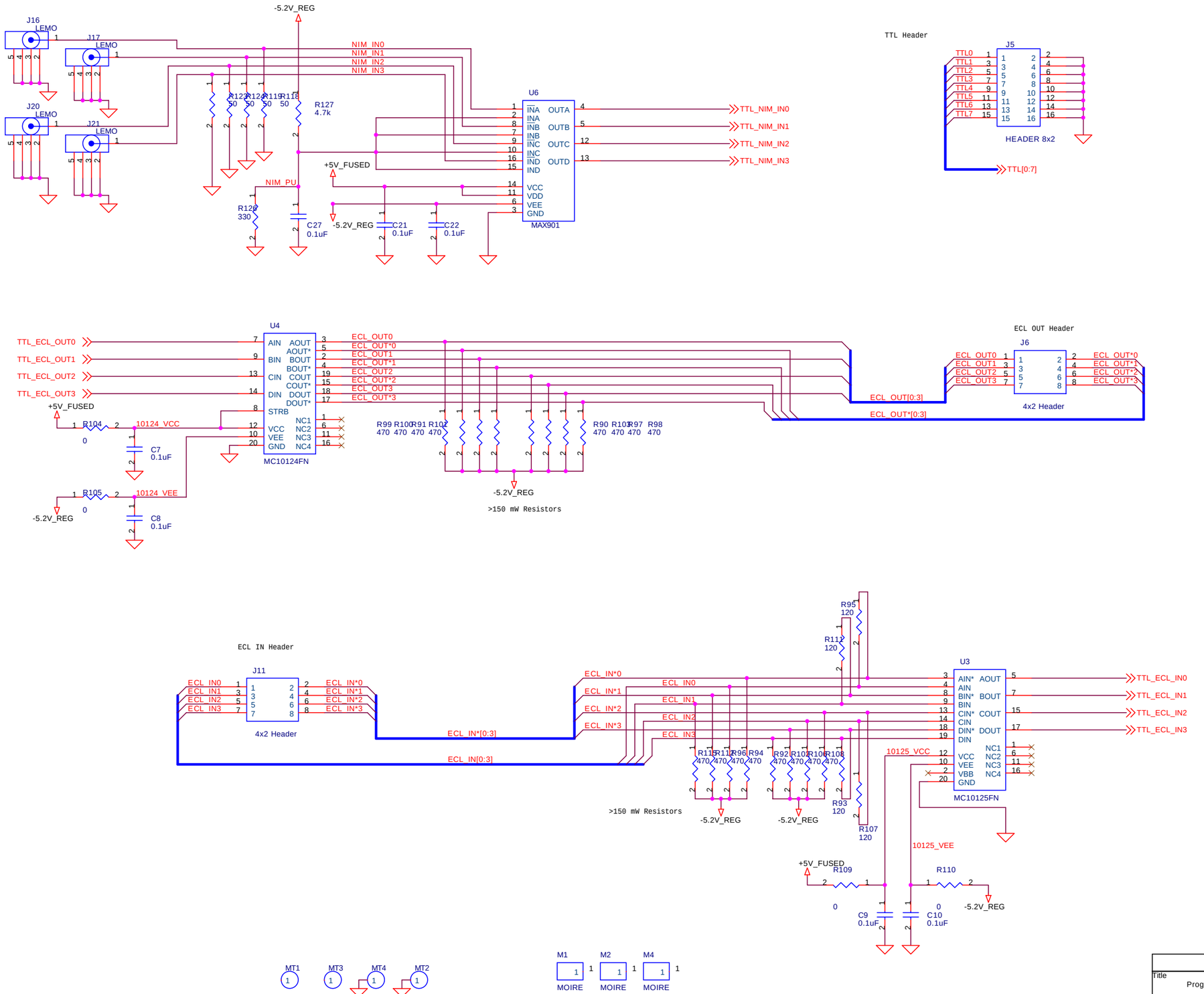

Title	Programmable Mezzanine Card Rev 1.1
Size	Document Number Brad Hall / Matt Kindschi / Jeff Andresen
Rev	<RevCode>
Date: Thursday, June 05, 2003	Sheet 1 of 6

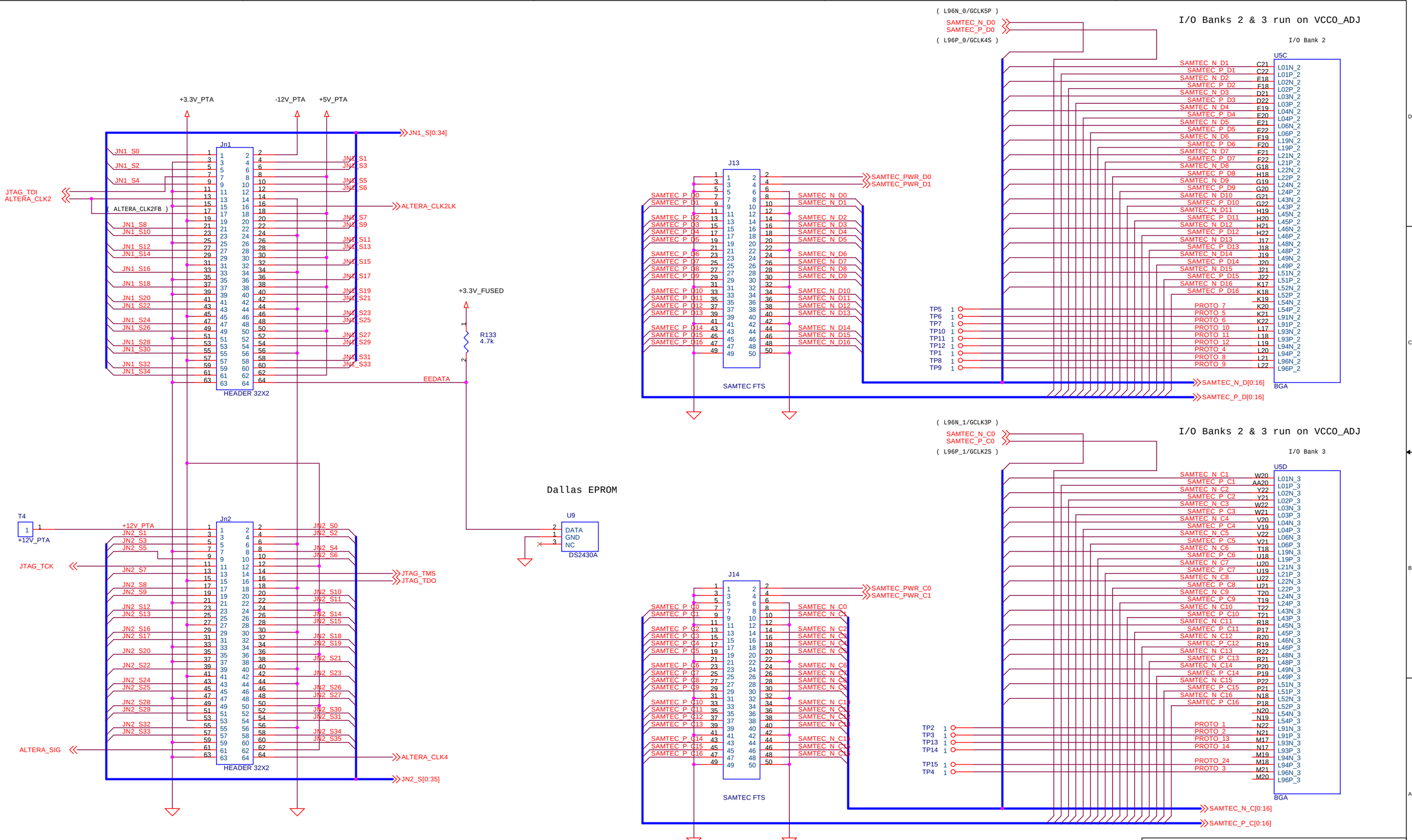

Title	Programmable Mezzanine Card Rev 1.1
Size	Document Number: Brad Hall / Matt Kindschi / Jeff Andresen — Rev 1
Date: Thursday, June 05, 2003	Sheet 2 of 6

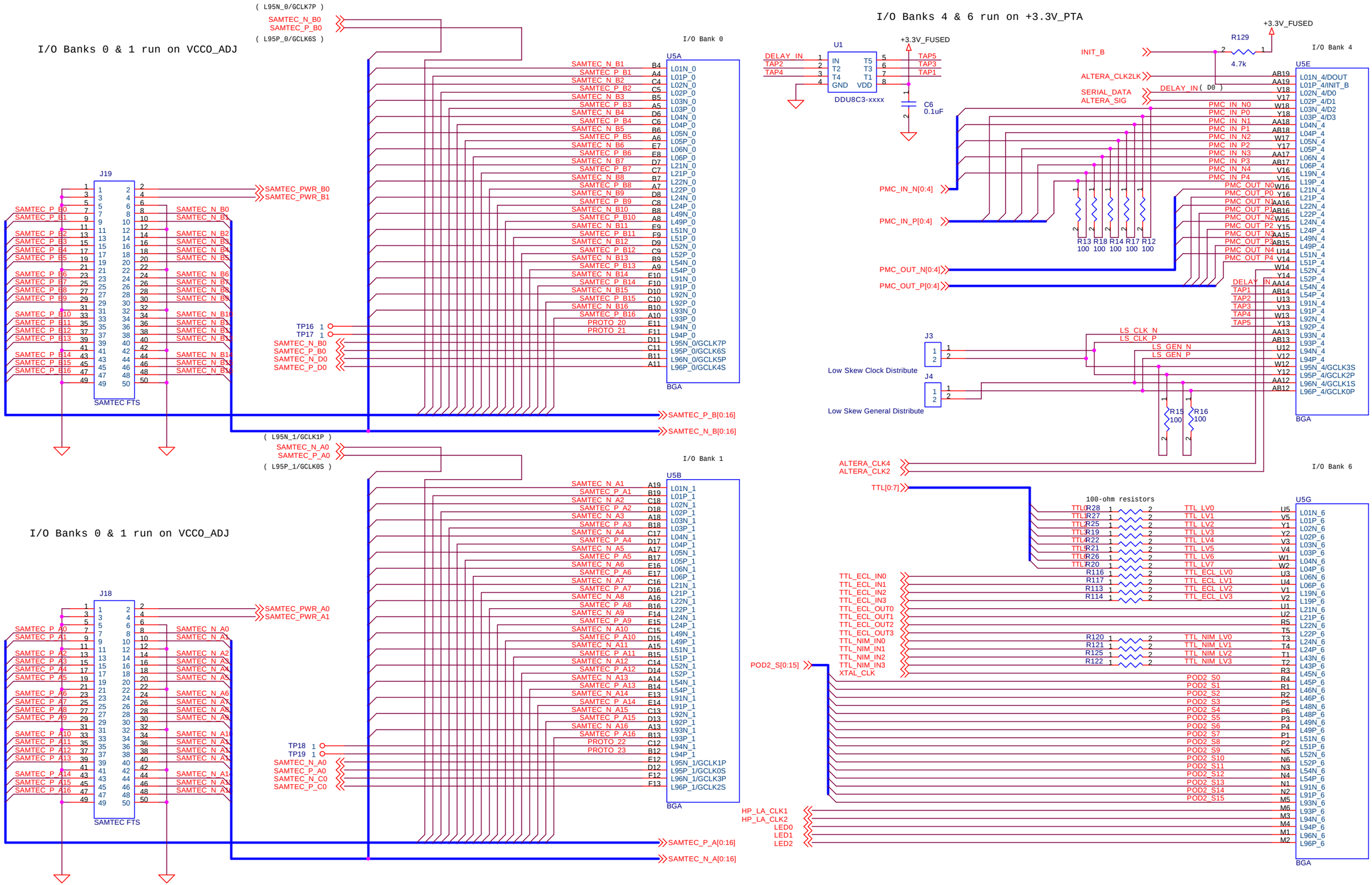

Title: Programmable Mezzanine Card Rev 1.1

Size | Document Number: Brad Hall / Matt Kindschi / Jeff Andresen | Rev: <RevC

Date: Thursday, June 05, 2003 | Sheet 3 of 6

Samtec Termination Resistors

All Termination Resistors are 100 ohms.

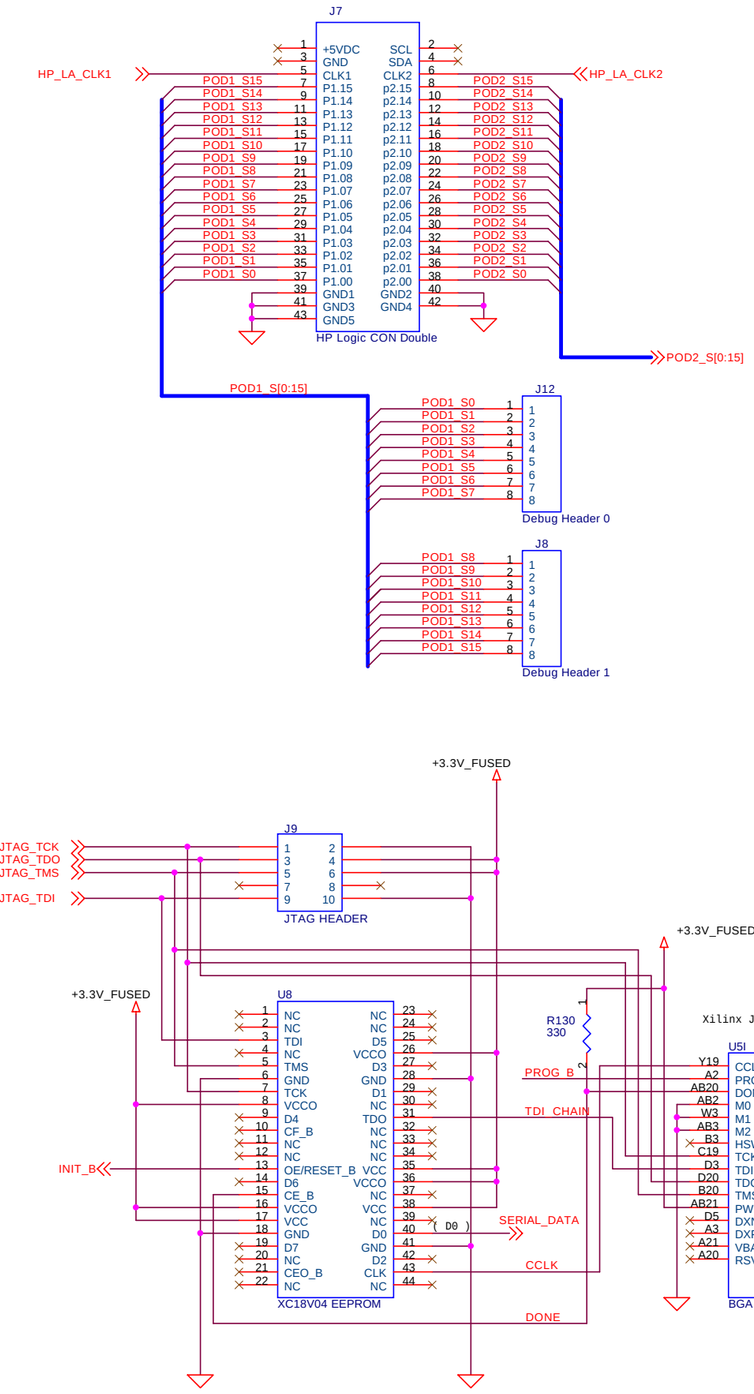

I/O Banks 5 & 7 run on +3.3V_PTA

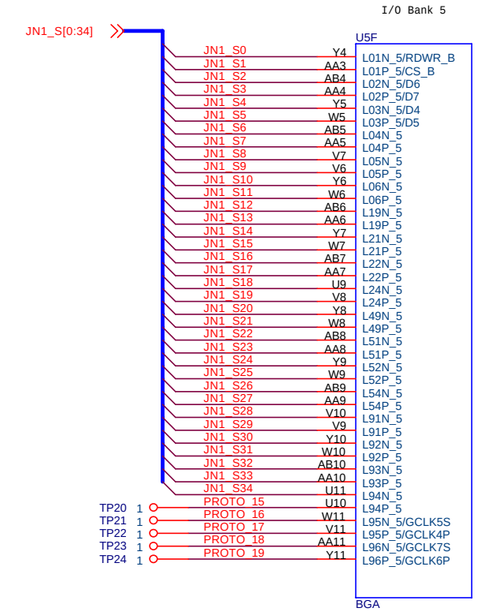

I/O Banks 5 & 7 run on +3.3V_PTA

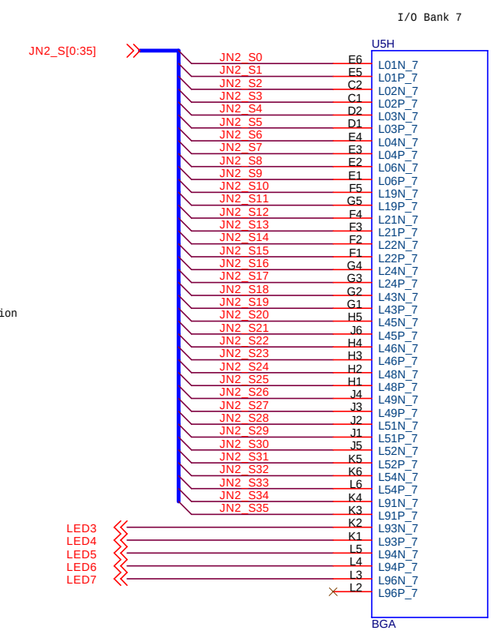

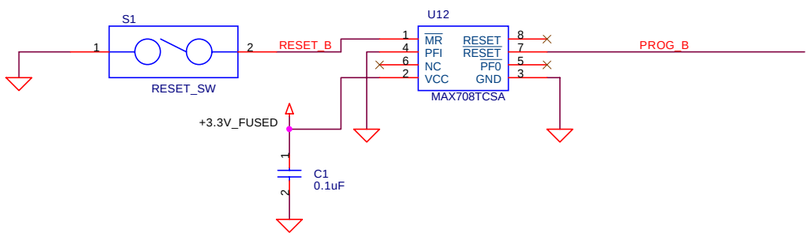

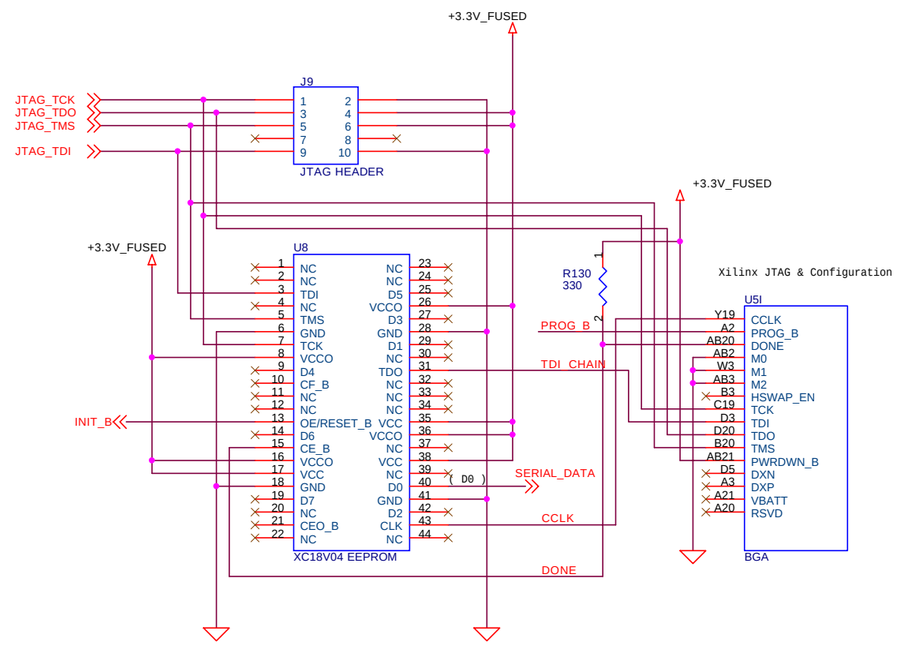

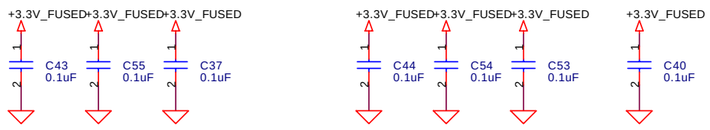

Title	Programmable Mezzanine Card Rev 1.1
Size	Document Number: Brad Hall / Matt Kindschi / Jeff Andresen — Rev <RevC
Date: Monday, June 09, 2003	Sheet 4 of 6

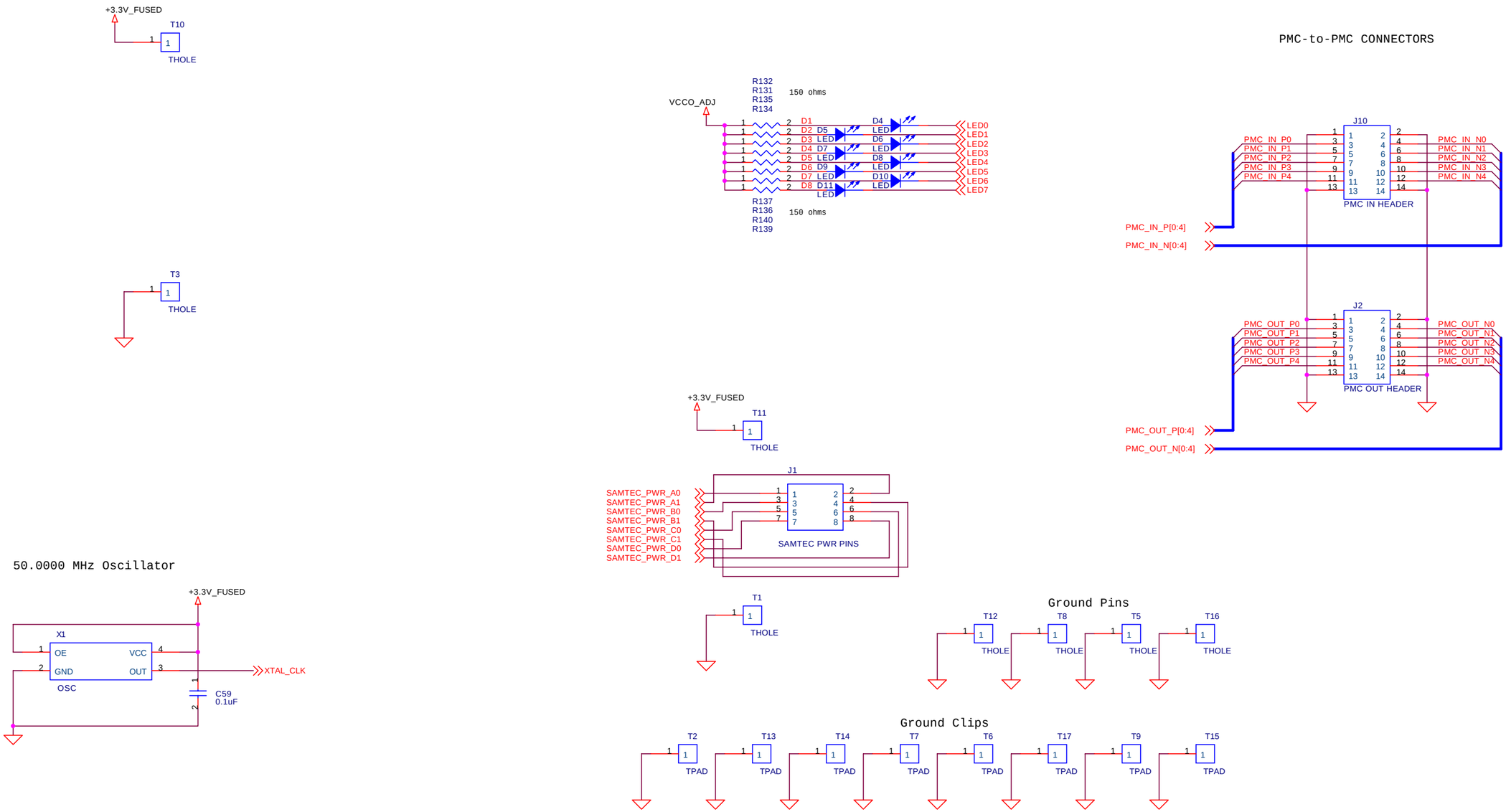

Title	Programmable Mezzanine Card Rev 1.1
Size	Document Number: Brad Hall / Matt Kindschi / Jeff Andresen
Rev	<RevC
Date: Thursday, June 05, 2003	Sheet 5 of 6

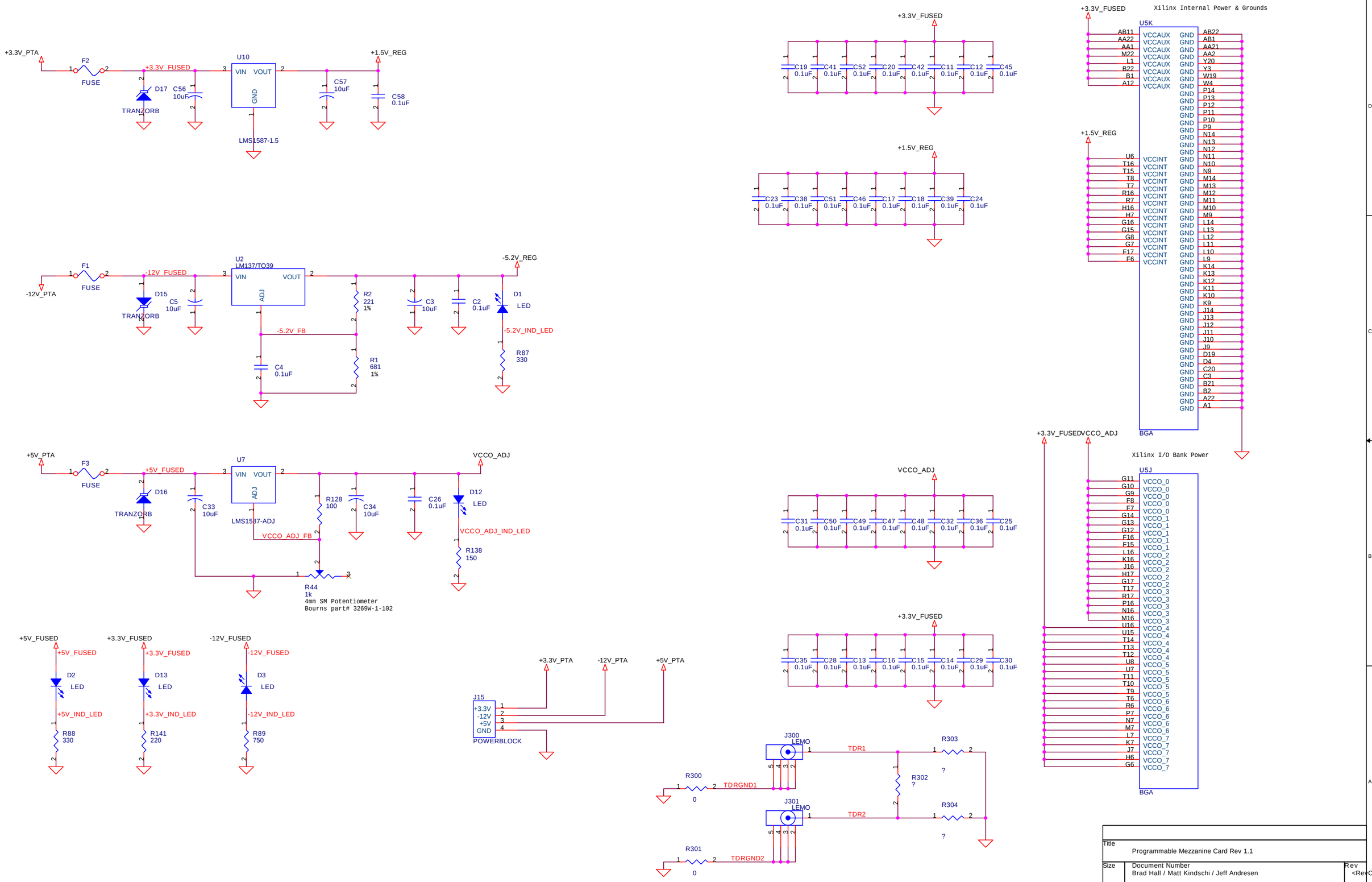

Title: Programmable Mezzanine Card Rev 1.1

Size | Document Number: Brad Hall / Matt Kindschi / Jeff Andresen | Rev: <RevC

Date: Monday, June 09, 2003 | Sheet 6 of 6