ITEM NUMBER	NUMBER REQD	DESCRIPTION

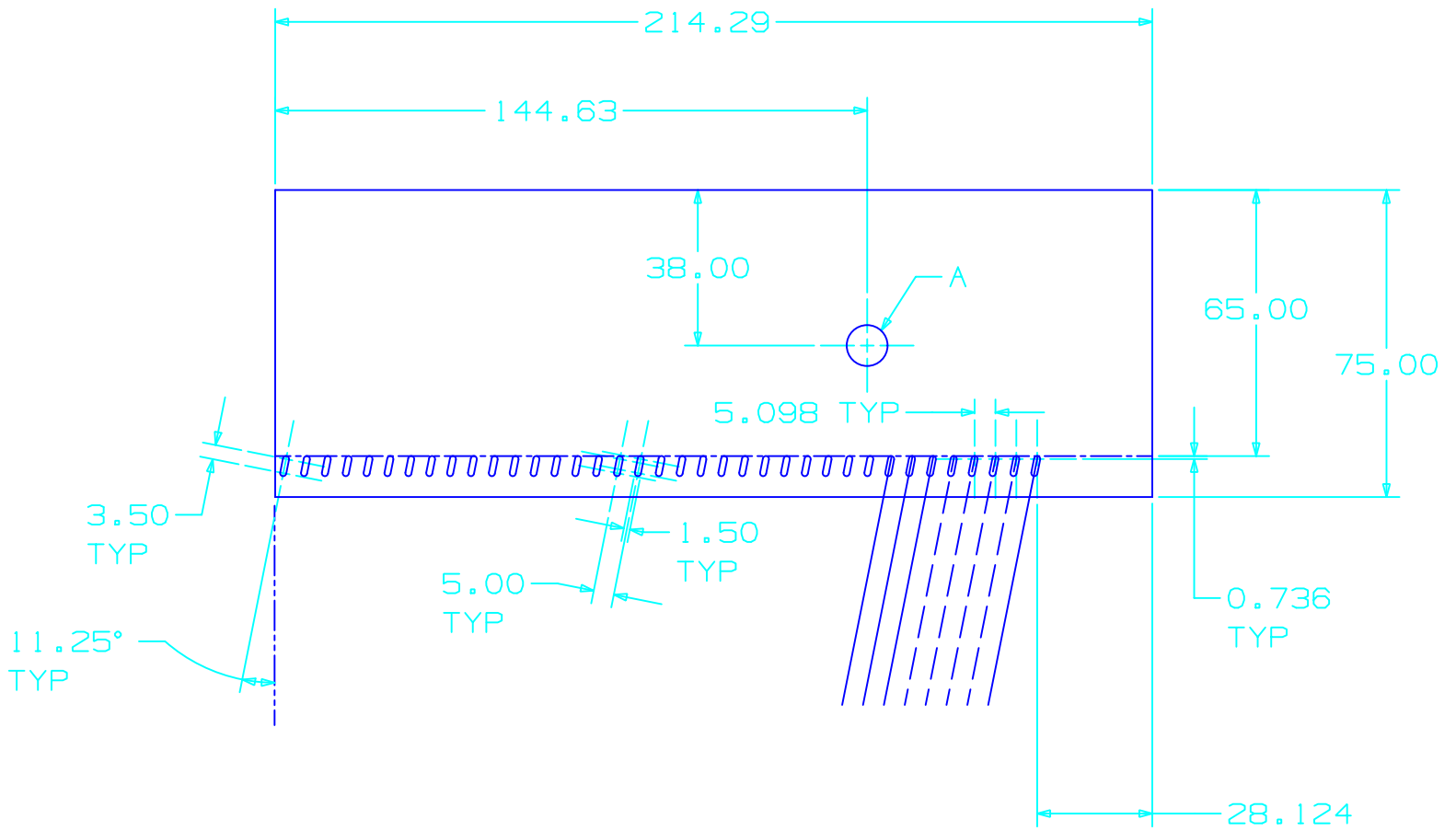

ALL DIMENSIONS IN MILLIMETERS

"A" HOLE DIA. 10.0 mm, 5/16" DIA BOLT

OVERALL THICKNESS OF PC CARD .0625"
16 CHANNEL WIRE TERMINATION CARD

REV	CLASS REVIEW	REVISIONS	DATE	CHANGED BY	CHECKED BY	APPROVED BY
B		INITIAL RELEASE	3/00			WALT
A		ORIGINAL ISSUE				

CLASSIFICATION:
DRAWING: PART: TITLE BLOCK:

	SIGNATURE	DATE	GROUP
ORIG	WALT	3/00	P-25
DRAWN			
CHECKED			
PROJ ENGR			
APPROVED			
RELEASED			

LOS ALAMOS
LOS ALAMOS NATIONAL LABORATORY
LOS ALAMOS, NEW MEXICO, 87545

TOLERANCE-(UNLESS OTHERWISE NOTED)
X=± 0.XX =± .16 ANG=± .25
.X=± 0.XXX=± .025 FIN= 3.2

TITLE STATION 2 NORTH ANODE PLANE, FRONT WIRE TERM CARD #6

PHENIX DWG NO. 002-0212-240B

SCALE	TOTAL SHEETS	DRAWING NO.	SIZE	NO.
1 : 1		126Y-267793	C	2B6