ITEM NUMBER	NUMBER REQD	DESCRIPTION

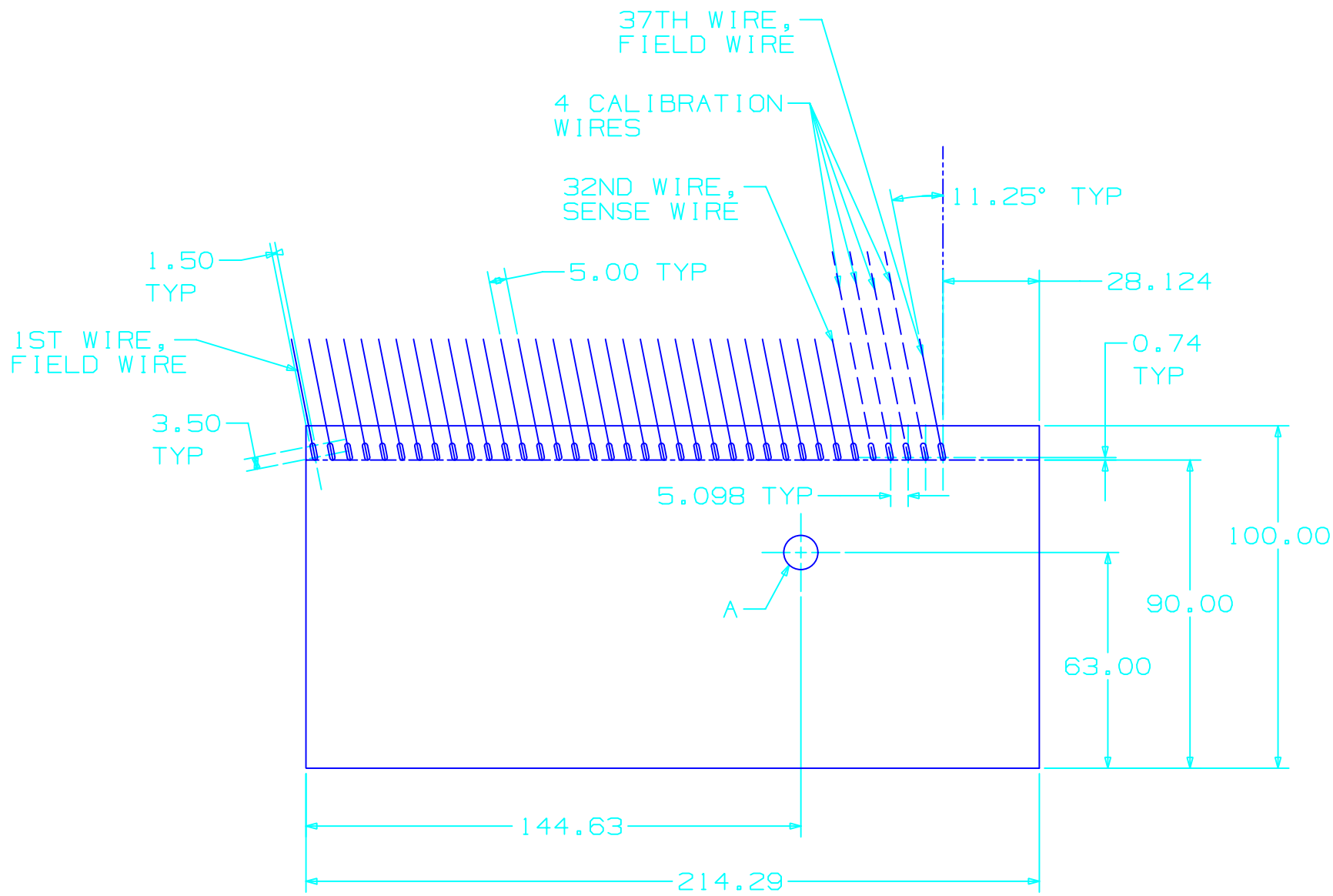

ALL DIMENSIONS IN MILLIMETERS

REV	CLASS REVIEW	REVISIONS	DATE	CHANGED BY	CHECKED BY	APPROVED BY
B		INITIAL RELEASE	3/00			WALT
A		ORIGINAL ISSUE				

"A" HOLE DIA. .375", 5/16 DIA BOLT

OVERALL THICKNESS OF PC CARD .0625"
16 CHANNEL READ OUT

CLASSIFICATION:
DRAWING: PART: TITLE BLOCK:

	SIGNATURE	DATE	GROUP
ORIG	WALT	3/00	P-25
DRAWN			
CHECKED			
PROJ ENGR			
APPROVED			
RELEASED			

LOS ALAMOS
LOS ALAMOS NATIONAL LABORATORY
LOS ALAMOS, NEW MEXICO, 87545

TOLERANCE-(UNLESS OTHERWISE NOTED)
X=± ____ 0.XX =± .16 ANG=± .25
.X=± ____ 0.XXX=± .025 FIN= 3.2

TITLE STATION 2 NORTH ANODE PLANE FRONT READ OUT PC#6

PHENIX DWG NO. 002-0212-240B

SCALE	TOTAL SHEETS	DRAWING NO.	SIZE	NO.
1:1		126Y-267793	C	1B9