ITEM NUMBER	NUMBER REQD	DESCRIPTION

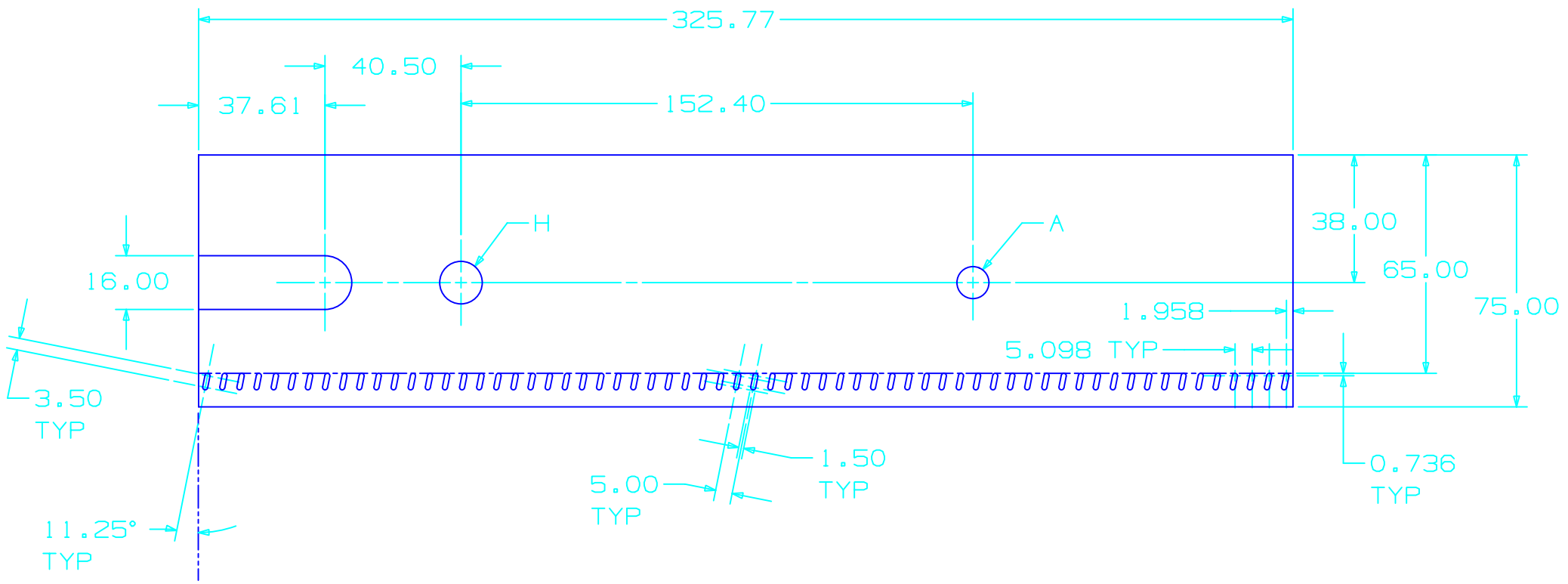

"A" HOLE DIA. 10.0 mm, 5/16" DIA BOLT
"H" HOLE DIA. 13.0 mm, .500" DIA BRASS PIN

OVERALL THICKNESS OF PC CARD .0625"
32 CHANNEL WIRE TERMINATION CARD

ALL DIMENSIONS IN MILLIMETERS

REV	CLASS REVIEW	REVISIONS	DATE	CHANGED BY	CHECKED BY	APPROVED BY
B		INITIAL RELEASE	3/00			WALT
A		ORIGINAL ISSUE				

CLASSIFICATION:
DRAWING: PART: TITLE BLOCK:

	SIGNATURE	DATE	GROUP
ORIG	WALT	3/00	P-25
DRAWN			
CHECKED			
PROJ ENGR			
APPROVED			
RELEASED			

LOS ALAMOS
LOS ALAMOS NATIONAL LABORATORY
LOS ALAMOS, NEW MEXICO, 87545

TOLERANCE-(UNLESS OTHERWISE NOTED)
X=±____ 0.XX =±.16 ANG=±.25
.X=±____ 0.XXX=±.025 FIN= 3.2

TITLE STATION 2 NORTH ANODE PLANE, WIRE TERM. CARD #2

PHENIX DWG NO.002-0212-240B/250B

SCALE	TOTAL SHEETS	DRAWING NO.	SIZE	NO.
1:1		126Y-267793	C	2B2