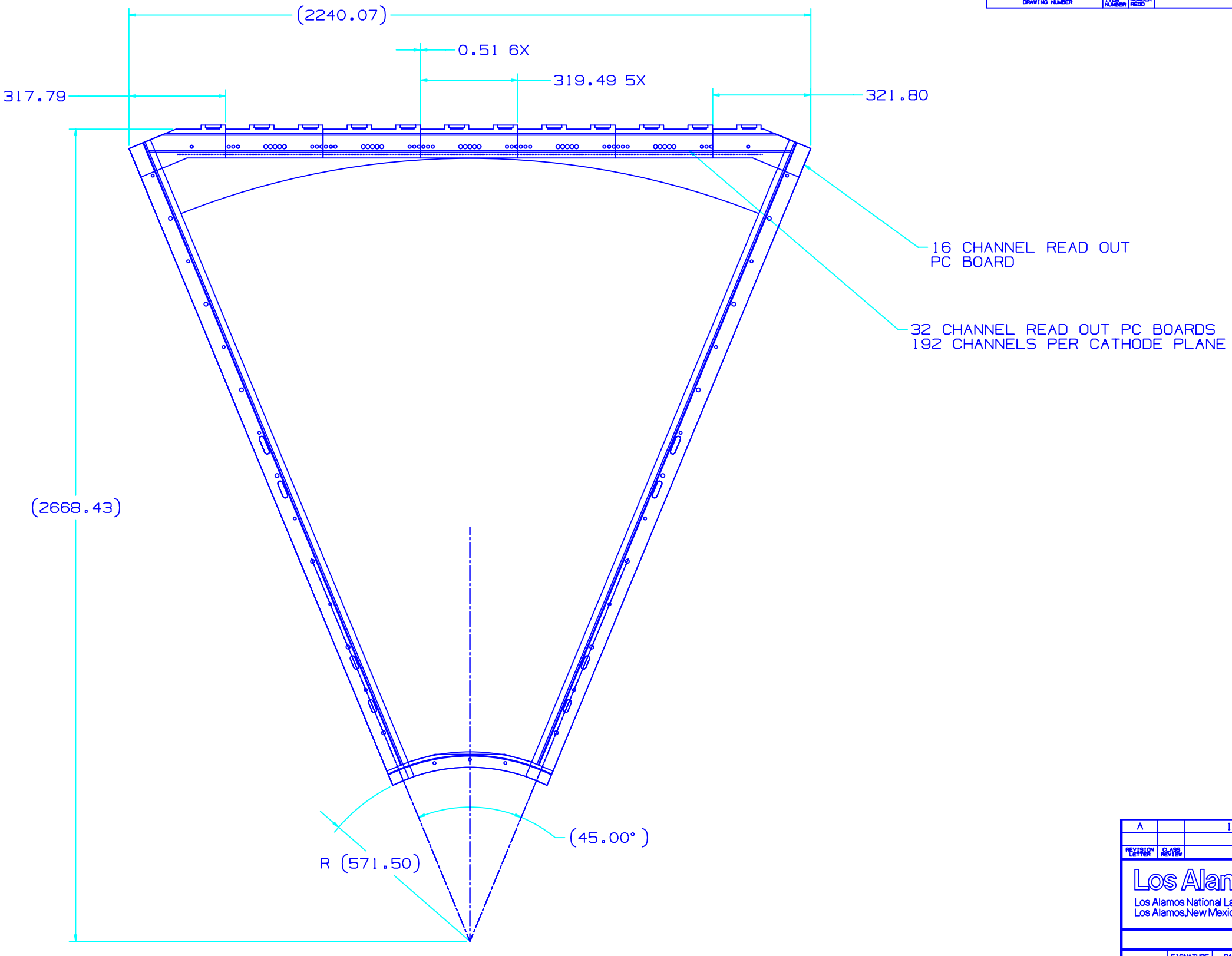

DRAWING NUMBER	ITEM NUMBER	NUMBER REQD	DESCRIPTION

REVISION LETTER	CLASS REVIEW	REVISIONS	DATE	CHANGED BY	CHECKED BY	APPROVED BY
A		INITIAL RELEASE	3/00			WALT
		ORIGINAL ISSUE				

Los Alamos
Los Alamos National Laboratory
Los Alamos,New Mexico 87545

CLASSIFICATION OF DRAWING: UNC
PART: UNC TITLE BLOCK: UNC

TITLE
NORTH STA 2
REAR OCTANT
CATHODE PLANE

	SIGNATURE	DATE	GROUP
ORIGINATED	WALT	1/00	P-25
DRAWN			
CHECKED			
PROJ. ENGR.			
APPROVED			
RELEASED			

PHENIX DRAWING NO. 002-0212-250C

TOLERANCE-(UNLESS OTHERWISE NOTED)
X=± 0.XX =± .13 ANGULAR=± .25
0.X=± 0.XXX=± .025 FINISH = 3.2

SCALE	TOTAL SHEETS	DRAWING NO.	SHEET SIZE	NO.
.15		126Y-267793	D	1C