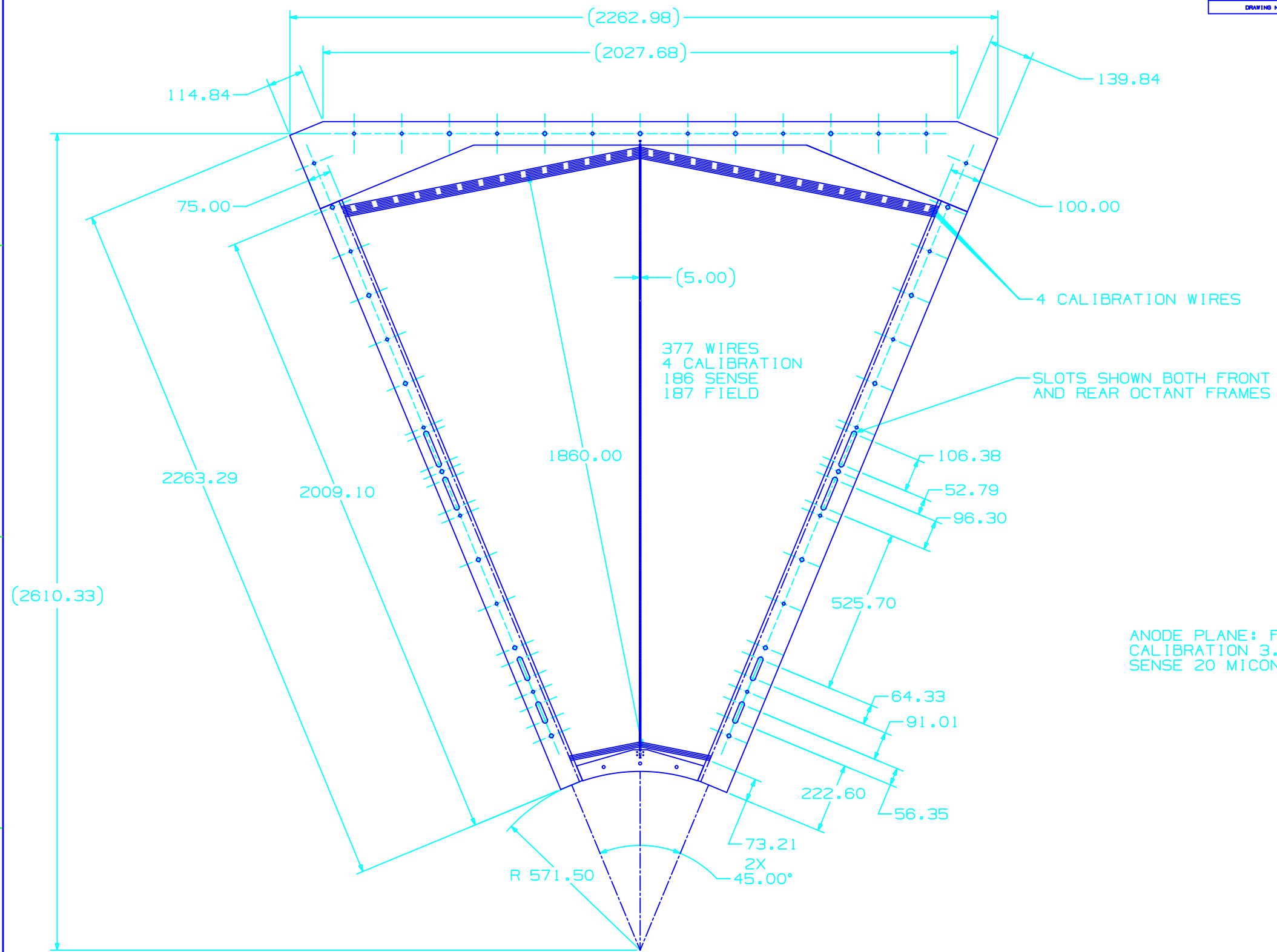

ANODE PLANE: FIELD 3.0 MIL GOLD PLATED CU-BE WIRE
CALIBRATION 3.0 MIL GOLD PLATED CU-BE
SENSE 20 MICON GOLD PLATED TUNGSTON

AL DIMENSIONS IN MILLIMETERS

DRAWING NUMBER	ITEM NUMBER	NUMBER REQD	DESCRIPTION

REVISION LETTER	CLASS REVIEW	REVISIONS	DATE	CHANGED BY	CHECKED BY	APPROVED BY
A		INITIAL RELEASE	3/00			WALT
		ORIGINAL ISSUE				

Los Alamos
Los Alamos National Laboratory
Los Alamos, New Mexico 87545

CLASSIFICATION OF DRAWING: UNC
PART: UNC TITLE BLOCK: UNC

TITLE
STA 2 NORTH
REAR OCTANT
ANODE ASSY

	SIGNATURE	DATE	GROUP
ORIGINATED	WALT	2/00	P-25
DRAWN			
CHECKED			
PROJ. ENGR.			
APPROVED			
RELEASED			

PHENIX DRAWING NO. 002-0212-250A

TOLERANCE-(UNLESS OTHERWISE NOTED)
X=± O.XX =± .13 ANGULAR=± .25
O.X=± .125 O.XXX=± .025 FINISH = 3.2

SCALE	TOTAL SHEETS	DRAWING NO.	SIZE	SHEET NO.
.15		126Y-267793	D	1A