DRAWING NUMBER	ITEM NUMBER	NUMBER REQD	DESCRIPTION

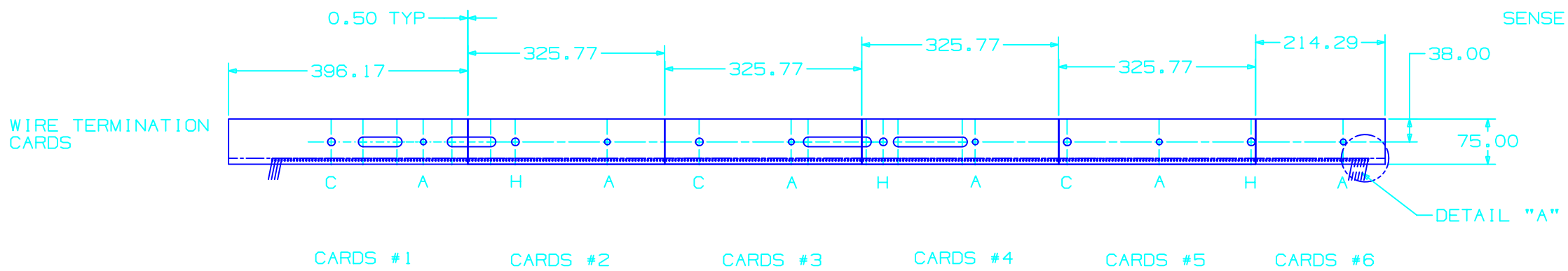

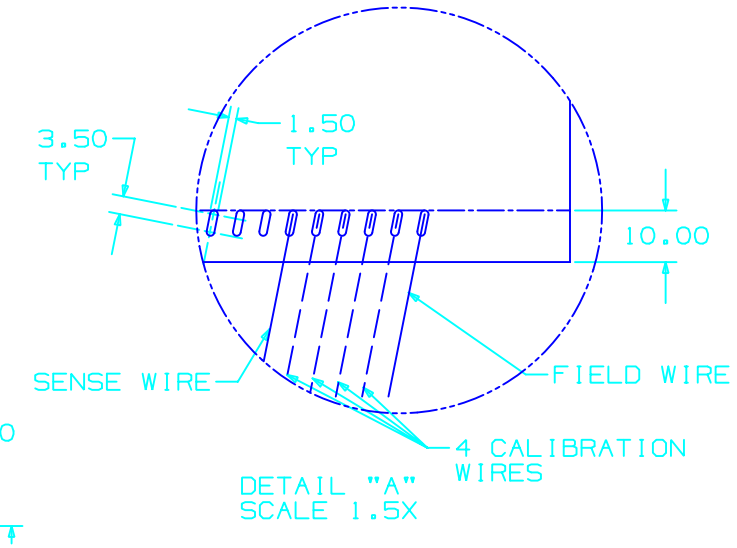

(VERTEX END)

"A" HOLE DIAMETER .375"
"C" HOLE DIAMETER .500"
"H" HOLE DIAMETER .501"
ALL SLOTS ARE 16.mm WIDE,
ENDS HAVE A 8.0mm RADIUS

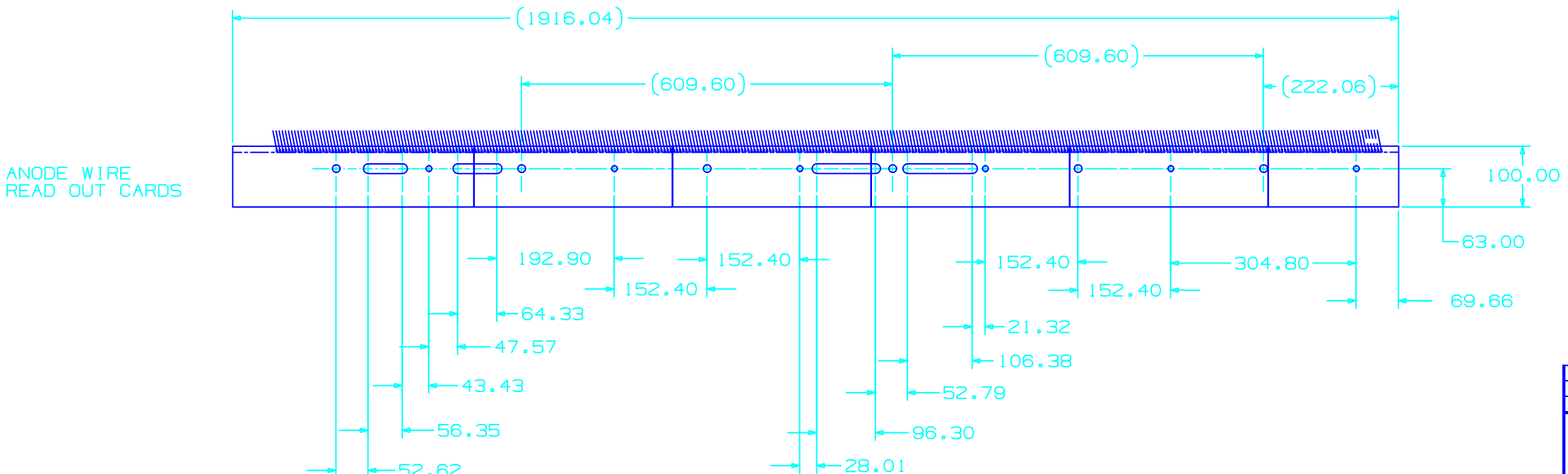

ALL DIMENSIONS IN MILLIMETERS

REVISION LETTER	CLASS REVIEW	REVISIONS	DATE	CHANGED BY	CHECKED BY	APPROVED BY
A		INITIAL RELEASE	2/00			WALT
		ORIGINAL ISSUE				

Los Alamos
Los Alamos National Laboratory
Los Alamos,New Mexico 87545

CLASSIFICATION OF DRAWING: UNC
PART: UNC TITLE BLOCK: UNC

TITLE
STATION 2 NORTH
FRONT OCTANT
ANODE PC BOARDS
ENVELOPE

	SIGNATURE	DATE	GROUP
ORIGINATED	WALT	2/00	P-25
DRAWN			
CHECKED			
PROJ. ENGR.			
APPROVED			
RELEASED			

PHENIX DRAWING NO. 002-0212-240B

TOLERANCE-(UNLESS OTHERWISE NOTED)
X=± O.XX =± .13 ANGULAR=± .25
O.X=± O.XXX=± .125 FINISH = 3.2

SCALE	TOTAL SHEETS	DRAWING NO.	SIZE	SHEET NO.
.25		126Y-267794	D	1B