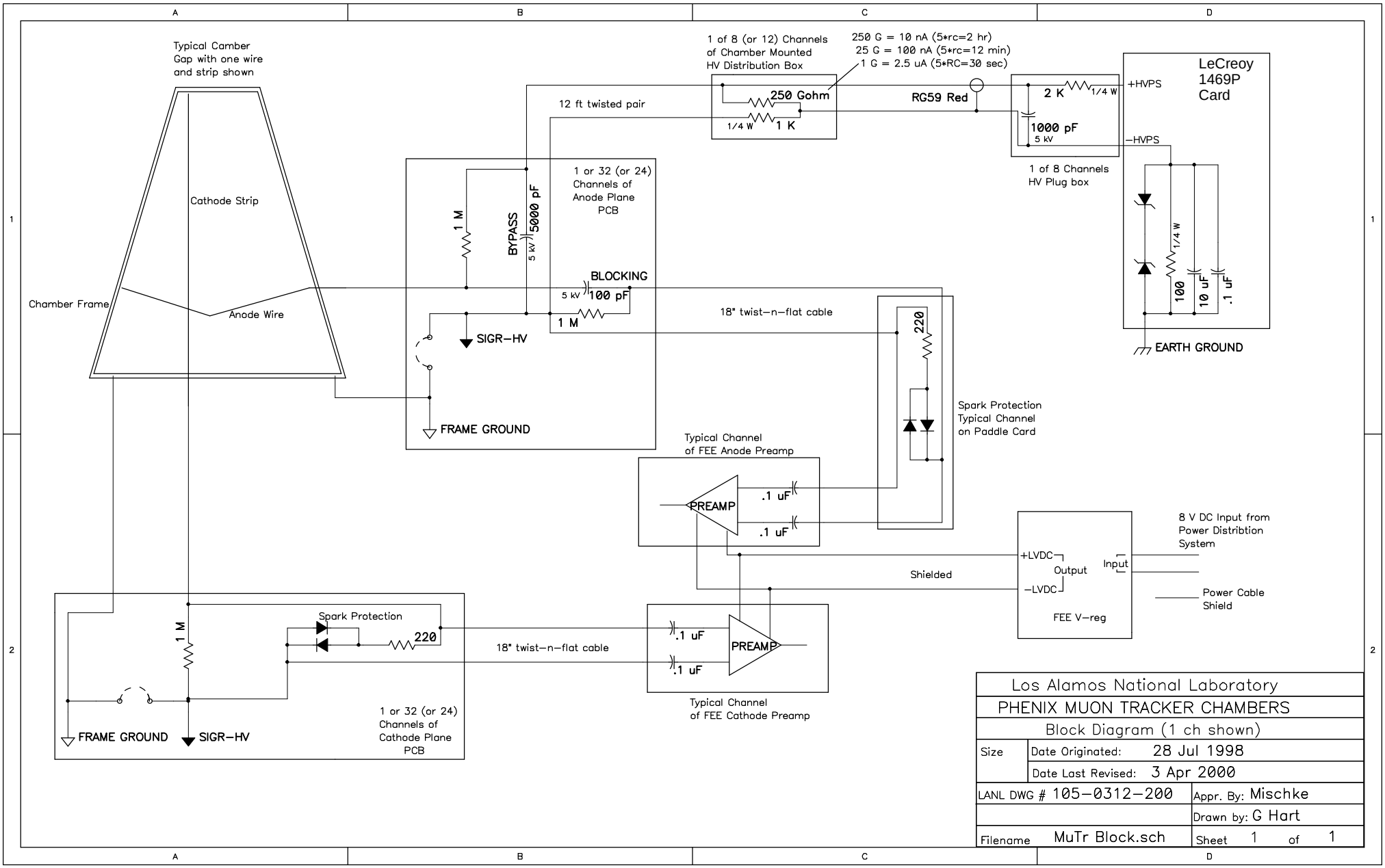

Los Alamos National Laboratory		
PHENIX MUON TRACKER CHAMBERS		
Block Diagram (1 ch shown)		
Size	Date Originated: 28 Jul 1998	
	Date Last Revised: 3 Apr 2000	
LANL DWG # 105−0312−200		Appr. By: Mischke
		Drawn by: G Hart
Filename MuTr Block.sch		Sheet 1 of 1

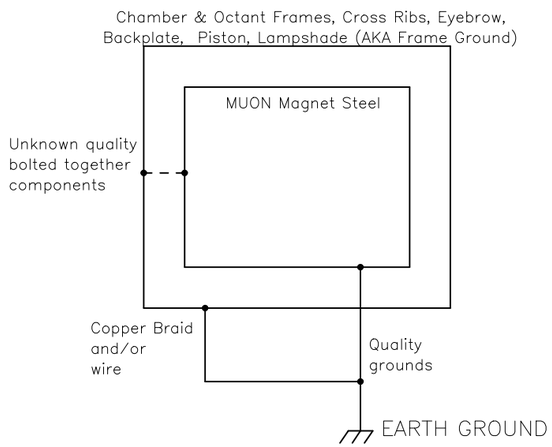

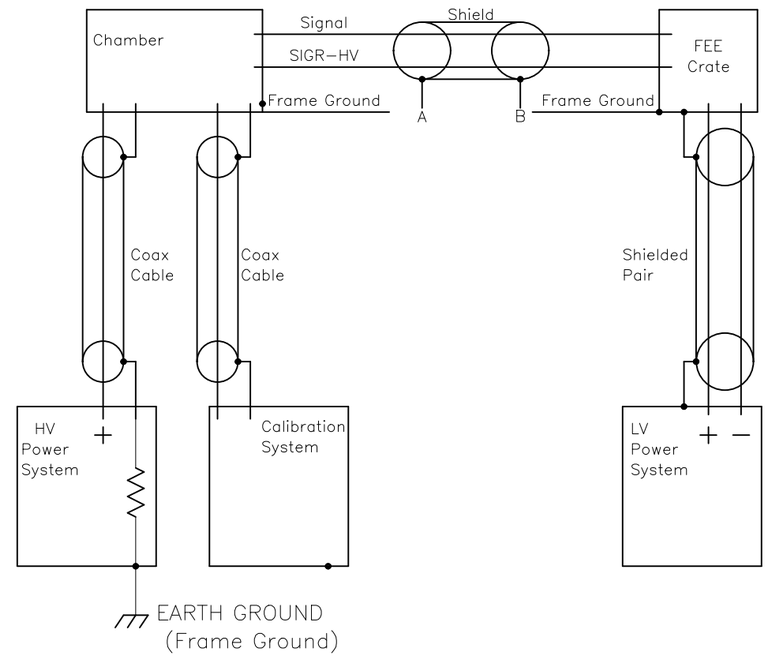

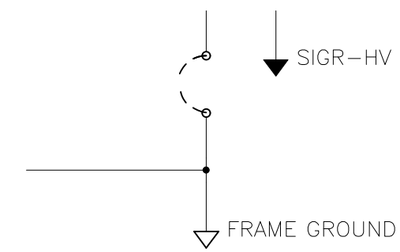

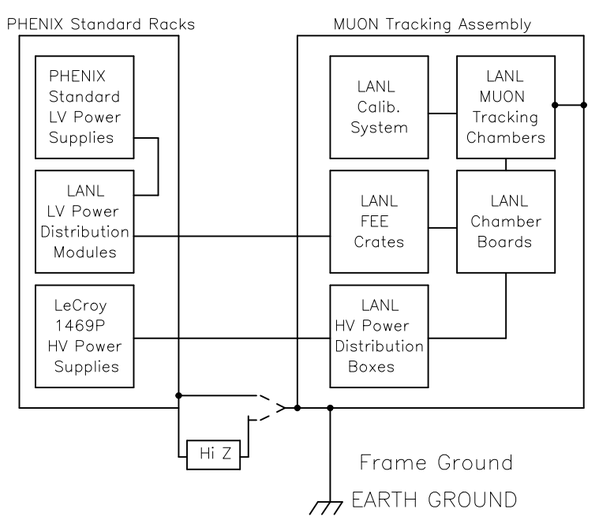

Last Revised: 18 Oct 1999

Title: PHENIX MUON TRACKER CHAMBERS		
Size: B	Number: Grounding	Rev
Date: 18 Oct 1999	Drawn by: G Hart	
Filename: MuTr Grounding	Sheet of	

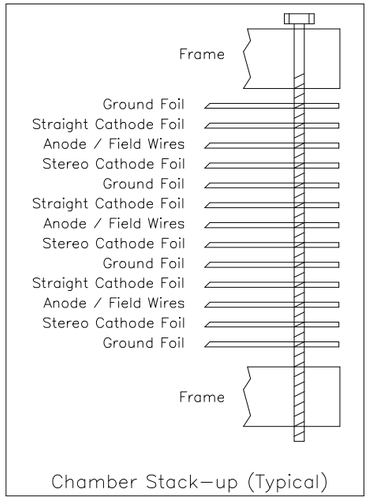

Chamber Stack–up (Typical)

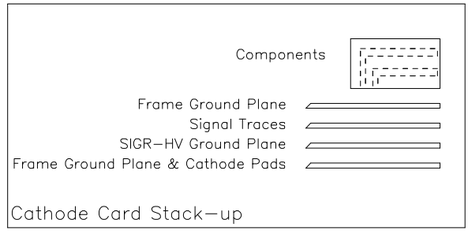

Cathode Card Stack–up

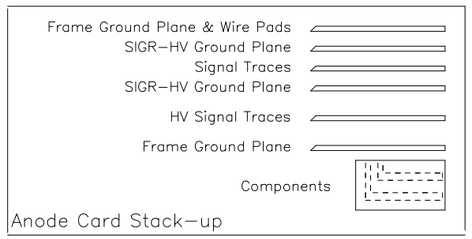

Anode Card Stack–up

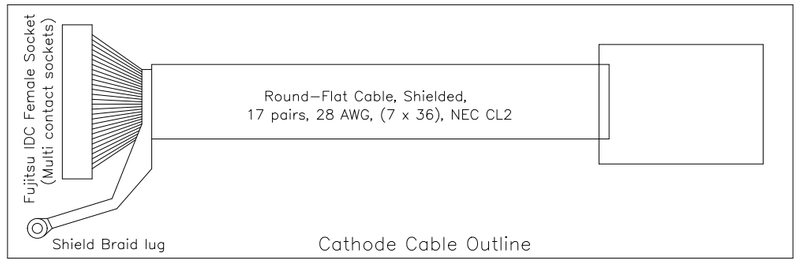

Cathode Cable Outline

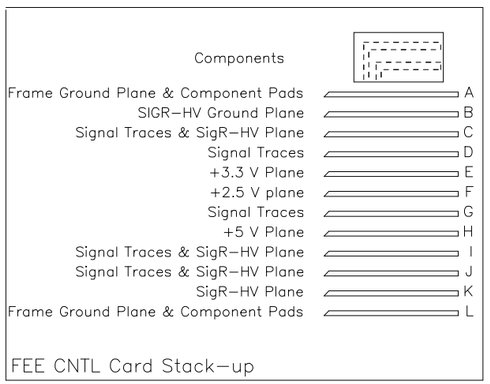

FEE CNTL Card Stack–up

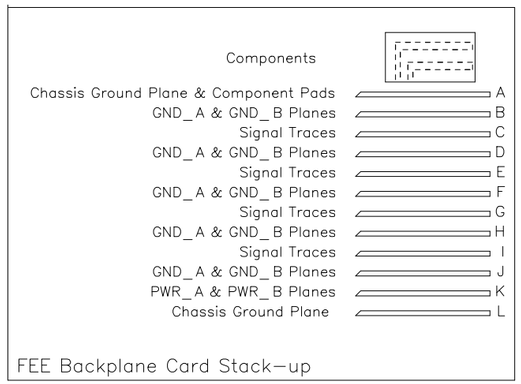

FEE Backplane Card Stack–up

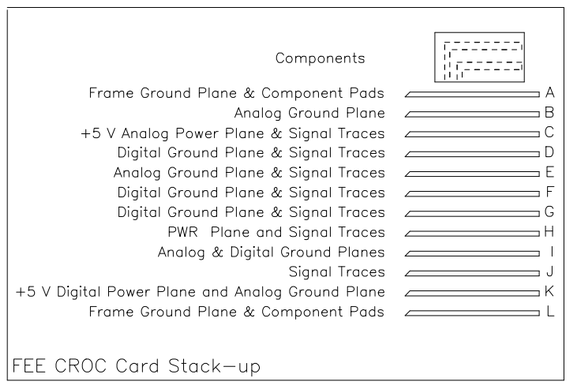

FEE CROC Card Stack–up

Los Alamos National Laboratory		
Title: MuTr Electronics Block Diagram		
Physical Structure Drawings		
Size	Date Originated: 14 Feb 2001	
	Last Revised: 5 March 2000	
LANL DWG #:		Approved By:M. Leitch
PHENIX #:		Drawn by: G. Hart
Filename: St 2 S Block Diagram.sch		Sheet of

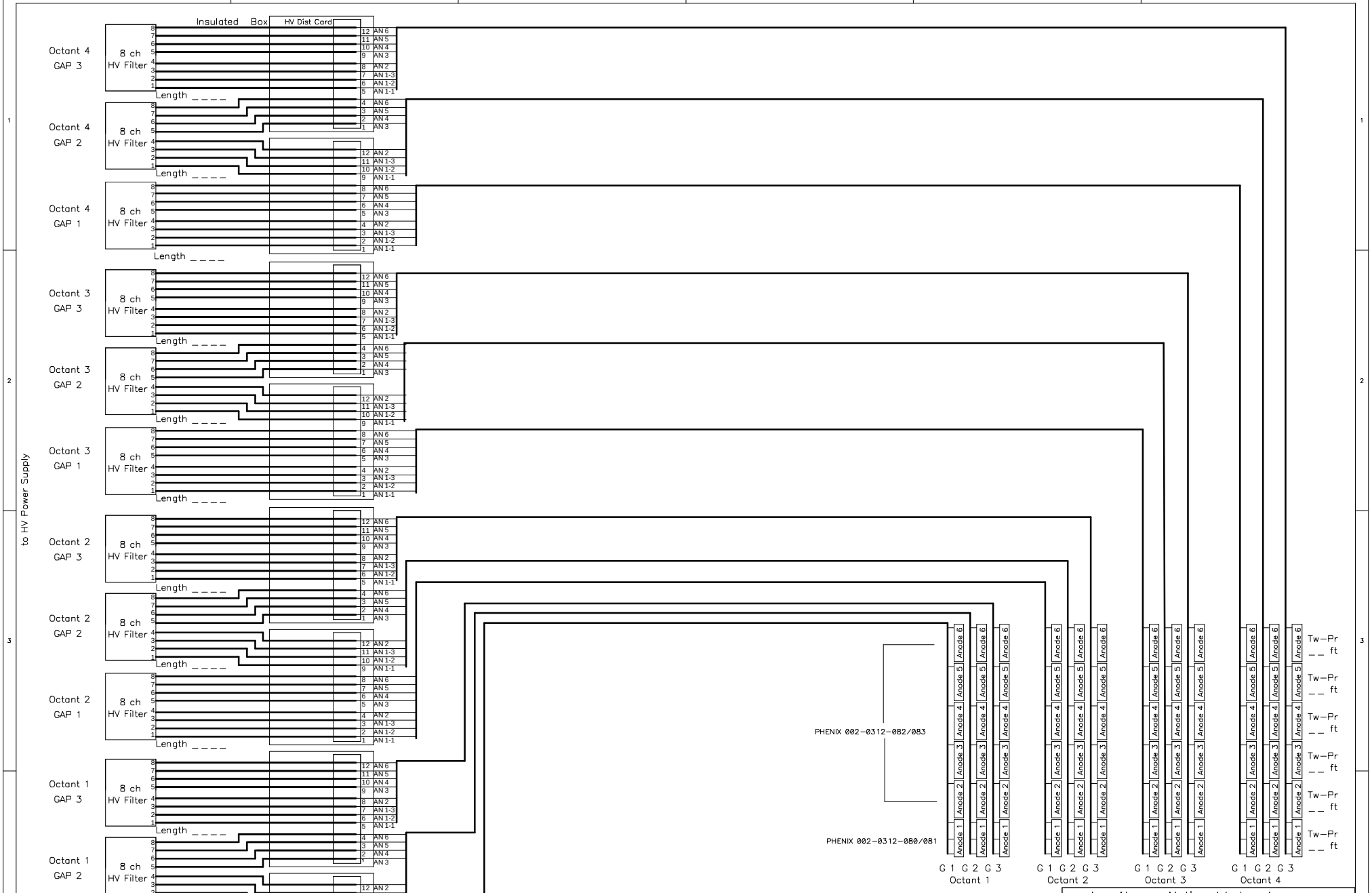

Los Alamos National Laboratory		
Title:	MUON TRACKING HV DIST. SYSTEM	
Station 1South		
Size	Date Originated: 21 Jan 2000	
	Last Revised: 18 Apr 2000	
LANL DWG #: St 1 S HV Dist		Approved By:W. Sondheim
PHENIX #: 105–0312–203		Drawn by: G. Hart P–25
Filename: St 1 S HV Dist.sch		Sheet 1 of 2

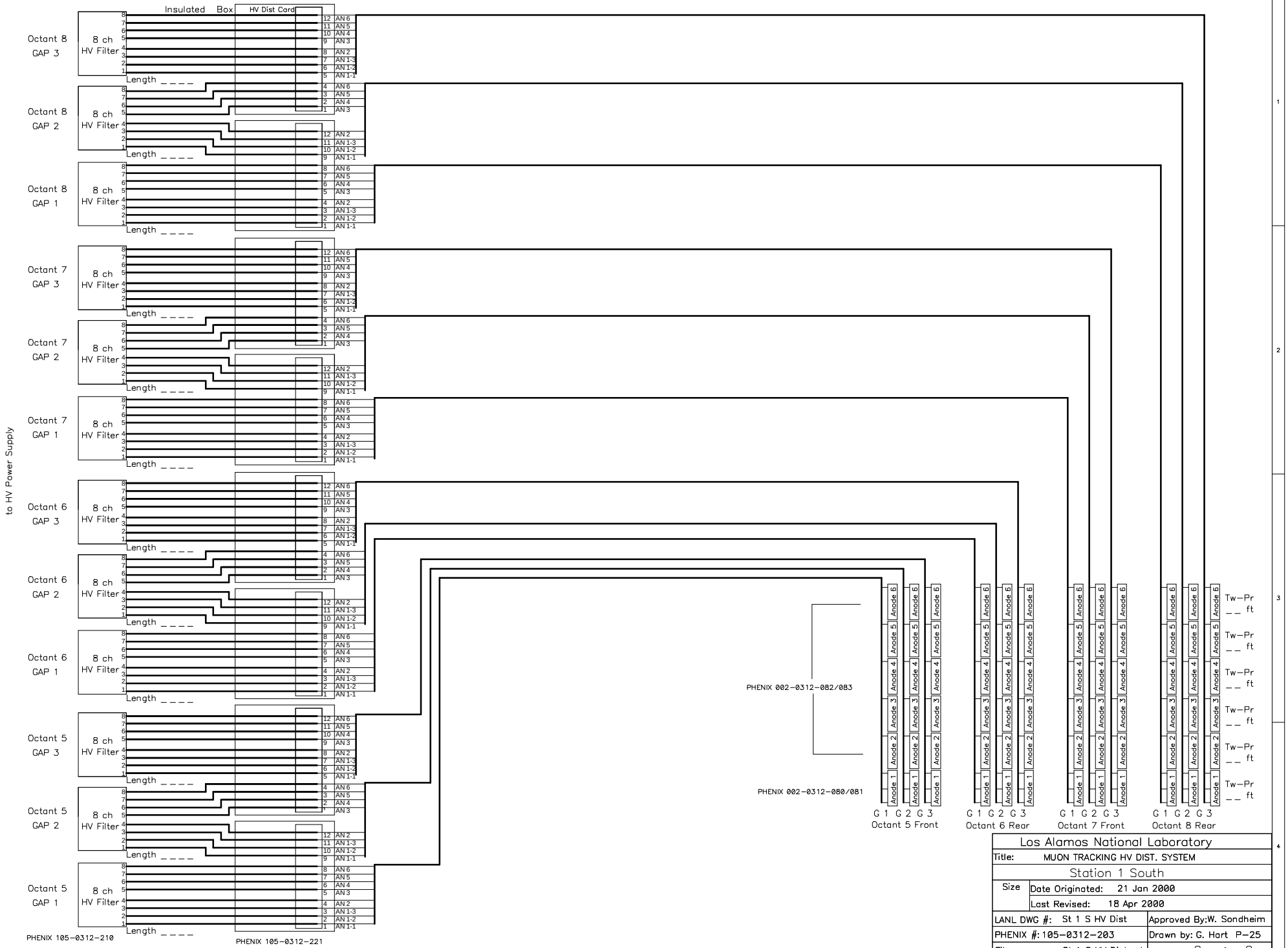

Los Alamos National Laboratory		
Title:	MUON TRACKING HV DIST. SYSTEM	
Station 1 South		
Size	Date Originated: 21 Jan 2000	
	Last Revised: 18 Apr 2000	
LANL DWG #: St 1 S HV Dist		Approved By:W. Sondheim
PHENIX #: 105-0312-203		Drawn by: G. Hart P-25
Filename: St 1 S HV Dist.sch		Sheet 2 of 2

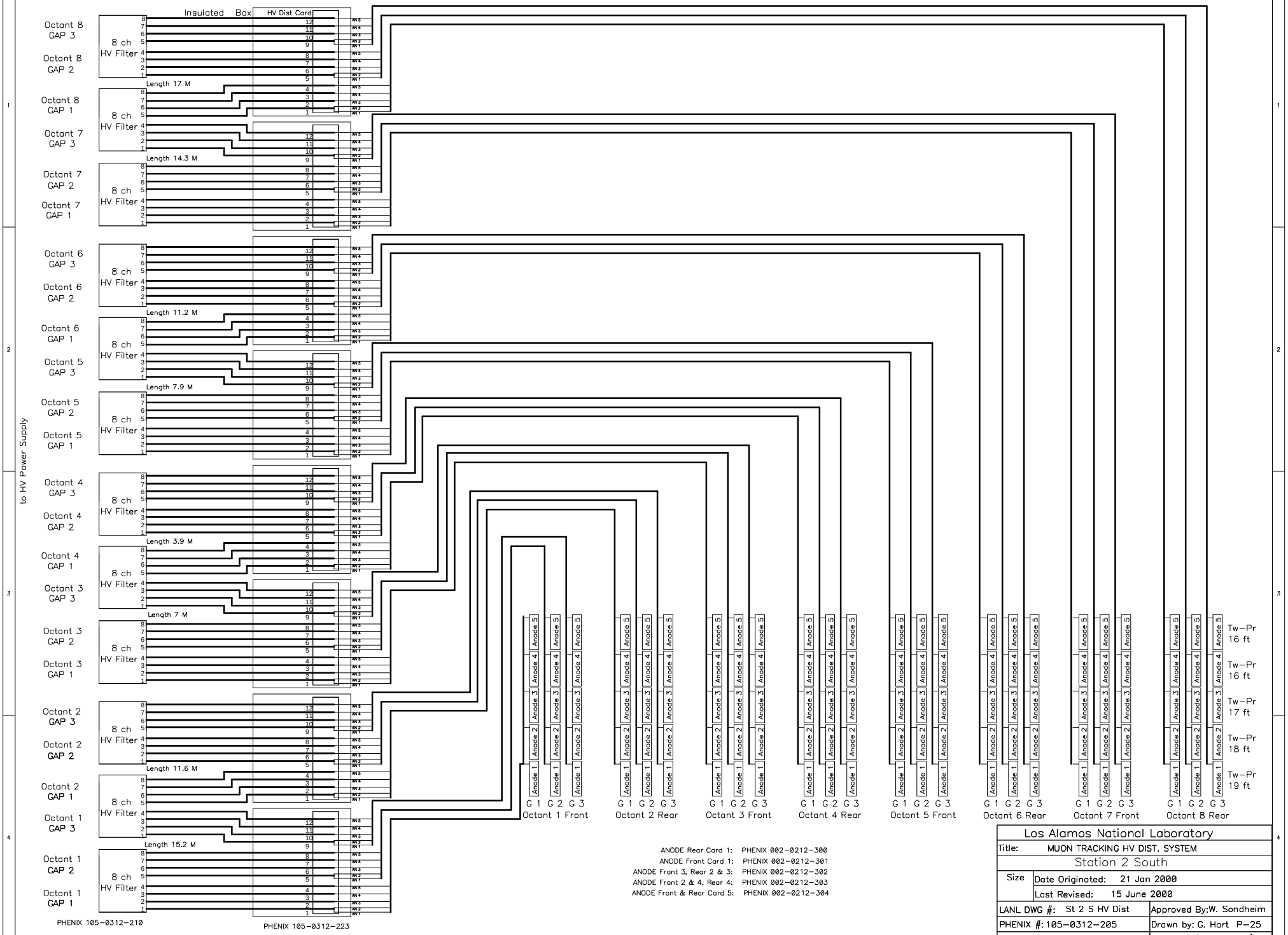

ANODE Rear Card 1: PHENIX 002–0212–300
ANODE Front Card 1: PHENIX 002–0212–301
ANODE Front 3, Rear 2 & 3: PHENIX 002–0212–302
ANODE Front 2 & 4, Rear 4: PHENIX 002–0212–303
ANODE Front & Rear Card 5: PHENIX 002–0212–304

Los Alamos National Laboratory		
Title:	MUON TRACKING HV DIST. SYSTEM	
Station 2 South		
Size	Date Originated: 21 Jan 2000	
	Last Revised: 15 June 2000	
LANL DWG #: St 2 S HV Dist		Approved By: W. Sondheim
PHENIX #: 105–0312–205		Drawn by: G. Hart P–25
Filename: St 2 S HV Dist.sch		Sheet 1 of 1

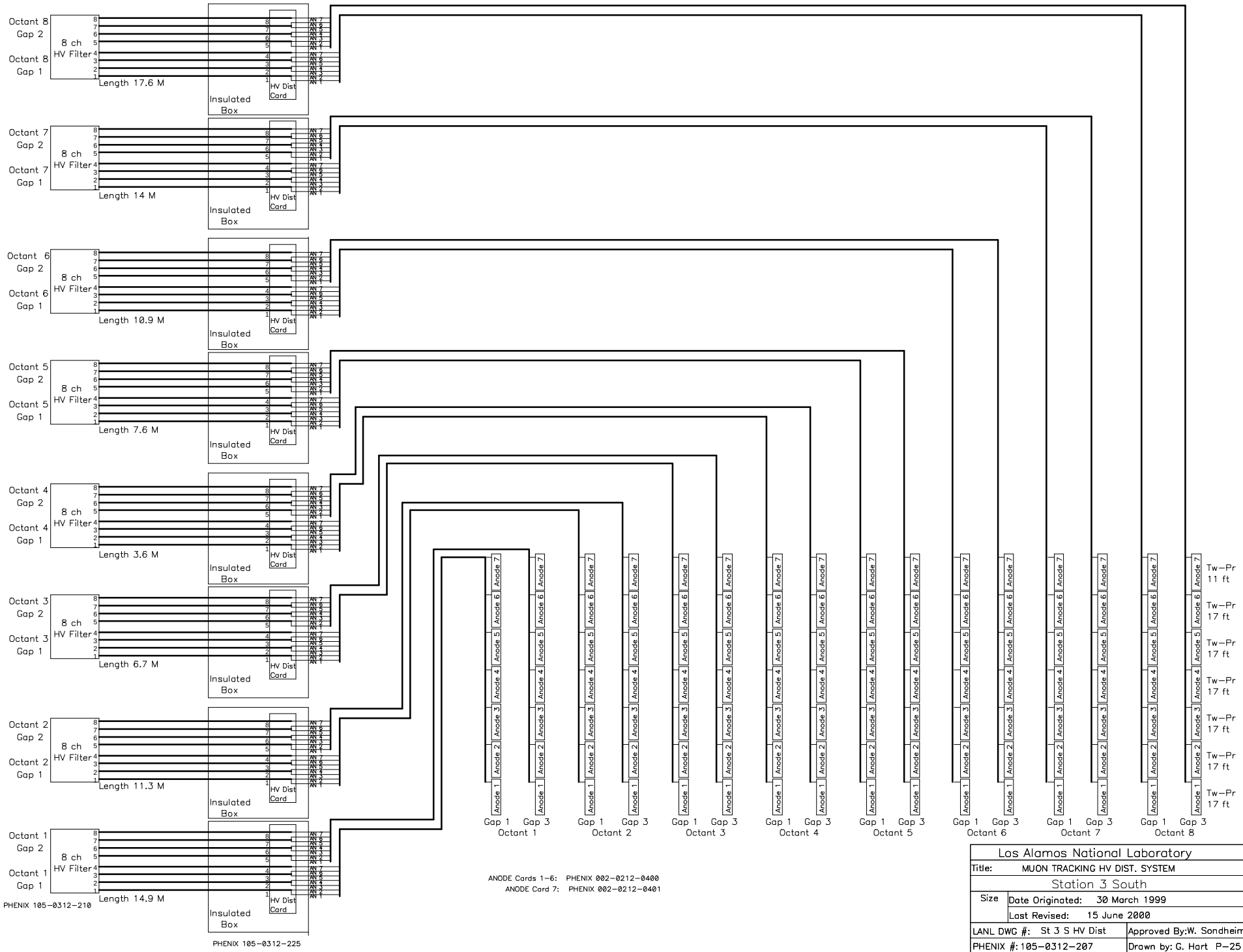

Los Alamos National Laboratory		
Title:	MUON TRACKING HV DIST. SYSTEM	
Station 3 South		
Size	Date Originated: 30 March 1999	
	Last Revised: 15 June 2000	
LANL DWG #: St 3 S HV Dist		Approved By: W. Sondheim
PHENIX #: 105-0312-207		Drawn by: G. Hart P-25
Filename: St 3 S HV Dist.sch		Sheet of

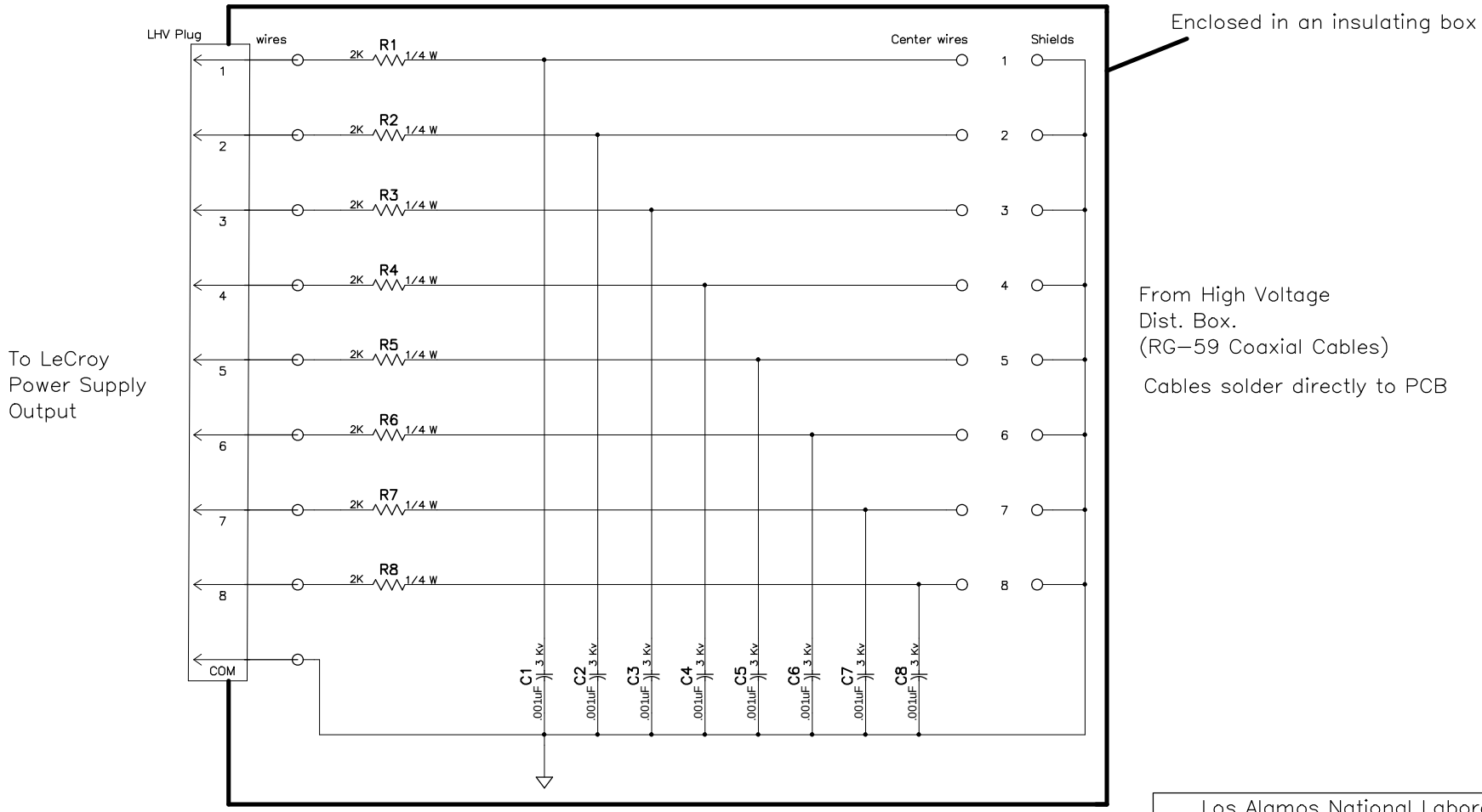

Los Alamos National Laboratory		
Title: LeCroy HV Plug/Filter box, 8 Channel		
SCHEMATIC		
Size	Date Originated: 23 Feb 2000	
	Last Revised: 5 Apr 2000	
LANL DWG #: 63Y299053		Approved By: W. Sondheim
PHENIX #: 105-0312-210		Drawn by: G. Hart
Filename: 299053RC.sch		Sheet of

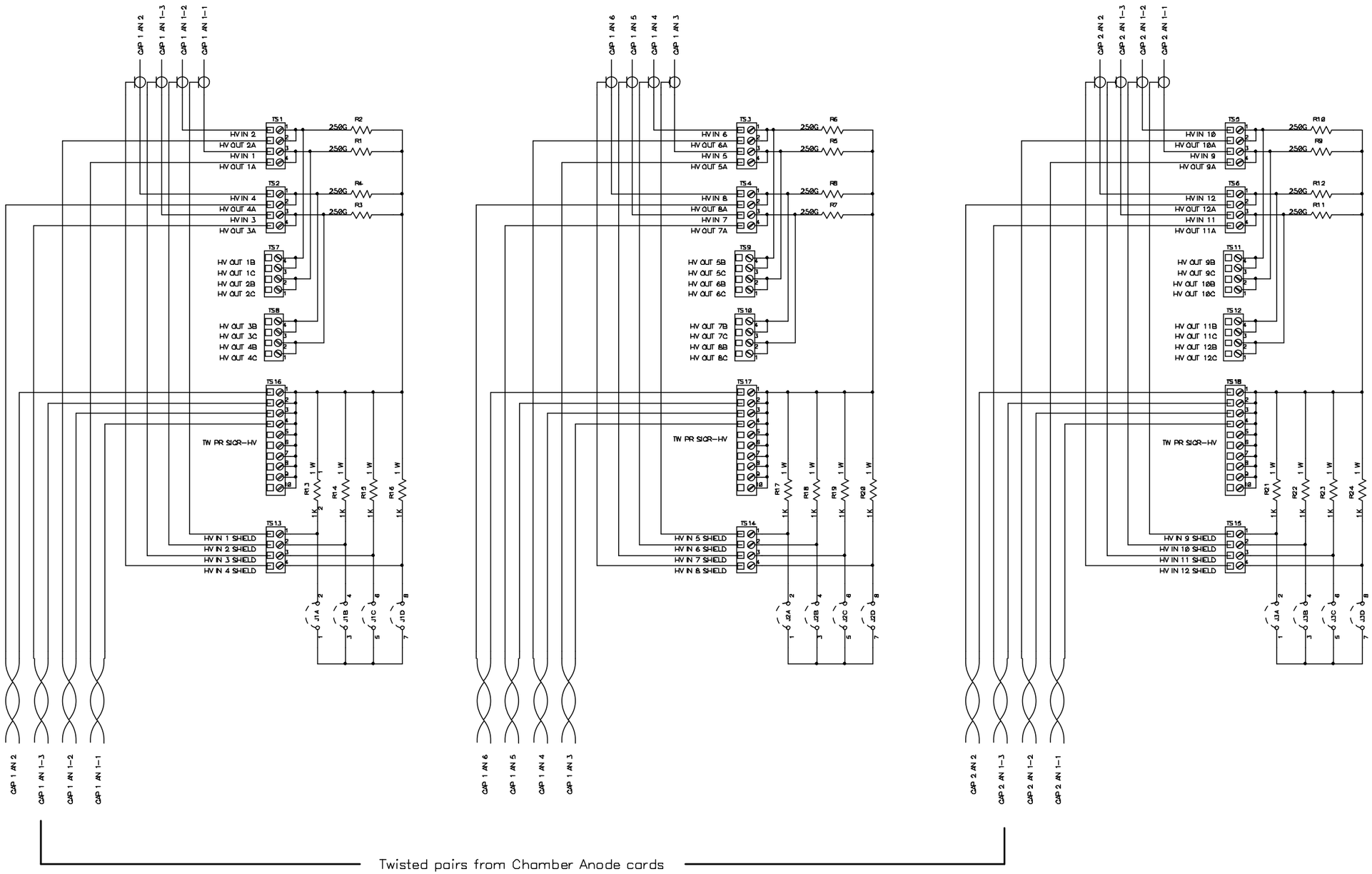

Los Alamos National Laboratory		
Title: MUON TRACKING HV DIST BOX 1 South		
SCHEMATIC OCTANT 1 GAPs 1-2		
Size C	Date Originated: 14 April 1999	
	Last Revised: 16 Nov 2000	
LANL DWG #: 63Y299047A		Approved By:W. Sondheim
PHENIX #: 105-0312-221		Drawn by: G. Hart , P-25
Filename: ST 1 S HV DIST BOX.sch		Sheet 1 of 16

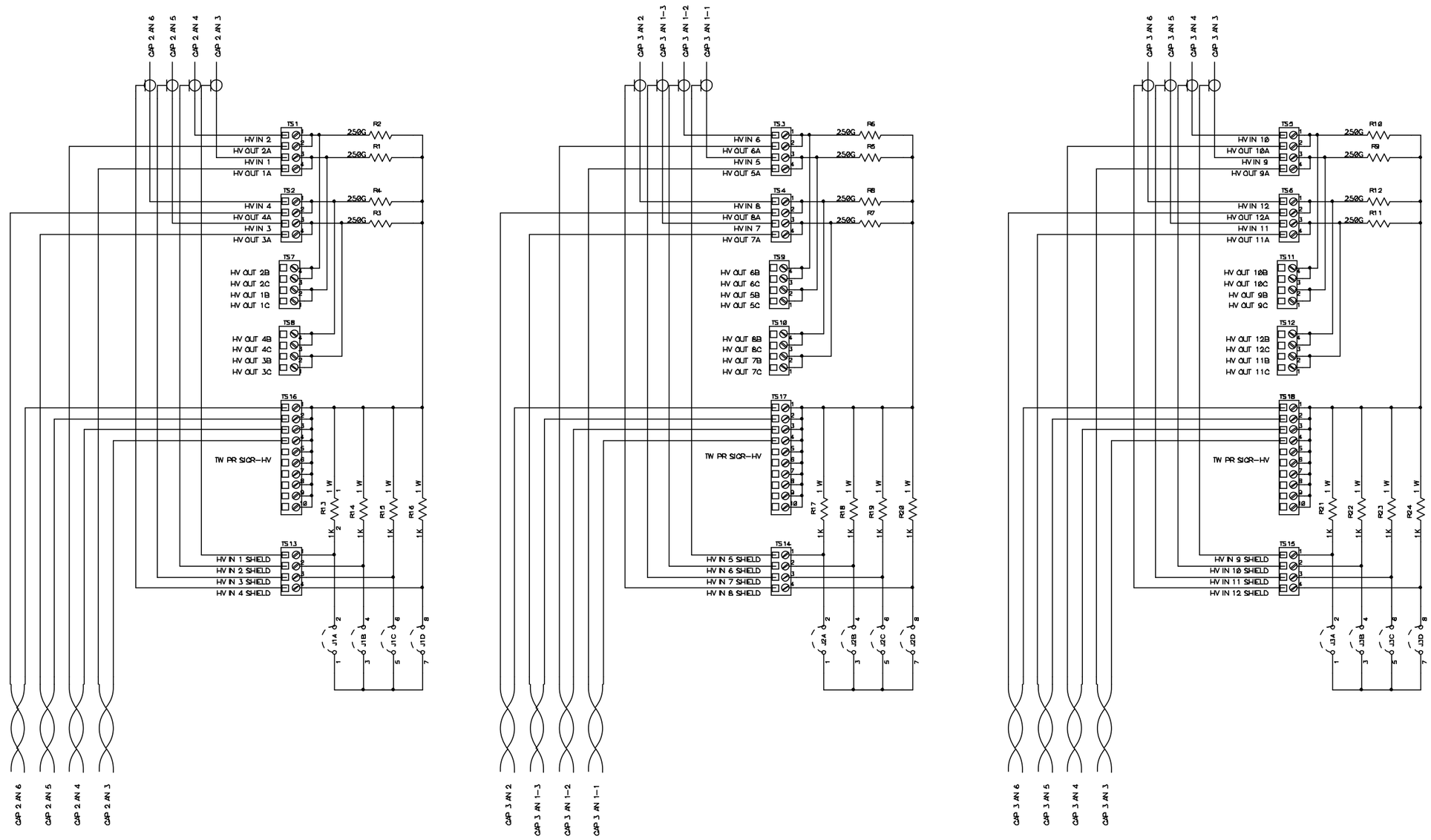

Los Alamos National Laboratory		
Title: MUON TRACKING HV DIST BOX 1 South		
SCHEMATIC OCTANT 1 GAPS 2-3		
Size C	Date Originated: 14 April 1999	
	Last Revised: 16 Nov 2000	
LANL DWG #: 63Y299047A		Approved By:W. Sondheim
PHENIX #: 105-0312-221		Drawn by: G. Hart , P-25
Filename: ST 1 S HV DIST BOX.sch		Sheet 2 of 16

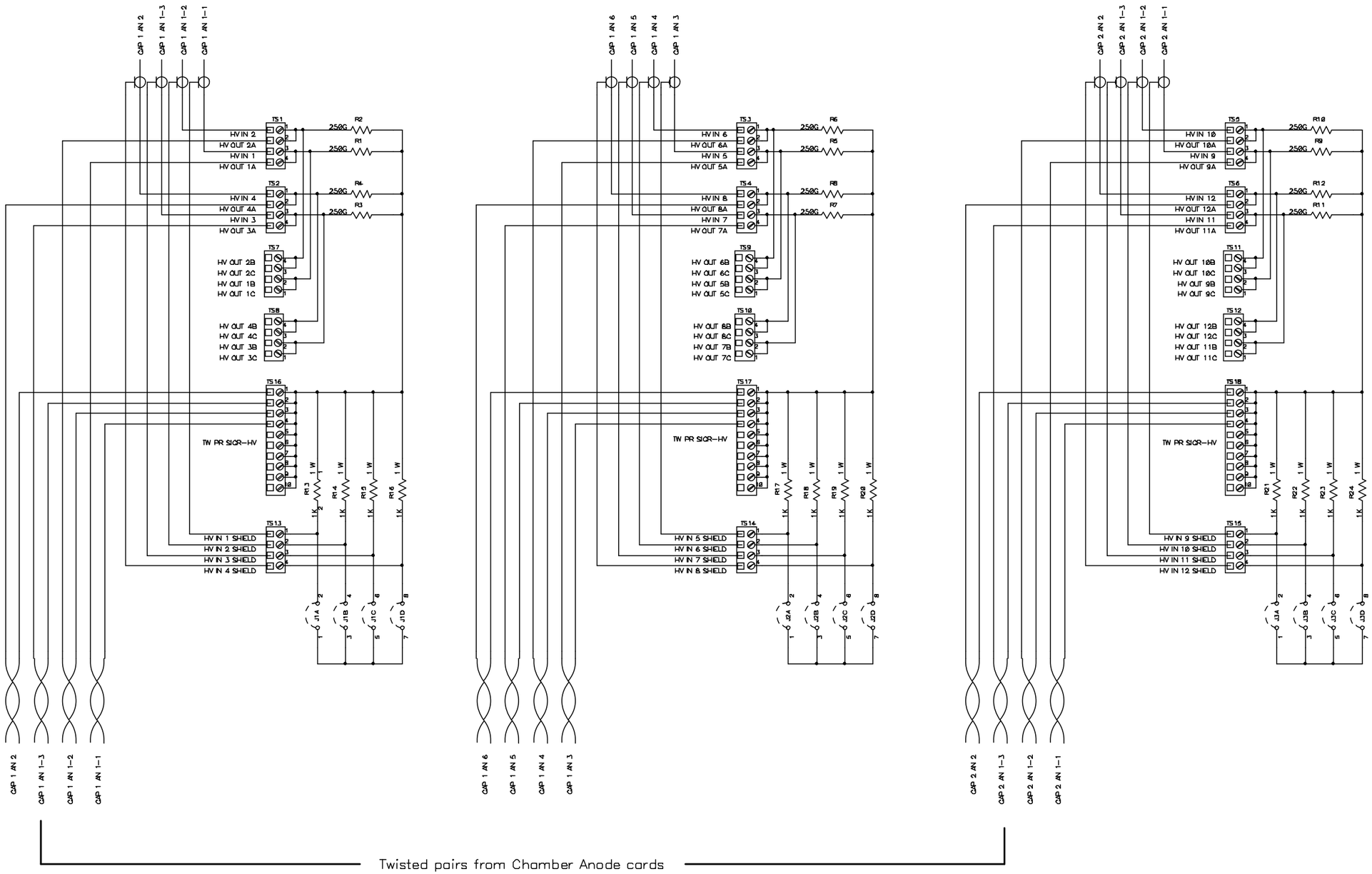

Los Alamos National Laboratory		
Title: MUON TRACKING HV DIST BOX 1 South		
SCHEMATIC OCTANT 2 GAPs 1-2		
Size	Date Originated: 14 April 1999	
	Last Revised: 16 Nov 2000	
LANL DWG #: 63Y299047A		Approved By:W. Sondheim
PHENIX #: 105-0312-221		Drawn by: G. Hart , P-25
Filename: ST 1 S HV DIST BOX.sch		Sheet 3 of 16

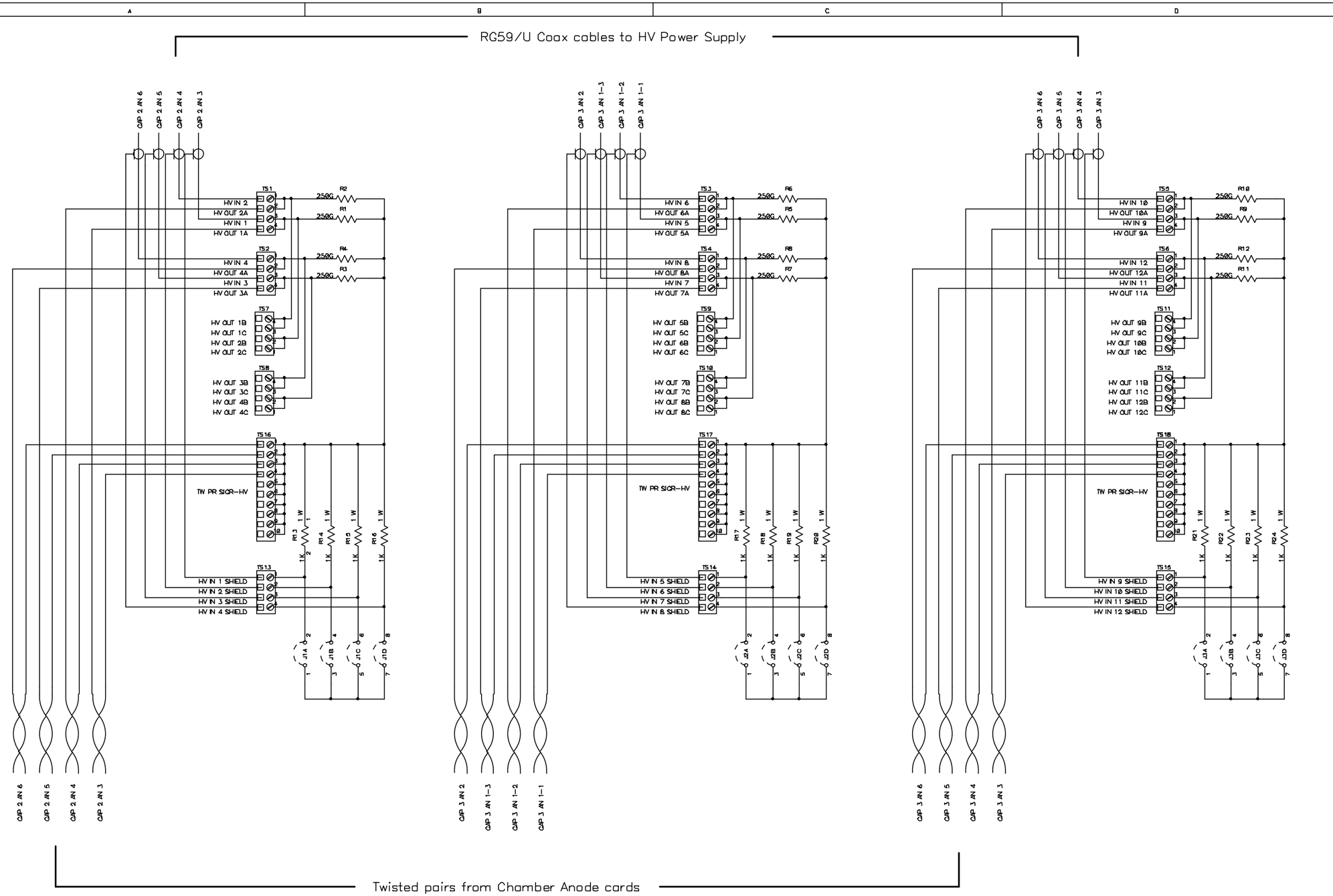

Los Alamos National Laboratory		
Title: MUON TRACKING HV DIST BOX 1 South		
SCHEMATIC OCTANT 2 GAPS 2-3		
Size C	Date Originated: 14 April 1999	
	Last Revised: 16 Nov 2000	
LANL DWG #: 63Y299047A		Approved By: W. Sondheim
PHENIX #: 105-0312-221		Drawn by: G. Hart , P-25
Filename: ST 1 S HV DIST BOX.sch		Sheet 4 of 16

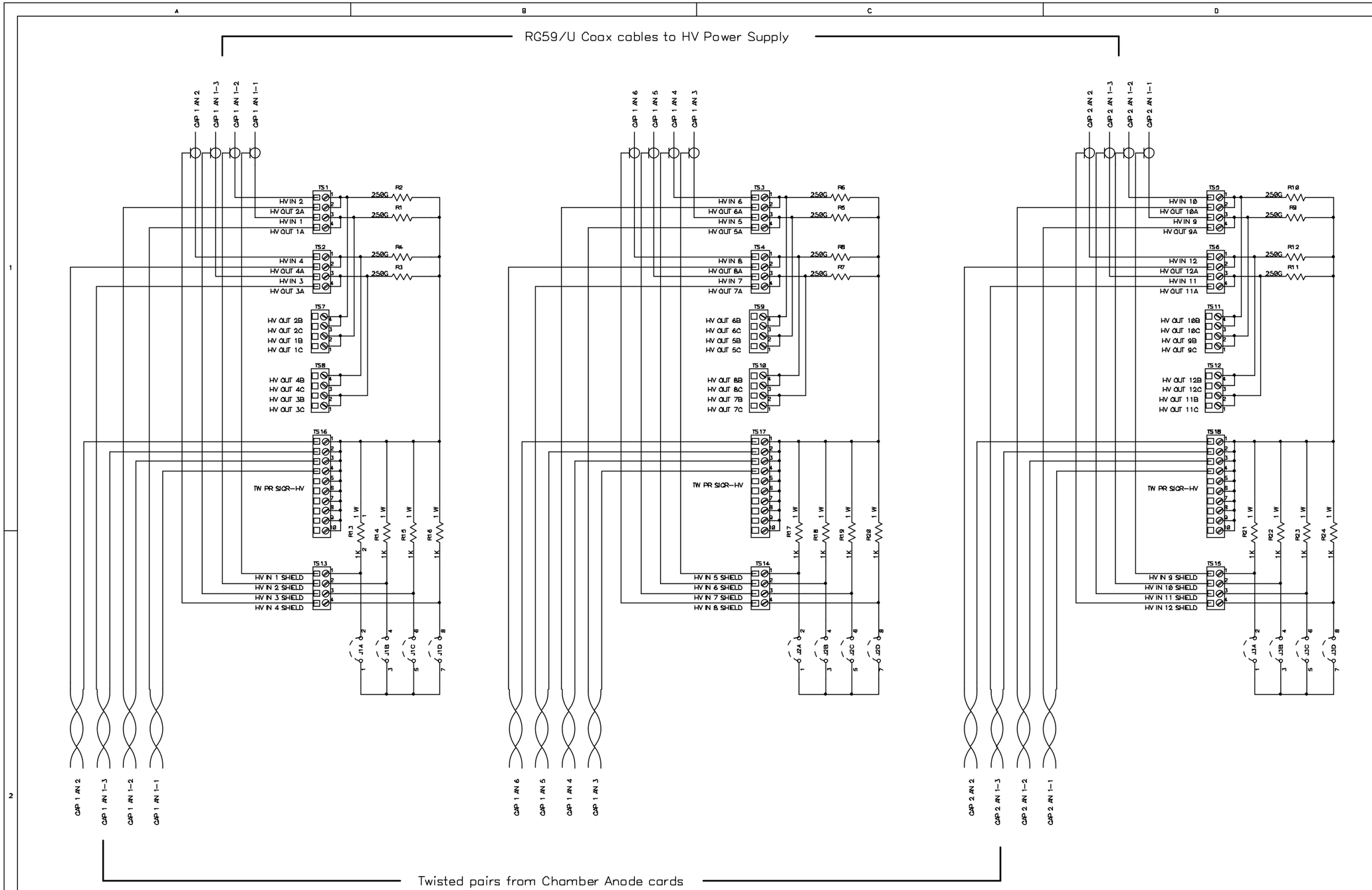

Los Alamos National Laboratory		
Title: MUON TRACKING HV DIST BOX 1 South		
SCHEMATIC OCTANT 3 GAPs 1-2		
Size	Date Originated: 14 April 1999	
	Last Revised: 16 Nov 2000	
LANL DWG #: 63Y299047A		Approved By:W. Sondheim
PHENIX #: 105-0312-221		Drawn by: G. Hart , P-25
Filename: ST 1 S HV DIST BOX.sch		Sheet 5 of 16

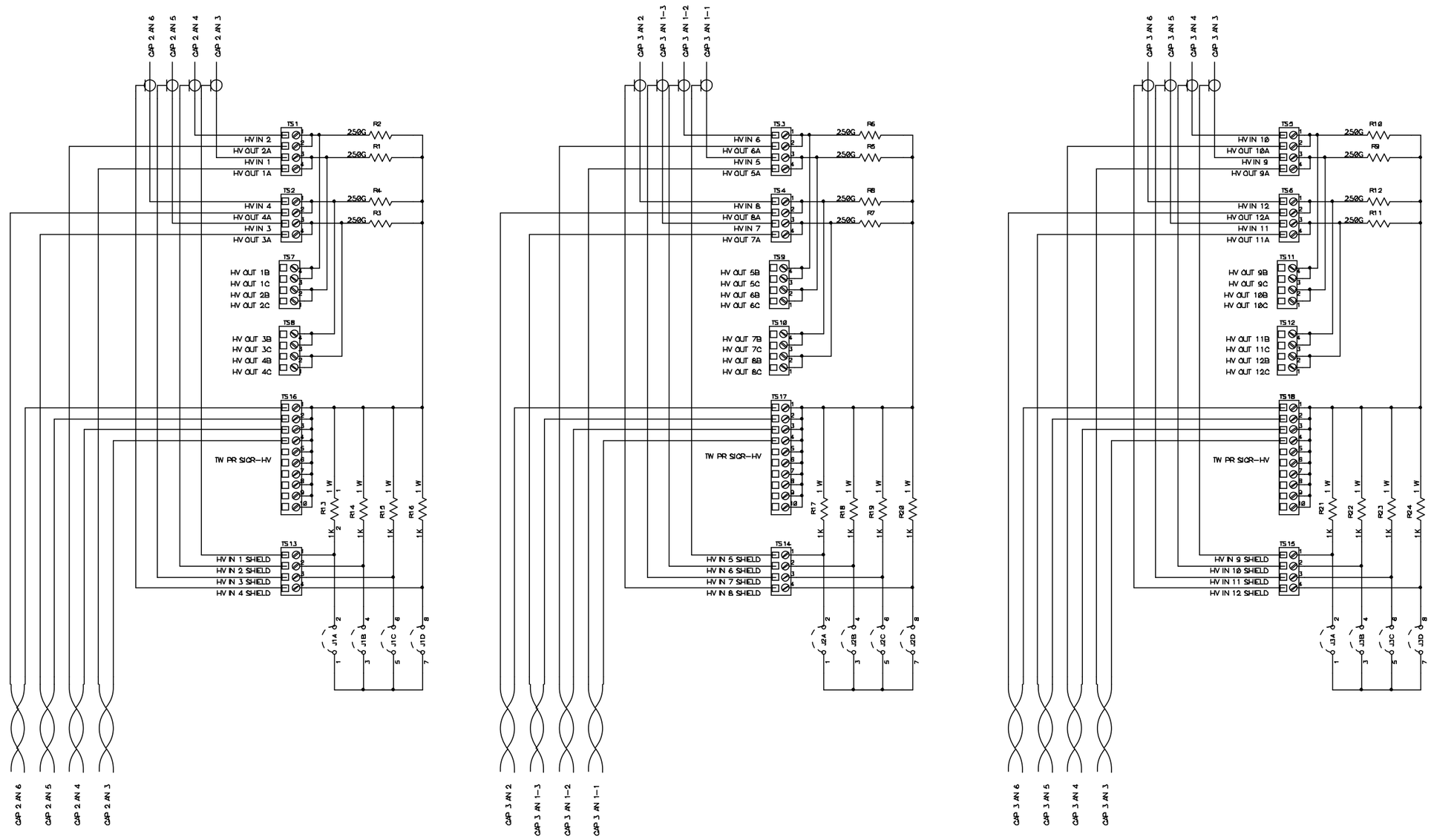

Los Alamos National Laboratory		
Title: MUON TRACKING HV DIST BOX 1 South		
SCHEMATIC OCTANT 3 GAPS 2-3		
Size C	Date Originated: 14 April 1999	
	Last Revised: 16 Nov 2000	
LANL DWG #: 63Y299047A		Approved By:W. Sondheim
PHENIX #: 105-0312-221		Drawn by: G. Hart , P-25
Filename: ST 1 S HV DIST BOX.sch		Sheet 6 of 16

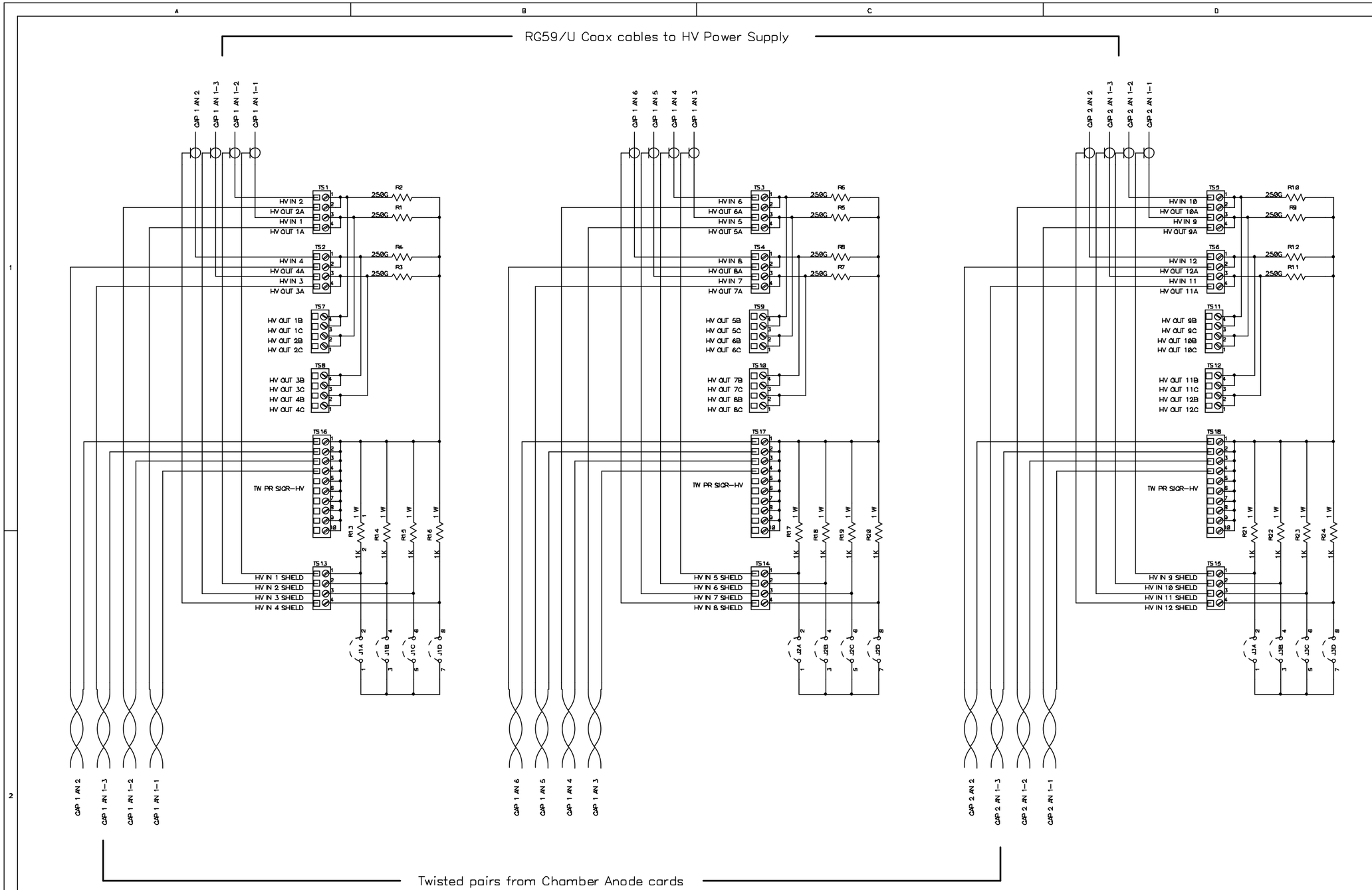

Los Alamos National Laboratory	
Title: MUON TRACKING HV DIST BOX 1 South	
SCHEMATIC OCTANT 4 GAPs 1-2	
Size	Date Originated: 14 April 1999
	Last Revised: 16 Nov 2000
LANL DWG #: 63Y299047A	Approved By:W. Sondheim
PHENIX #: 105-0312-221	Drawn by: G. Hart , P-25
Filename: ST 1 S HV DIST BOX.sch	Sheet 7 of 16

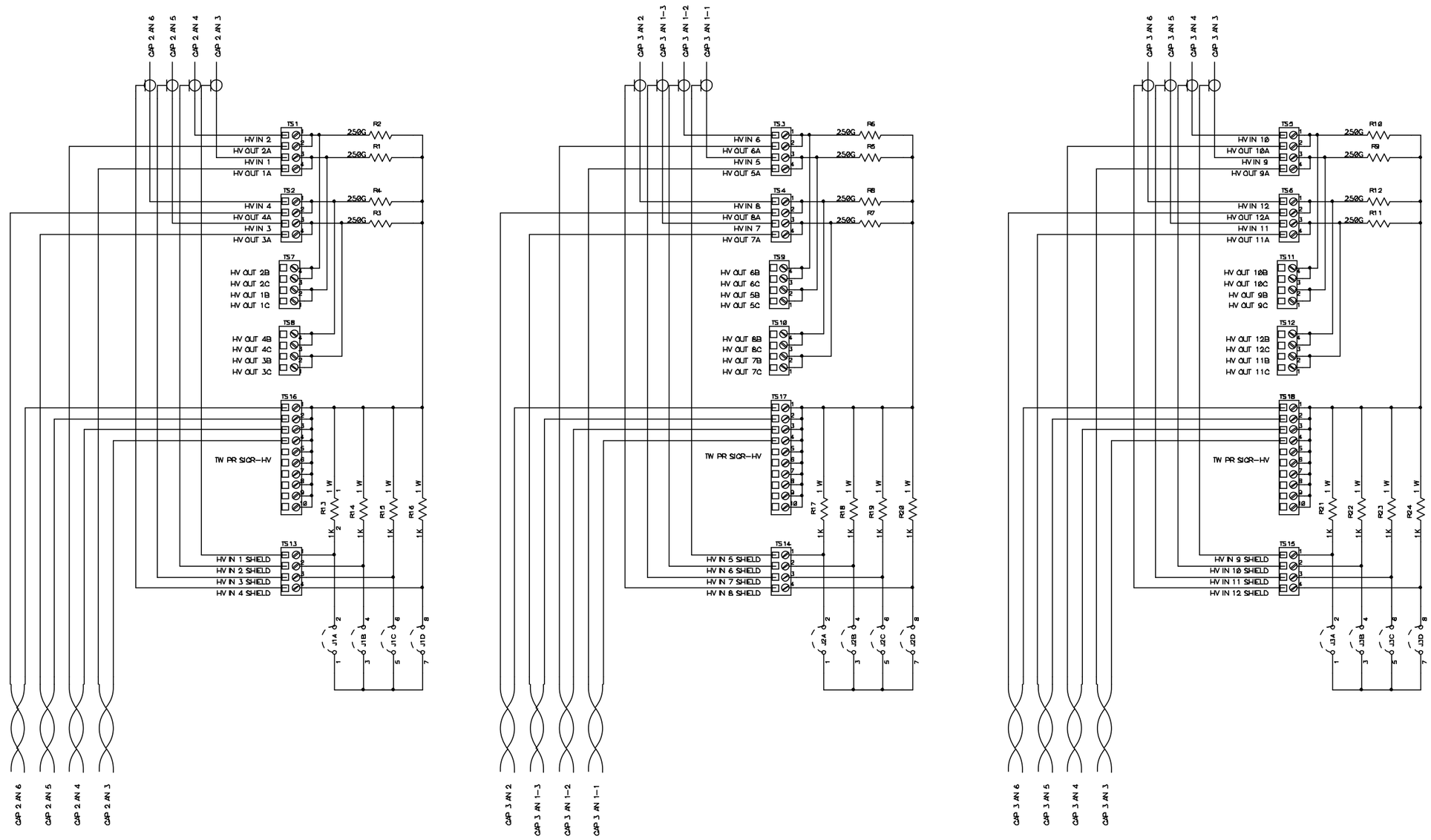

Los Alamos National Laboratory		
Title: MUON TRACKING HV DIST BOX 1 South		
SCHEMATIC OCTANT 4 GAPS 2-3		
Size C	Date Originated: 14 April 1999	
	Last Revised: 16 Nov 2000	
LANL DWG #: 63Y299047A		Approved By:W. Sondheim
PHENIX #: 105-0312-221		Drawn by: G. Hart , P-25
Filename: ST 1 S HV DIST BOX.sch		Sheet 8 of 16

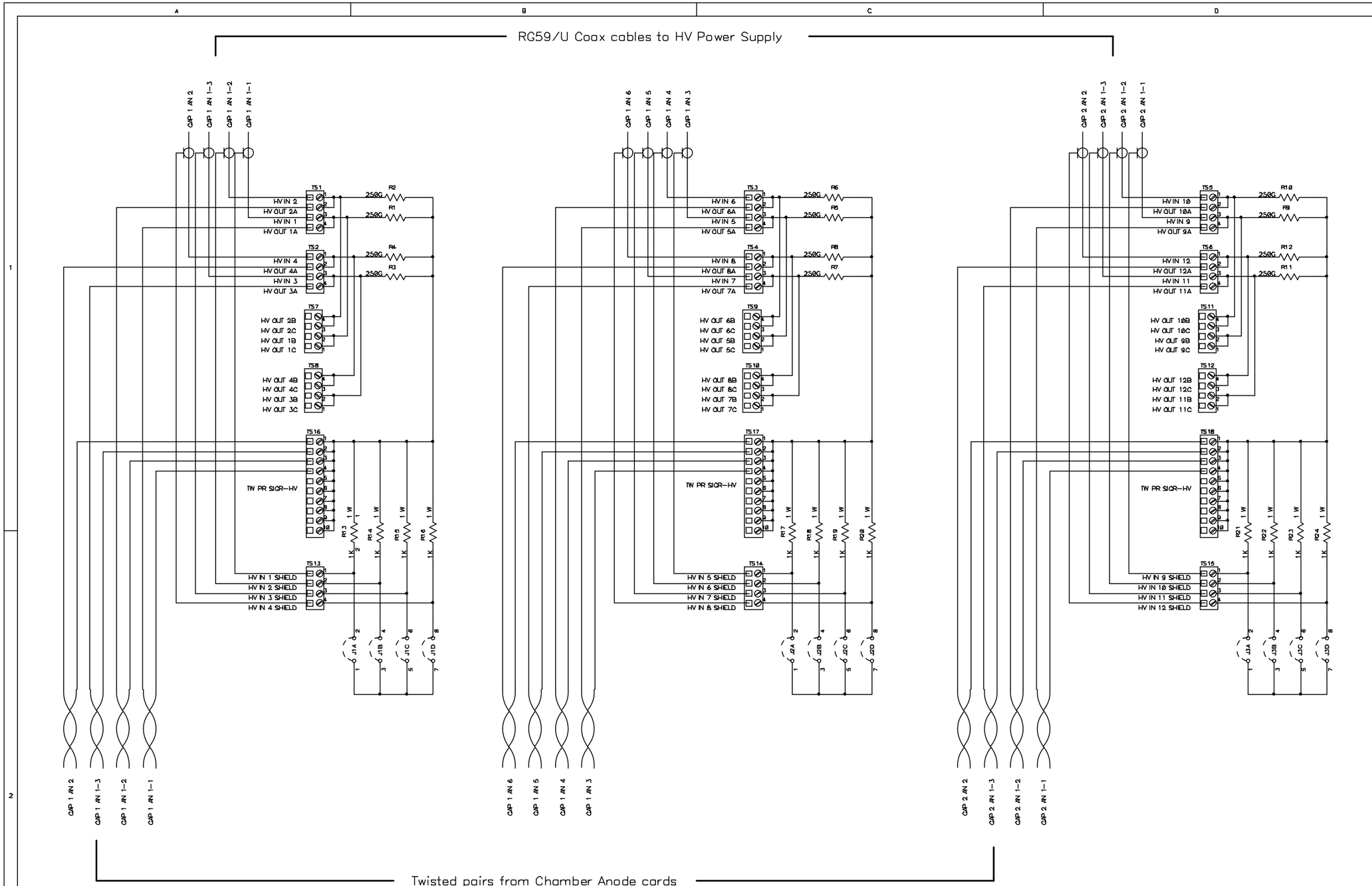

Los Alamos National Laboratory		
Title: MUON TRACKING HV DIST BOX 1 South		
SCHEMATIC OCTANT 5 GAPs 1-2		
Size	Date Originated: 14 April 1999	
	Last Revised: 16 Nov 2000	
LANL DWG #: 63Y299047A		Approved By:W. Sondheim
PHENIX #: 105-0312-221		Drawn by: G. Hart , P-25
Filename: ST 1 S HV DIST BOX.sch		Sheet 9 of 16

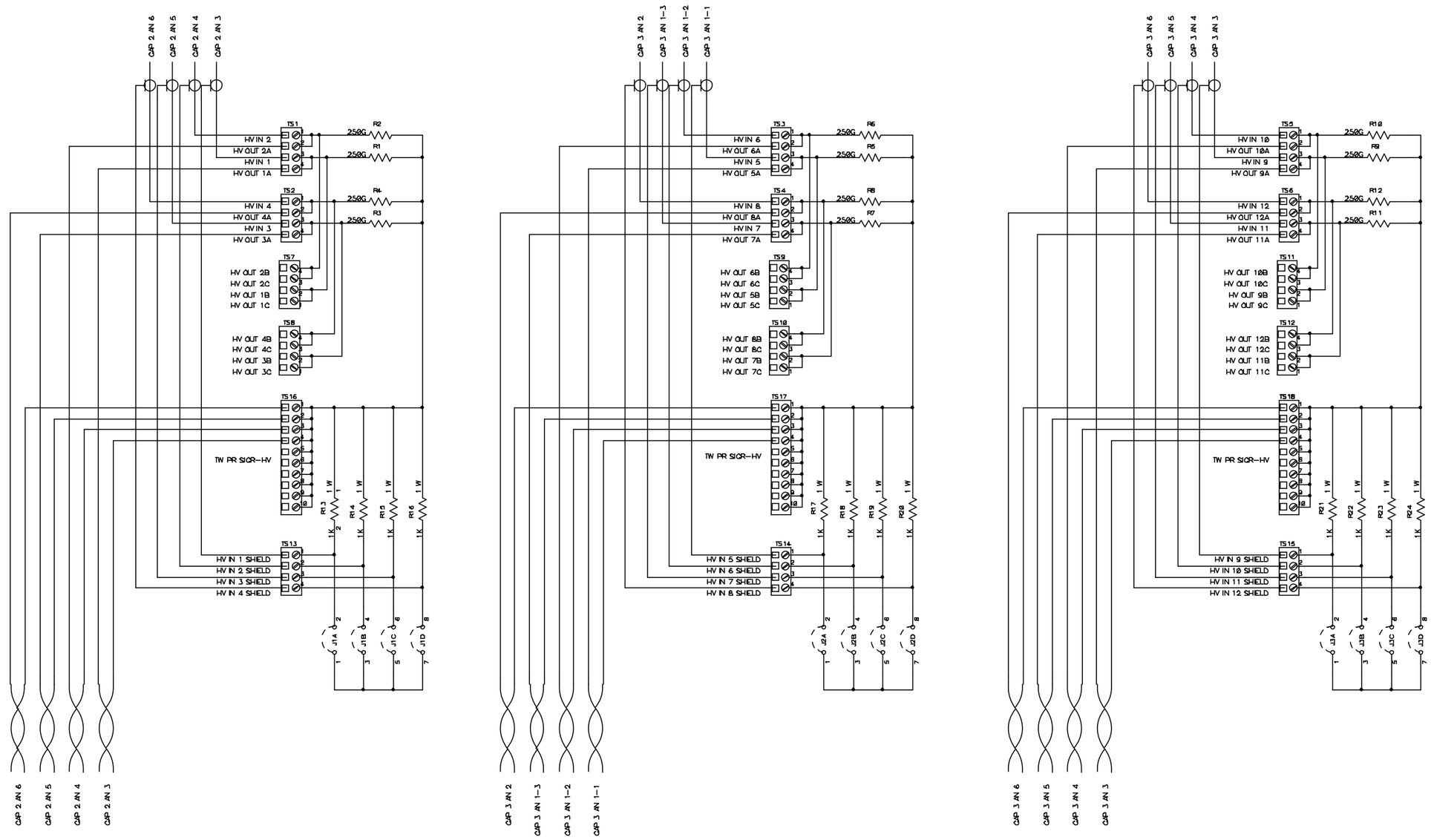

Los Alamos National Laboratory		
Title: MUON TRACKING HV DIST BOX 1 South		
SCHEMATIC OCTANT 5 GAPS 2-3		
Size C	Date Originated: 14 April 1999	
	Last Revised: 16 Nov 2000	
LANL DWG #: 63Y299047A		Approved By:W. Sondheim
PHENIX #: 105-0312-221		Drawn by: G. Hart , P-25
Filename: ST 1 S HV DIST BOX.sch		Sheet 10 of 16

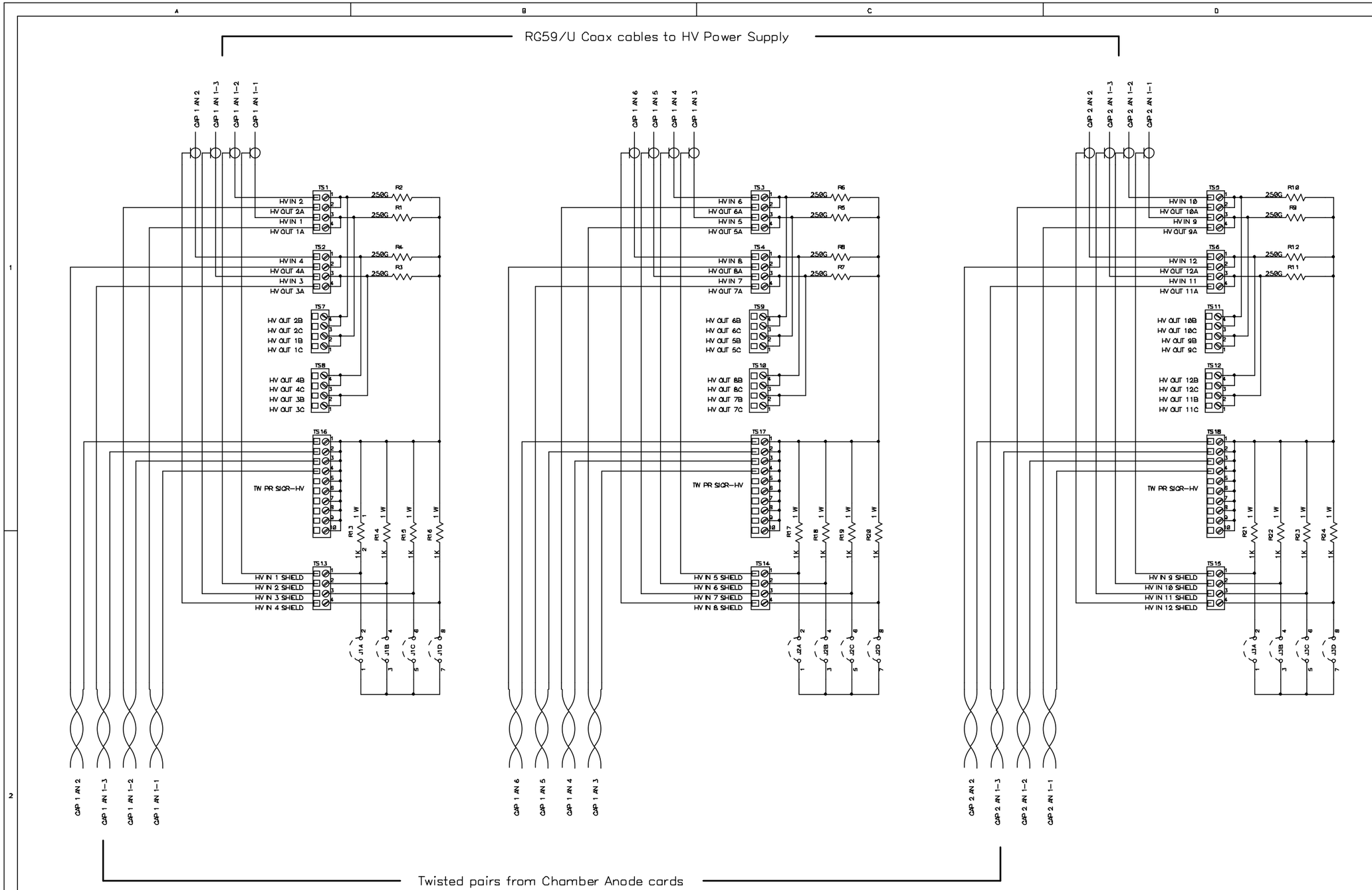

Los Alamos National Laboratory		
Title: MUON TRACKING HV DIST BOX 1 South		
SCHEMATIC OCTANT 6 GAPs 1-2		
Size C	Date Originated: 14 April 1999	
	Last Revised: 16 Nov 2000	
LANL DWG #: 63Y299047A		Approved By:W. Sondheim
PHENIX #: 105-0312-221		Drawn by: G. Hart , P-25
Filename: ST 1 S HV DIST BOX.sch		Sheet 11 of 16

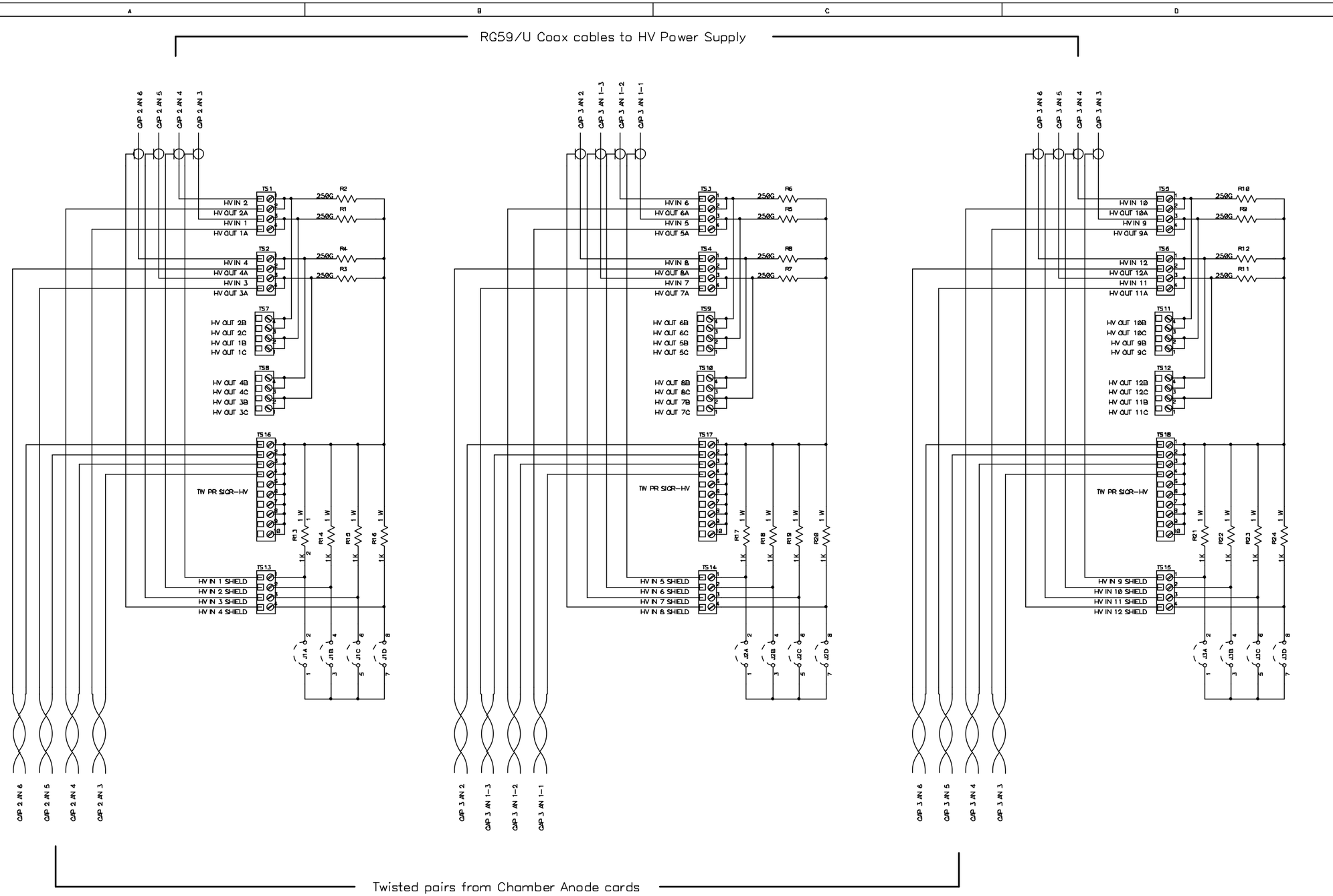

Los Alamos National Laboratory		
Title: MUON TRACKING HV DIST BOX 1 South		
SCHEMATIC OCTANT 6 GAPS 2-3		
Size C	Date Originated: 14 April 1999	
	Last Revised: 16 Nov 2000	
LANL DWG #: 63Y299047A		Approved By:W. Sondheim
PHENIX #: 105-0312-221		Drawn by: G. Hart , P-25
Filename: ST 1 S HV DIST BOX.sch		Sheet 12 of 16

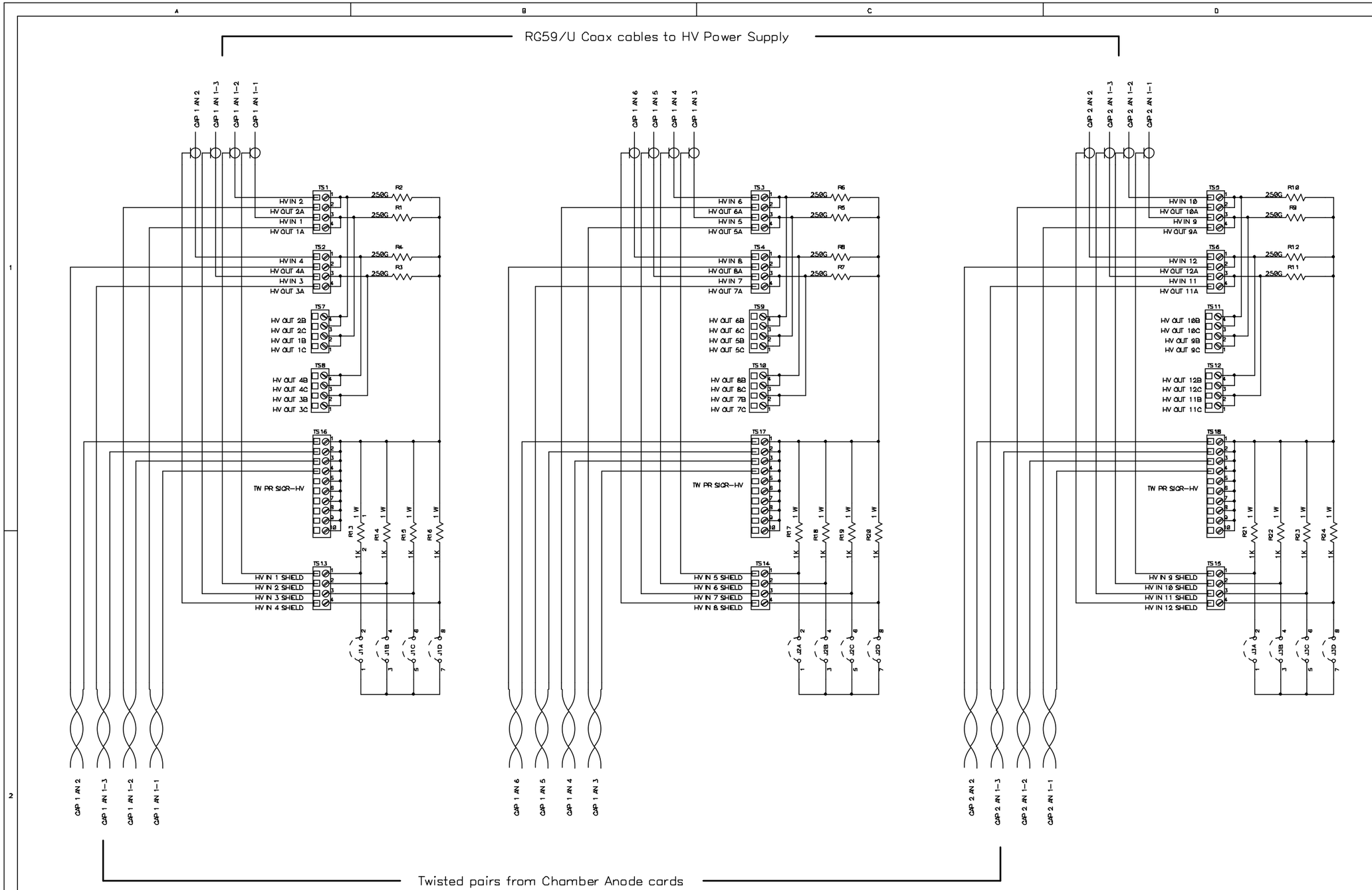

Los Alamos National Laboratory		
Title: MUON TRACKING HV DIST BOX 1 South		
SCHEMATIC OCTANT 7 GAPs 1-2		
Size	Date Originated: 14 April 1999	
	Last Revised: 16 Nov 2000	
LANL DWG #: 63Y299047A		Approved By:W. Sondheim
PHENIX #: 105-0312-221		Drawn by: G. Hart , P-25
Filename: ST 1 S HV DIST BOX.sch		Sheet 13 of 16

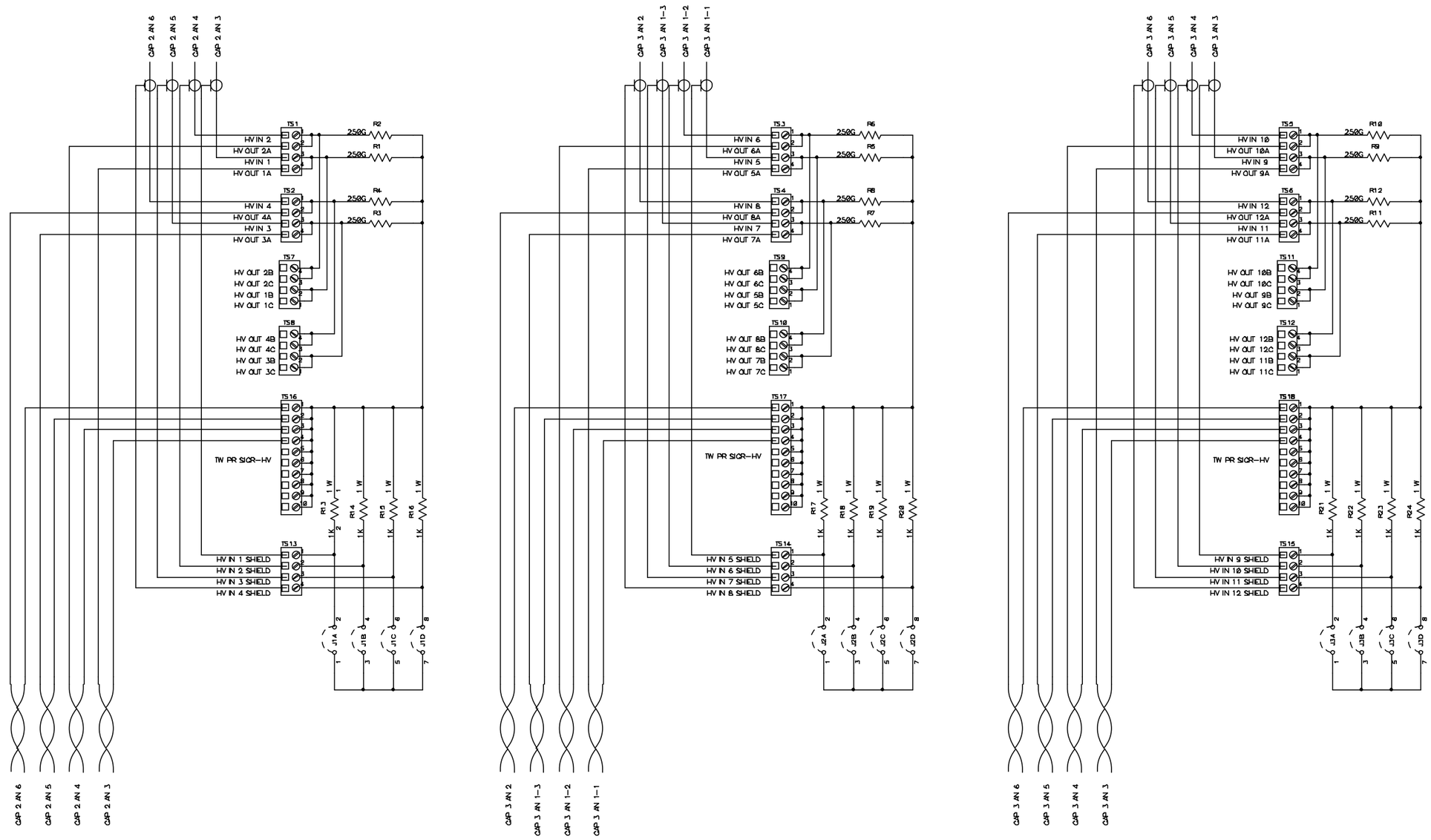

Los Alamos National Laboratory		
Title: MUON TRACKING HV DIST BOX 1 South		
SCHEMATIC OCTANT 7 GAPS 2-3		
Size C	Date Originated: 14 April 1999	
	Last Revised: 16 Nov 2000	
LANL DWG #: 63Y299047A		Approved By:W. Sondheim
PHENIX #: 105-0312-221		Drawn by: G. Hart , P-25
Filename: ST 1 S HV DIST BOX.sch		Sheet 14 of 16

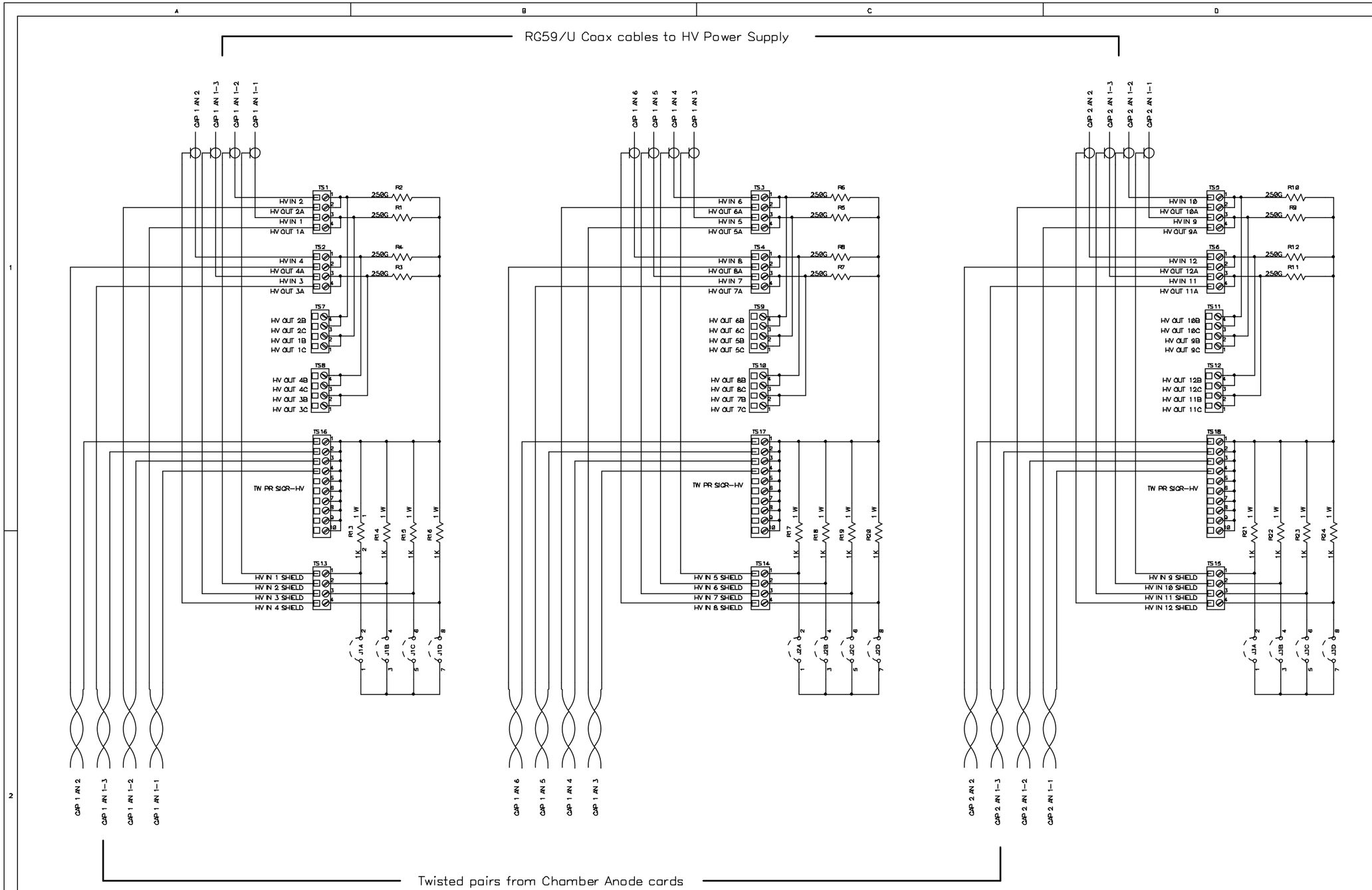

Los Alamos National Laboratory		
Title: MUON TRACKING HV DIST BOX 1 South		
SCHEMATIC OCTANT 8 GAPs 1-2		
Size	Date Originated: 14 April 1999	
	Last Revised: 16 Nov 2000	
LANL DWG #: 63Y299047A		Approved By:W. Sondheim
PHENIX #: 105-0312-221		Drawn by: G. Hart , P-25
Filename: ST 1 S HV DIST BOX.sch		Sheet 15 of 16

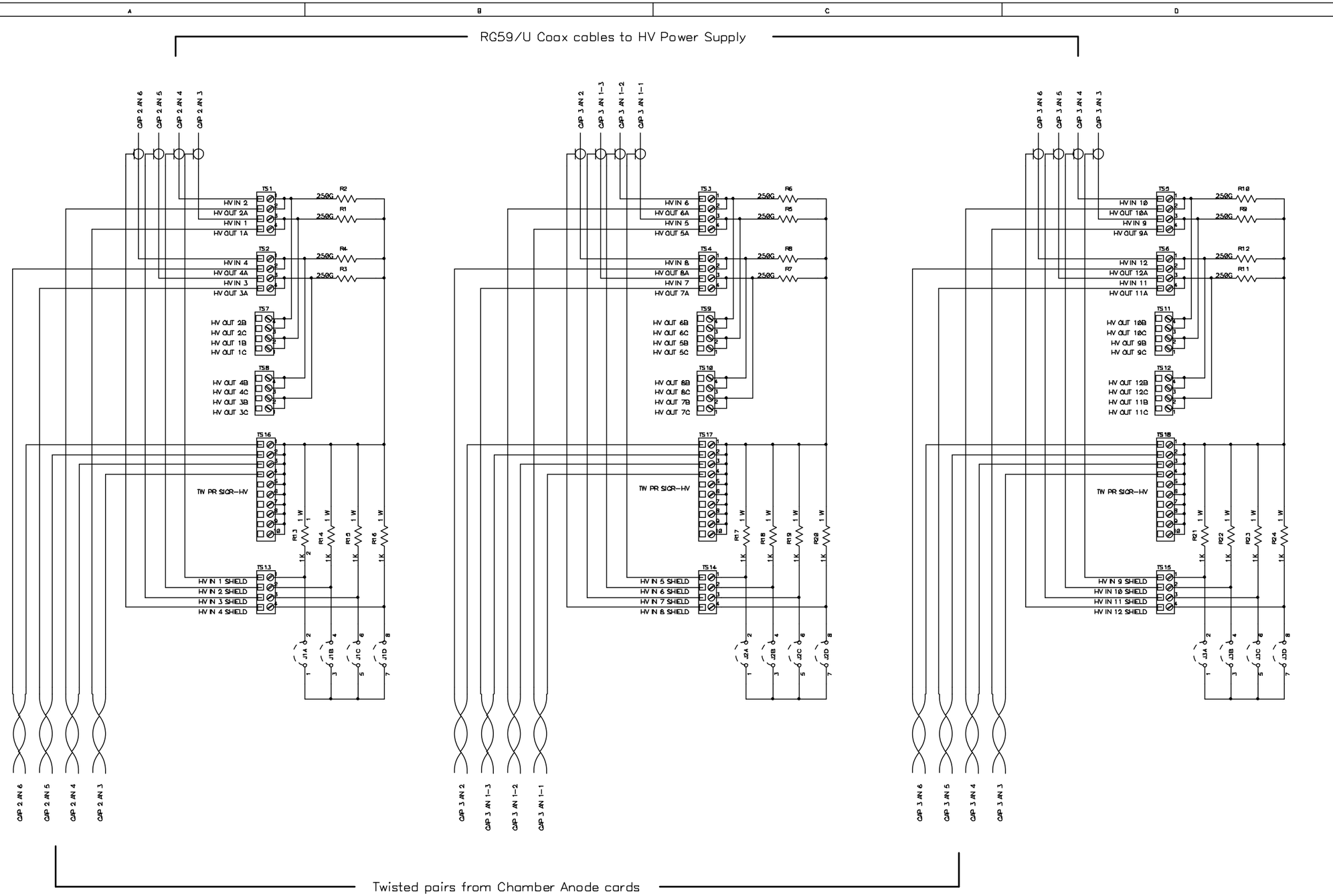

Los Alamos National Laboratory		
Title: MUON TRACKING HV DIST BOX 1 South		
SCHEMATIC OCTANT 8 GAPS 2-3		
Size C	Date Originated: 14 April 1999	
	Last Revised: 16 Nov 2000	
LANL DWG #: 63Y299047A		Approved By:W. Sondheim
PHENIX #: 105-0312-221		Drawn by: G. Hart , P-25
Filename: ST 1 S HV DIST BOX.sch		Sheet 16 of 16

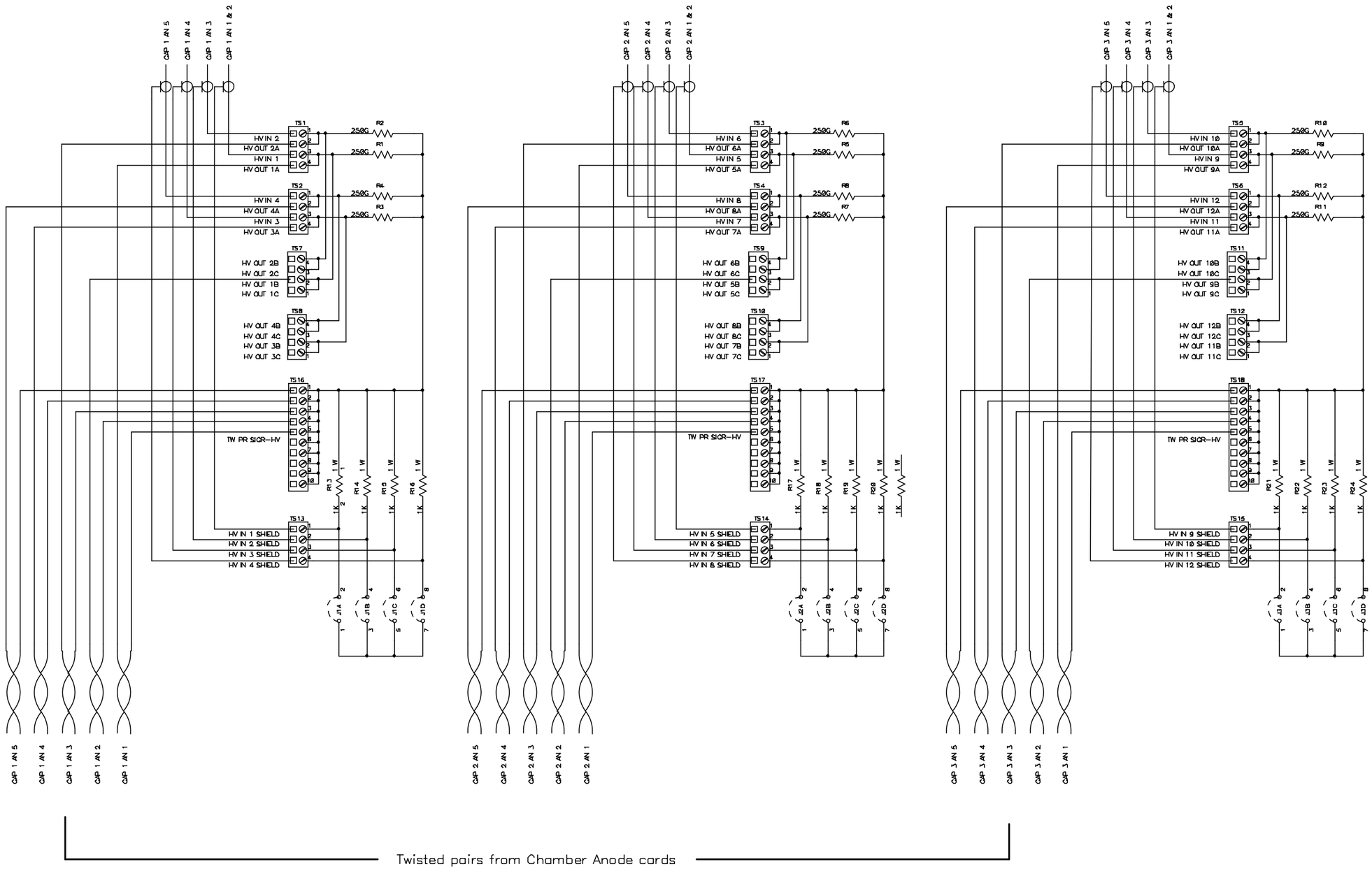

Los Alamos National Laboratory		
Title: MUON TRACKING HV DIST BOX 2 South		
SCHEMATIC OCTANT 1		
Size C	Date Originated: 14 April 1999	
	Last Revised: 16 Nov 2000	
LANL DWG #: 63Y299047A		Approved By:W. Sondheim
PHENIX #: 105-0312-223		Drawn by: G. Hart , P-25
Filename: ST 2 S HV DIST BOX.sch		Sheet 1 of 8

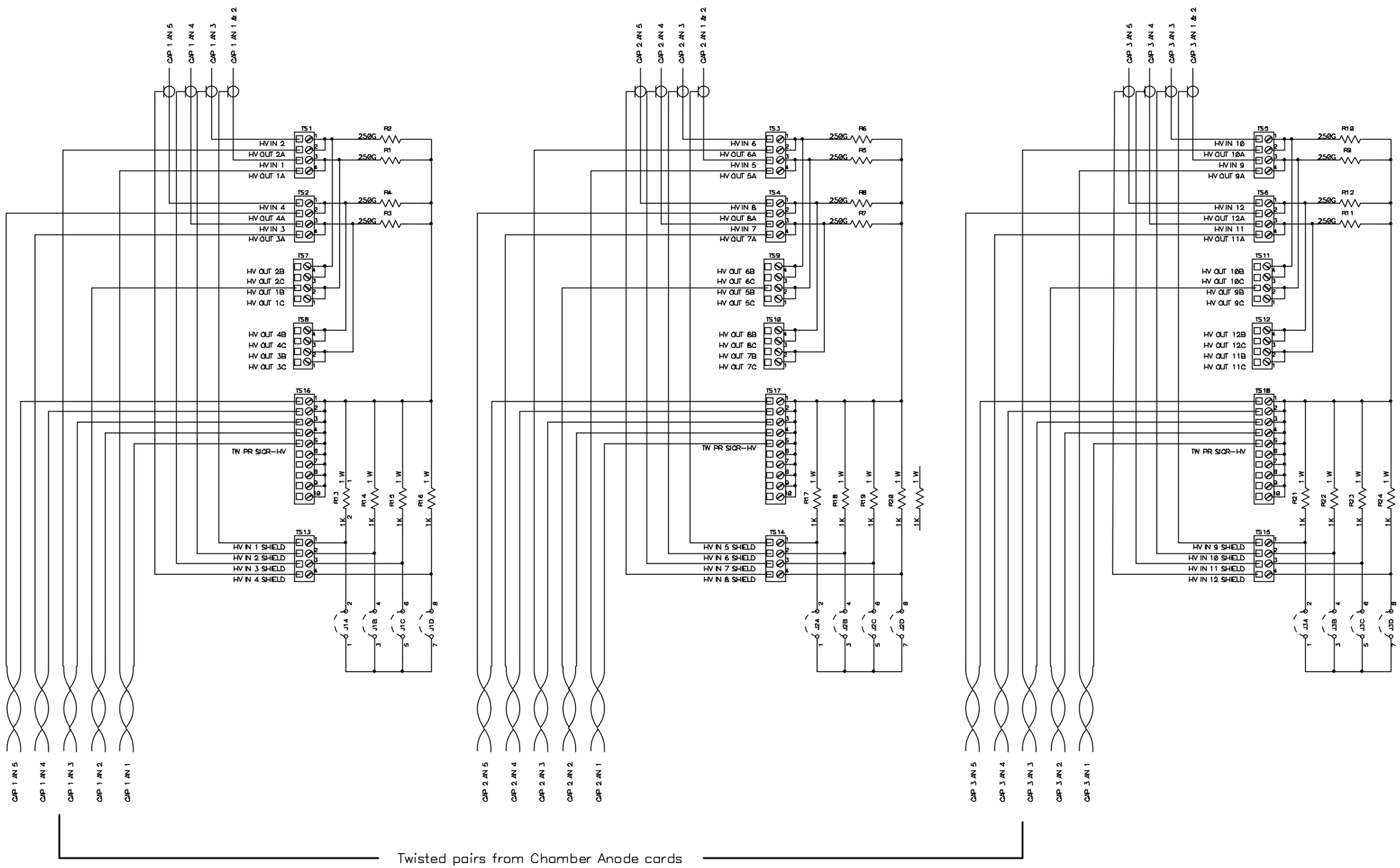

Los Alamos National Laboratory		
Title: MUON TRACKING HV DIST BOX 2 South		
SCHEMATIC OCTANT 2		
Size C	Date Originated: 14 April 1999	
	Last Revised: 16 Nov 2000	
LANL DWG #: 63Y299047A		Approved By: W. Sondheim
PHENIX #: 105-0312-223		Drawn by: G. Hart , P-25
Filename: ST 2 S HV DIST BOX.sch		Sheet 2 of 8

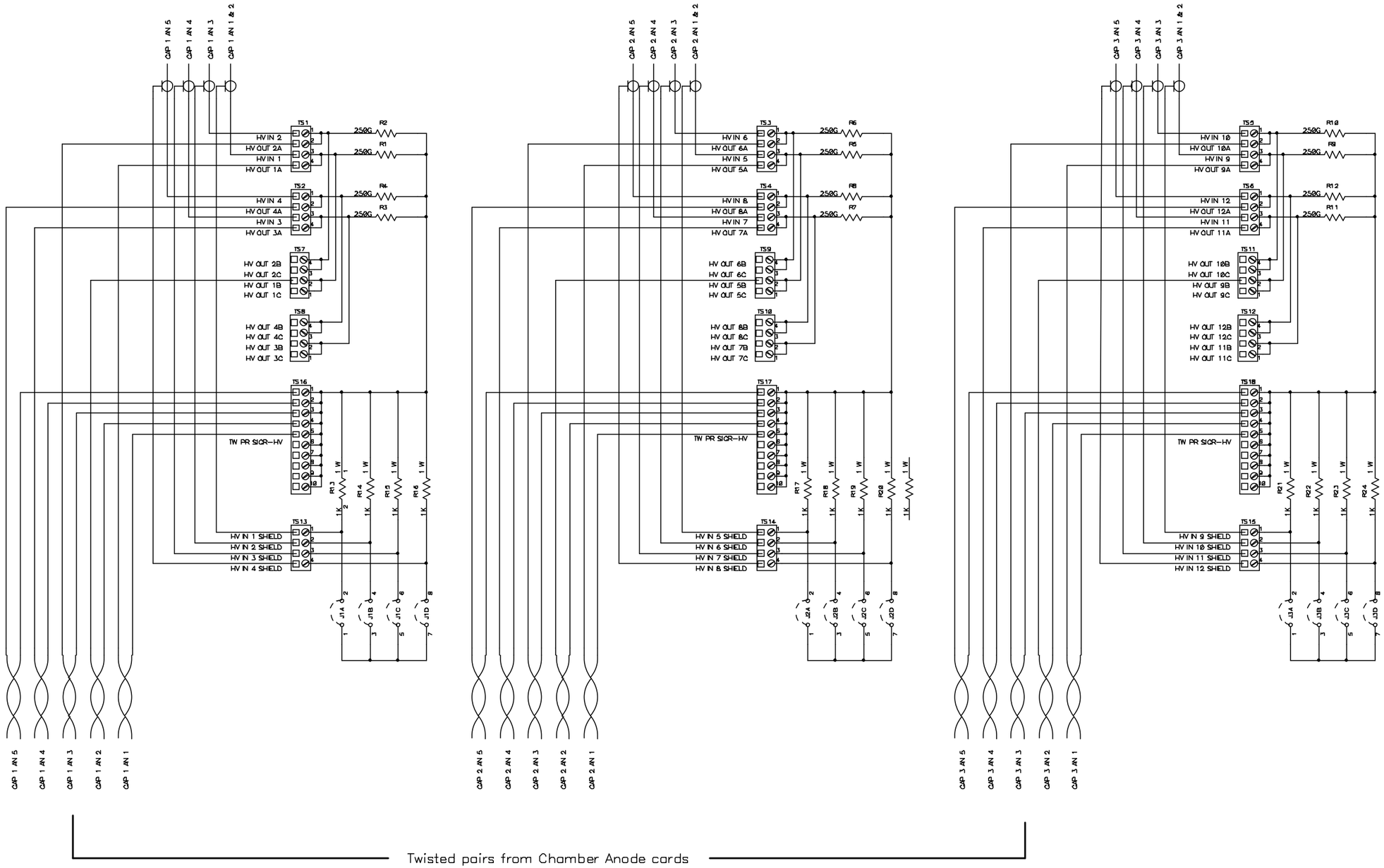

Los Alamos National Laboratory		
Title: MUON TRACKING HV DIST BOX 2 South		
SCHEMATIC OCTANT 3		
Size C	Date Originated: 14 April 1999	
	Last Revised: 16 Nov 2000	
LANL DWG #: 63Y299047A		Approved By: W. Sondheim
PHENIX #: 105-0312-223		Drawn by: G. Hart . P-25
Filename: ST 2 S HV DIST BOX.sch		Sheet 3 of 8

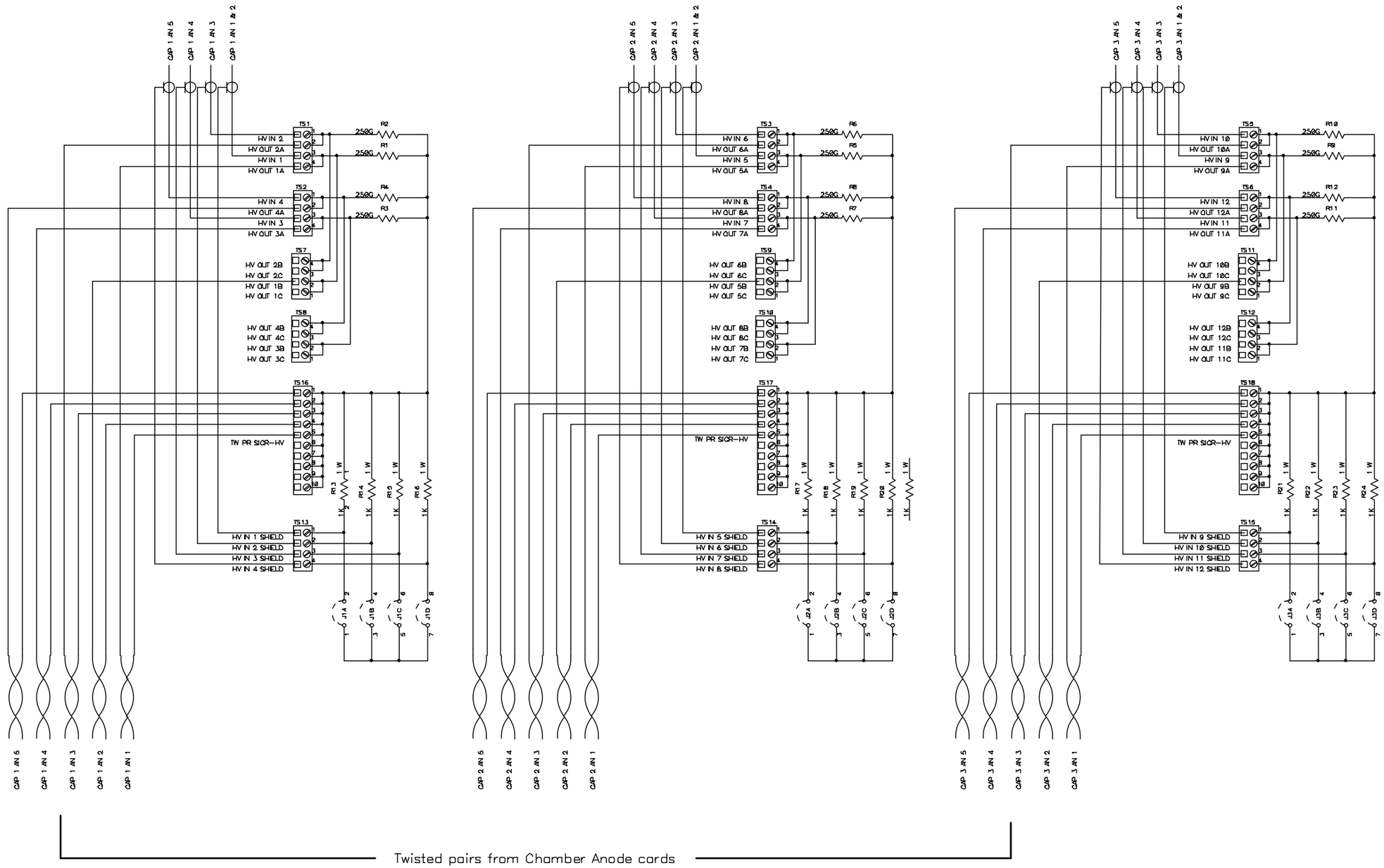

Los Alamos National Laboratory		
Title: MUON TRACKING HV DIST BOX 2 South		
SCHEMATIC OCTANT 4		
Size C	Date Originated: 14 April 1999	
	Last Revised: 16 Nov 2000	
LANL DWG #: 63Y299047A		Approved By: W. Sondheim
PHENIX #: 105-0312-223		Drawn by: G. Hart . P-25
Filename: ST 2 S HV DIST BOX.sch		Sheet 4 of 8

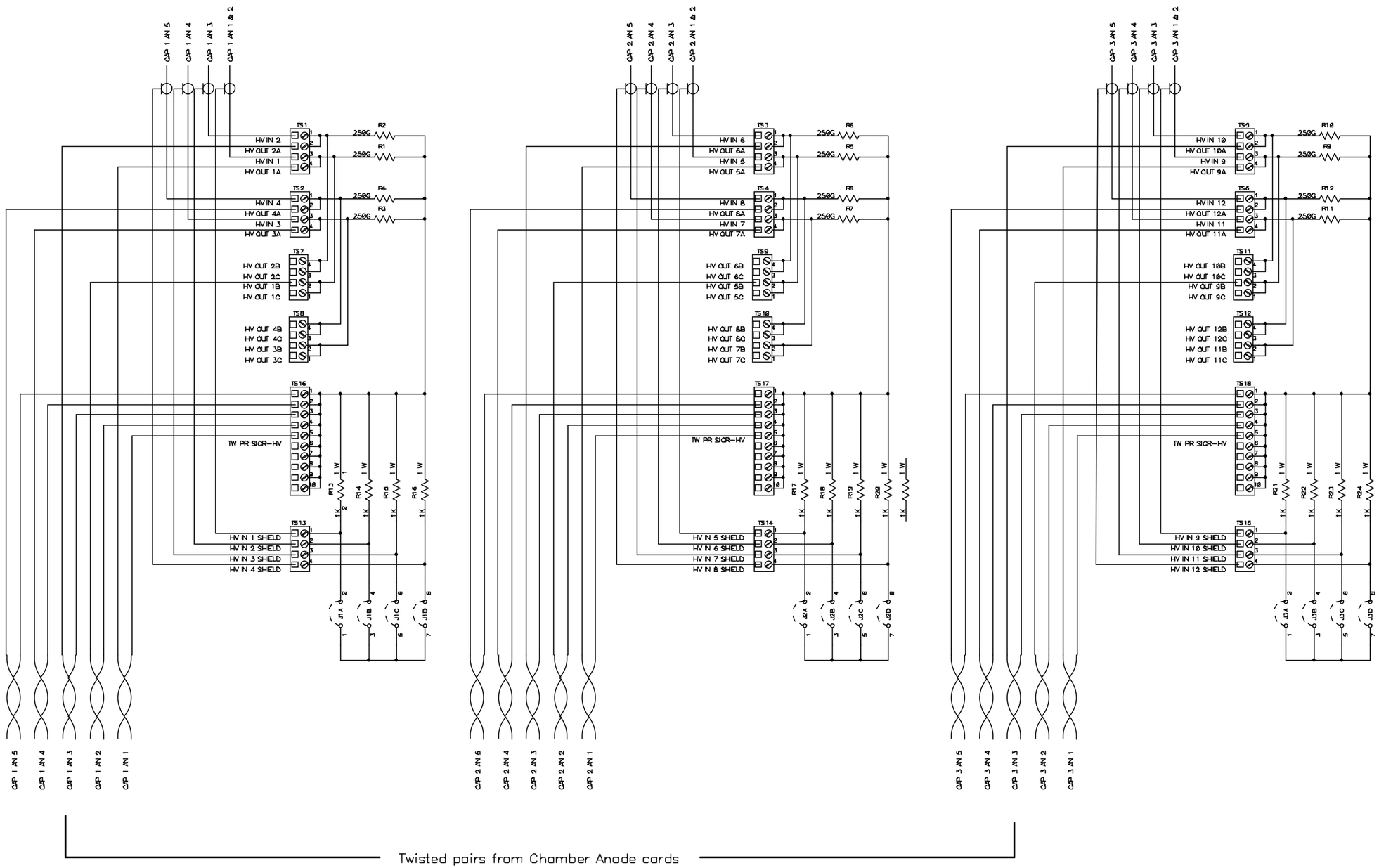

Los Alamos National Laboratory		
Title: MUON TRACKING HV DIST BOX 2 South		
SCHEMATIC OCTANT 5		
Size C	Date Originated: 14 April 1999	
	Last Revised: 16 Nov 2000	
LANL DWG #: 63Y299047A		Approved By: W. Sondheim
PHENIX #: 105-0312-223		Drawn by: G. Hart , P-25
Filename: ST 2 S HV DIST BOX.sch		Sheet 5 of 8

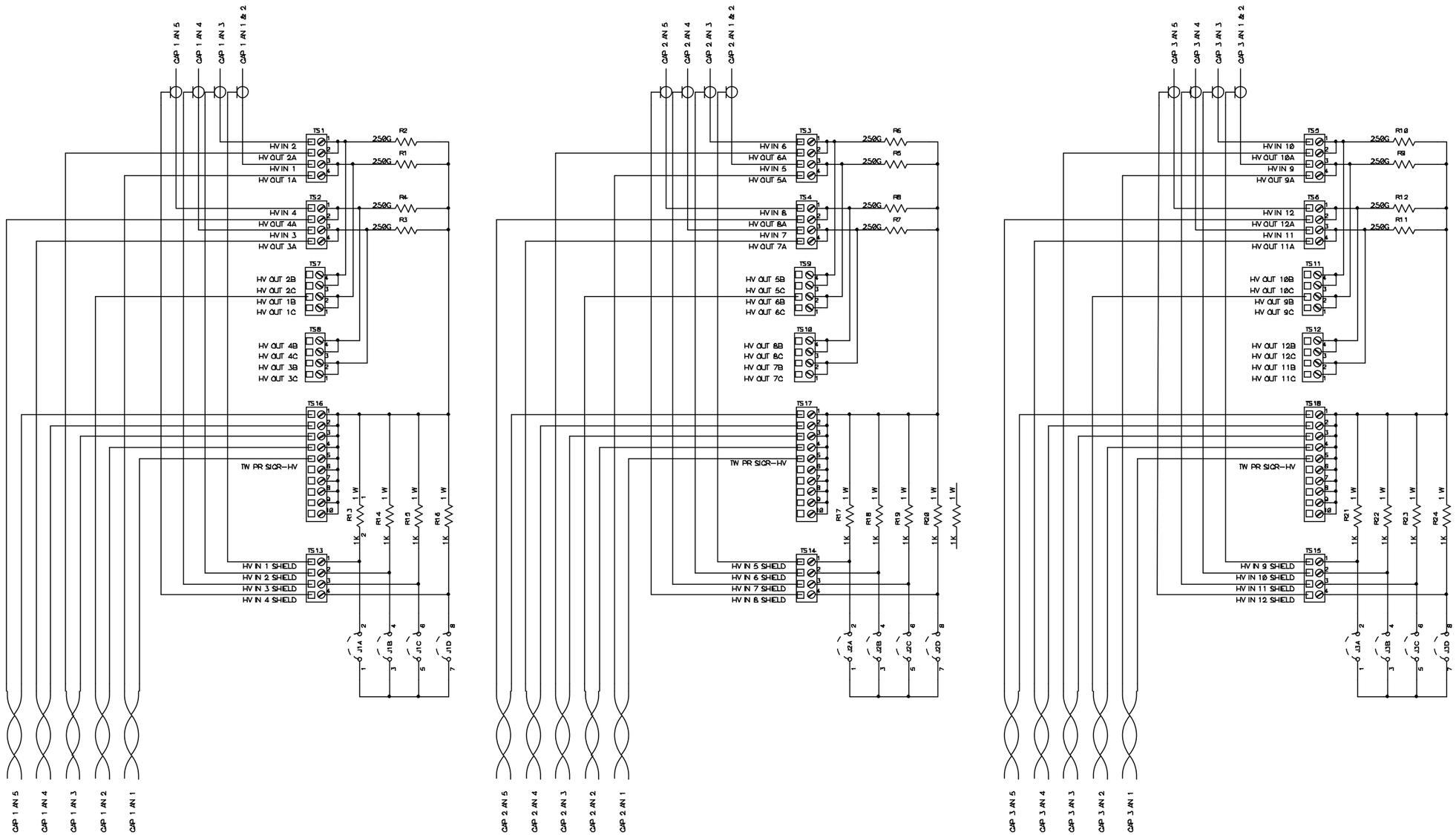

Los Alamos National Laboratory		
Title: MUON TRACKING HV DIST BOX 2 South		
SCHEMATIC OCTANT 6		
Size C	Date Originated: 14 April 1999	
	Last Revised: 16 Nov 2000	
LANL DWG #: 63Y299047A		Approved By: W. Sondheim
PHENIX #: 105-0312-223		Drawn by: G. Hart . P-25
Filename: ST 2 S HV DIST BOX.sch		Sheet 6 of 8

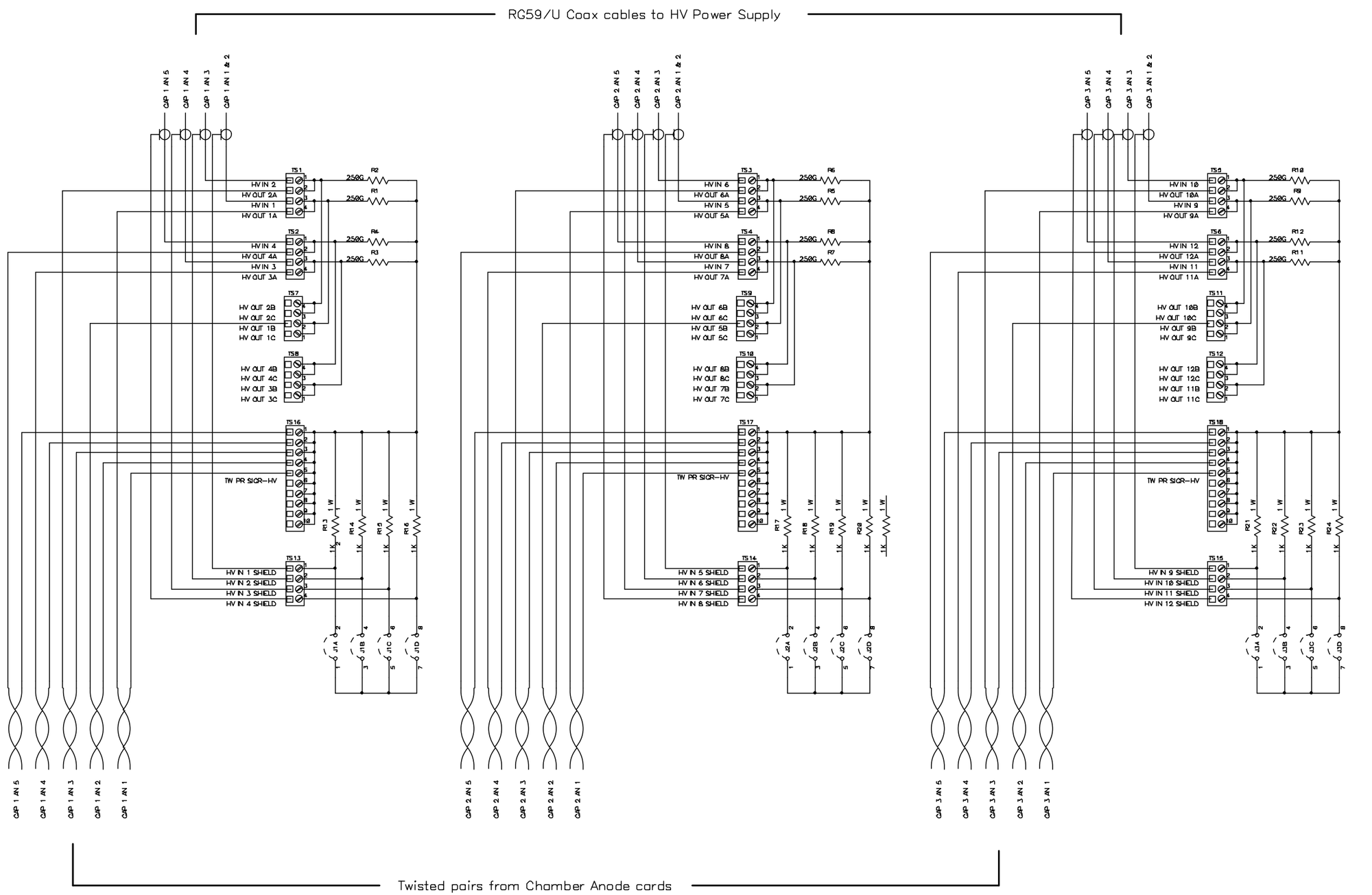

Los Alamos National Laboratory		
Title: MUON TRACKING HV DIST BOX 2 South		
SCHEMATIC OCTANT 7		
Size C	Date Originated: 14 April 1999	
	Last Revised: 16 Nov 2000	
LANL DWG #: 63Y299047A		Approved By: W. Sondheim
PHENIX #: 105-0312-223		Drawn by: G. Hart . P-25
Filename: ST 2 S HV DIST BOX.sch		Sheet 7 of 8

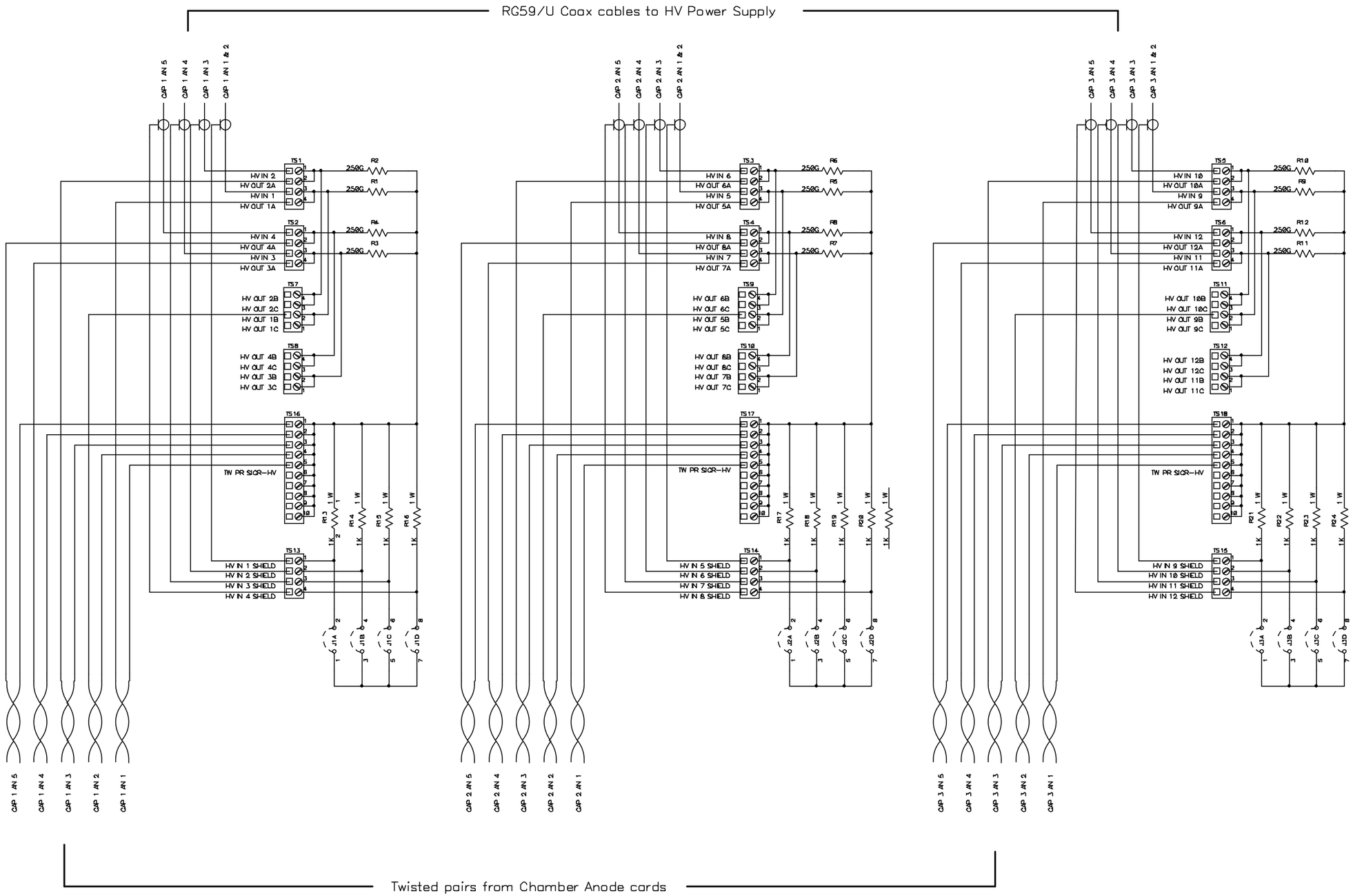

Los Alamos National Laboratory		
Title: MUON TRACKING HV DIST BOX 2 South		
SCHEMATIC OCTANT 8		
Size C	Date Originated: 14 April 1999	
	Last Revised: 16 Nov 2000	
LANL DWG #: 63Y299047A		Approved By:W. Sondheim
PHENIX #: 105-0312-223		Drawn by: G. Hart , P-25
Filename: ST 2 S HV DIST BOX.sch		Sheet 8 of 8

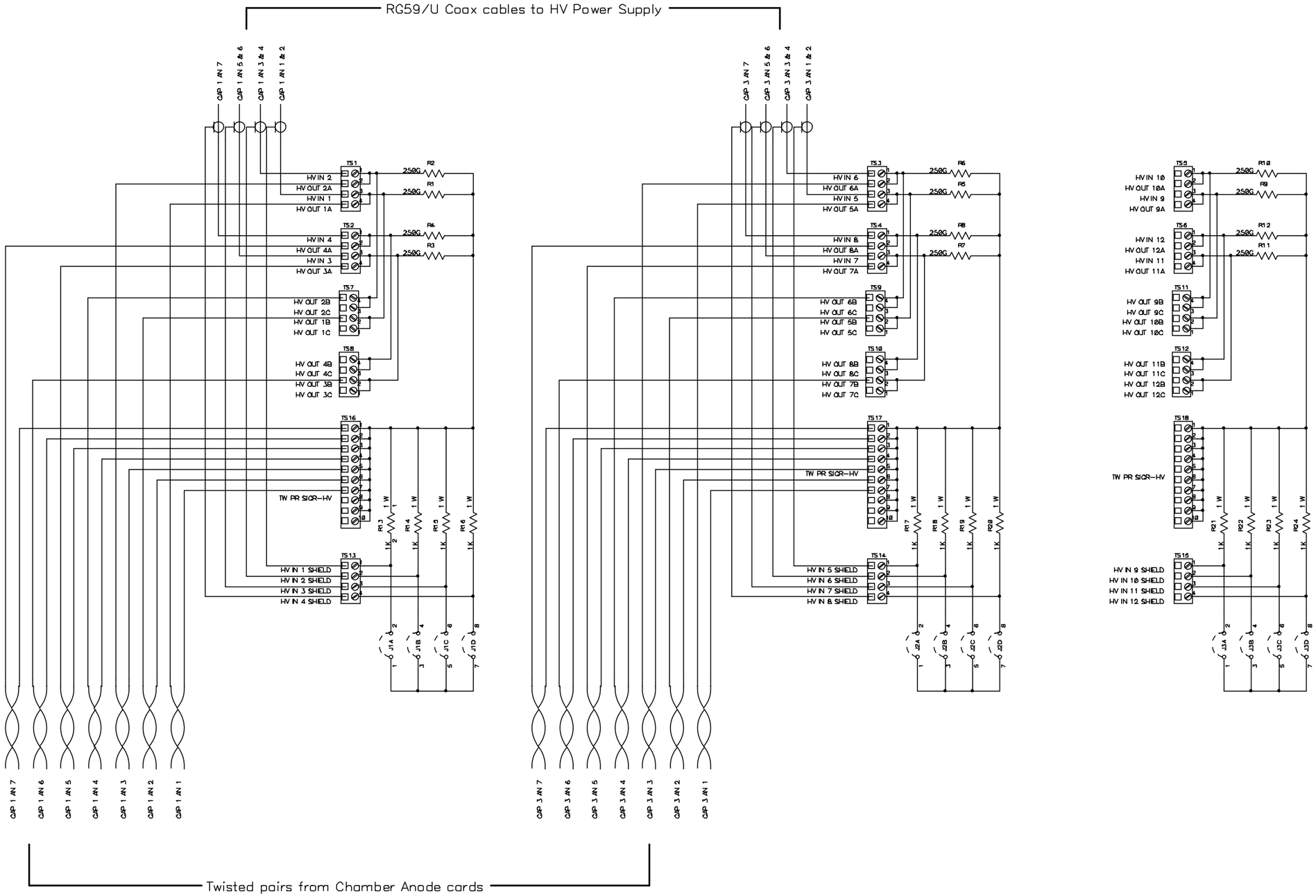

Los Alamos National Laboratory		
Title: MUON TRACKING HV DIST BOX 3 South		
SCHEMATIC OCTANT 1		
Size C	Date Originated: 14 April 1999	
	Last Revised: 16 Nov 2000	
LANL DWG #: 63Y299047A		Approved By: W. Sondheim
PHENIX #: 105-0312-225		Drawn by: G. Hart . P-25
Filename: ST 3 S HV DIST BOX.sch		Sheet 1 of 8

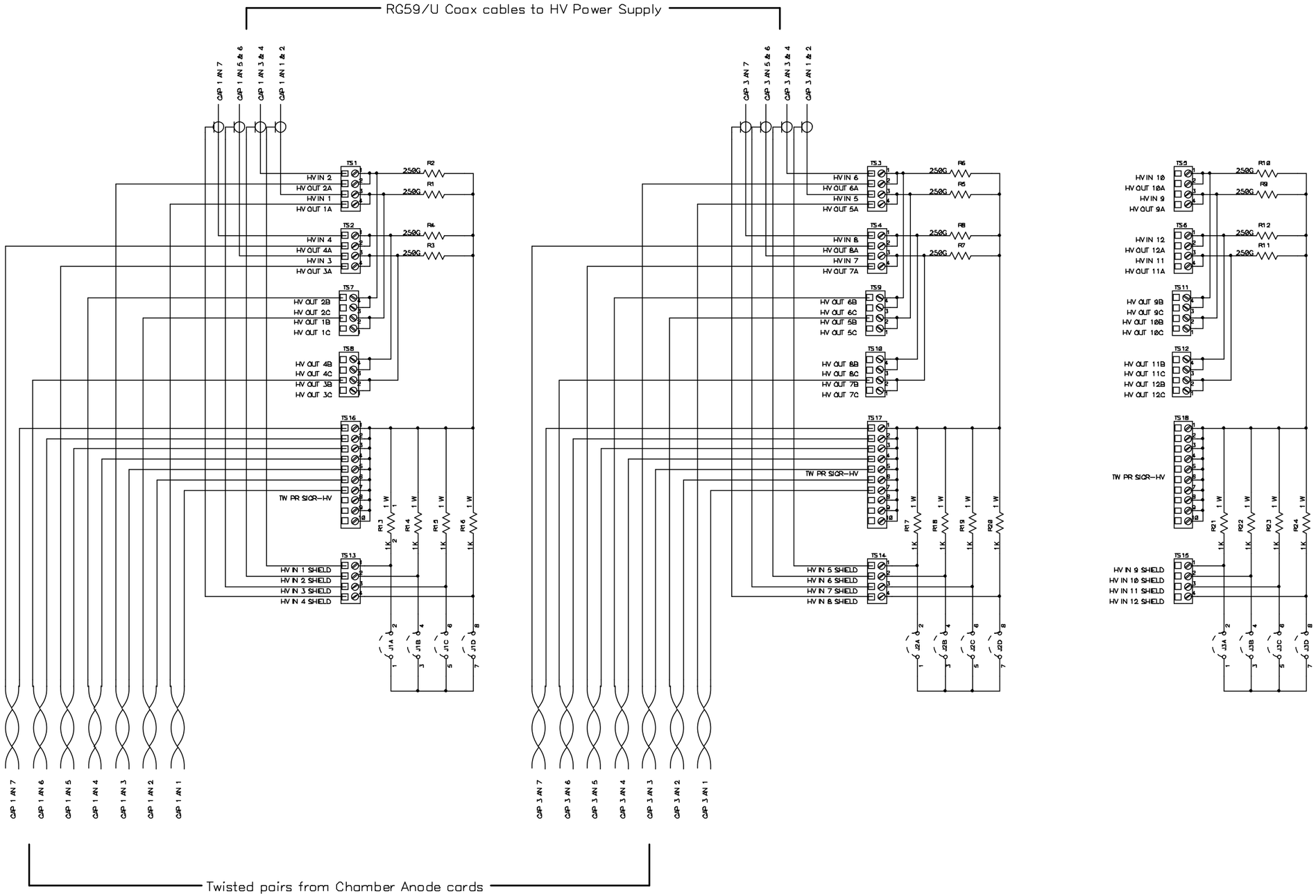

Los Alamos National Laboratory		
Title: MUON TRACKING HV DIST BOX 3 South		
SCHEMATIC OCTANT 2		
Size C	Date Originated: 14 April 1999	
	Last Revised: 16 Nov 2000	
LANL DWG #: 63Y299047A		Approved By: W. Sondheim
PHENIX #: 105-0312-225		Drawn by: G. Hart , P-25
Filename: ST 3 S HV DIST BOX.sch		Sheet 2 of 8

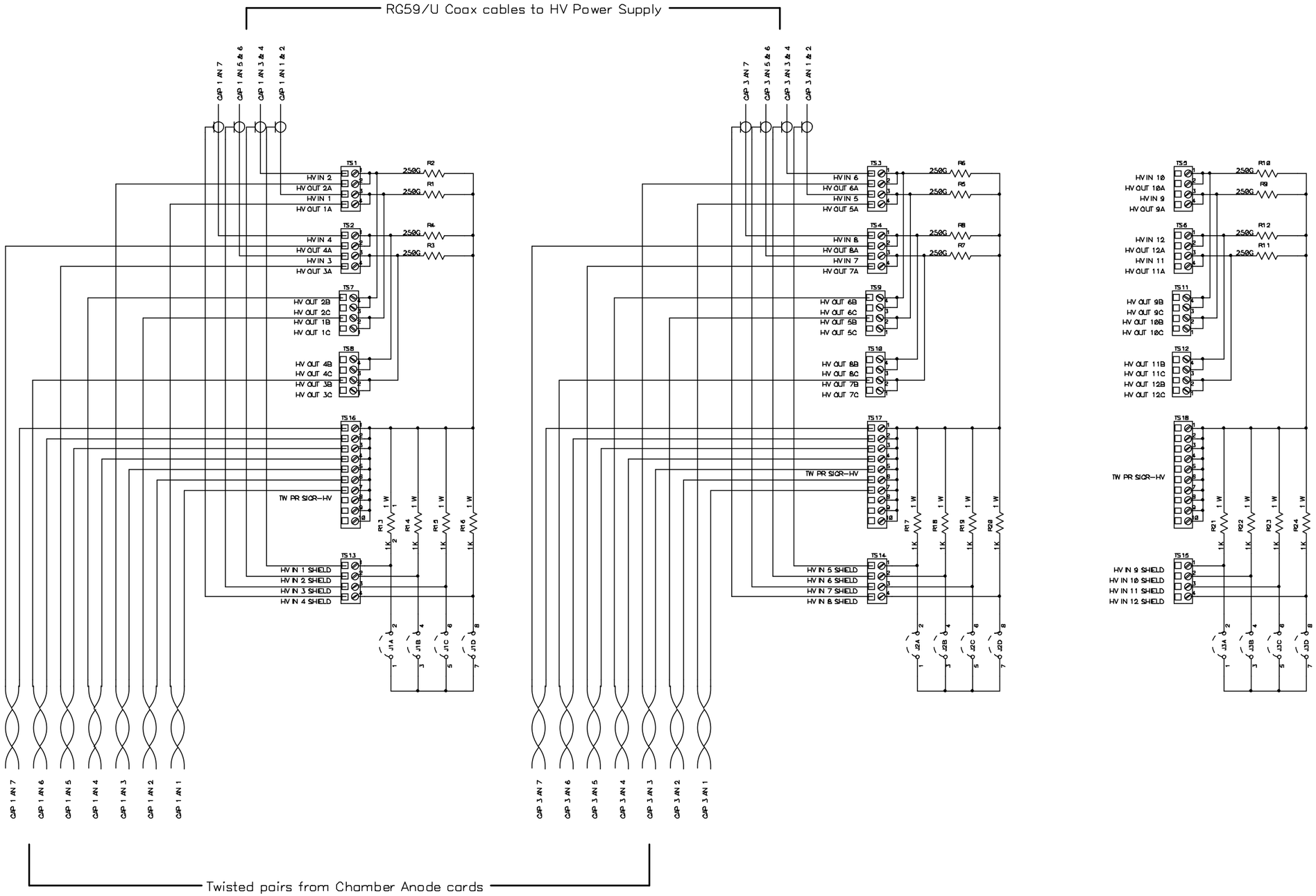

Los Alamos National Laboratory		
Title: MUON TRACKING HV DIST BOX 3 South		
SCHEMATIC OCTANT 3		
Size C	Date Originated: 14 April 1999	
	Last Revised: 16 Nov 2000	
LANL DWG #: 63Y299047A		Approved By: W. Sondheim
PHENIX #: 105-0312-225		Drawn by: G. Hart , P-25
Filename: ST 3 S HV DIST BOX.sch		Sheet 3 of 8

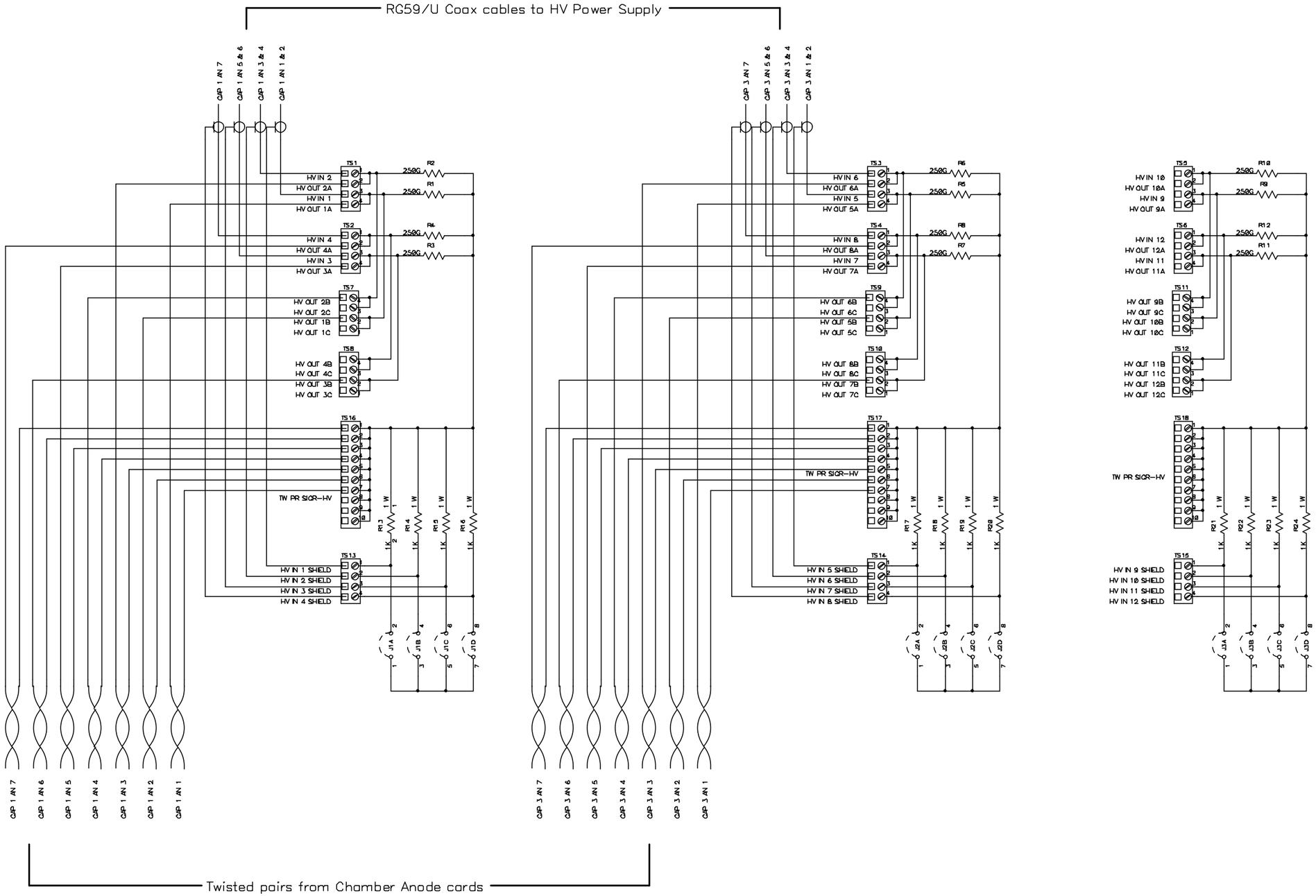

Los Alamos National Laboratory		
Title: MUON TRACKING HV DIST BOX 3 South		
SCHEMATIC OCTANT 4		
Size C	Date Originated: 14 April 1999	
	Last Revised: 16 Nov 2000	
LANL DWG #: 63Y299047A		Approved By: W. Sondheim
PHENIX #: 105-0312-225		Drawn by: G. Hart . P-25
Filename: ST 3 S HV DIST BOX.sch		Sheet 4 of 8

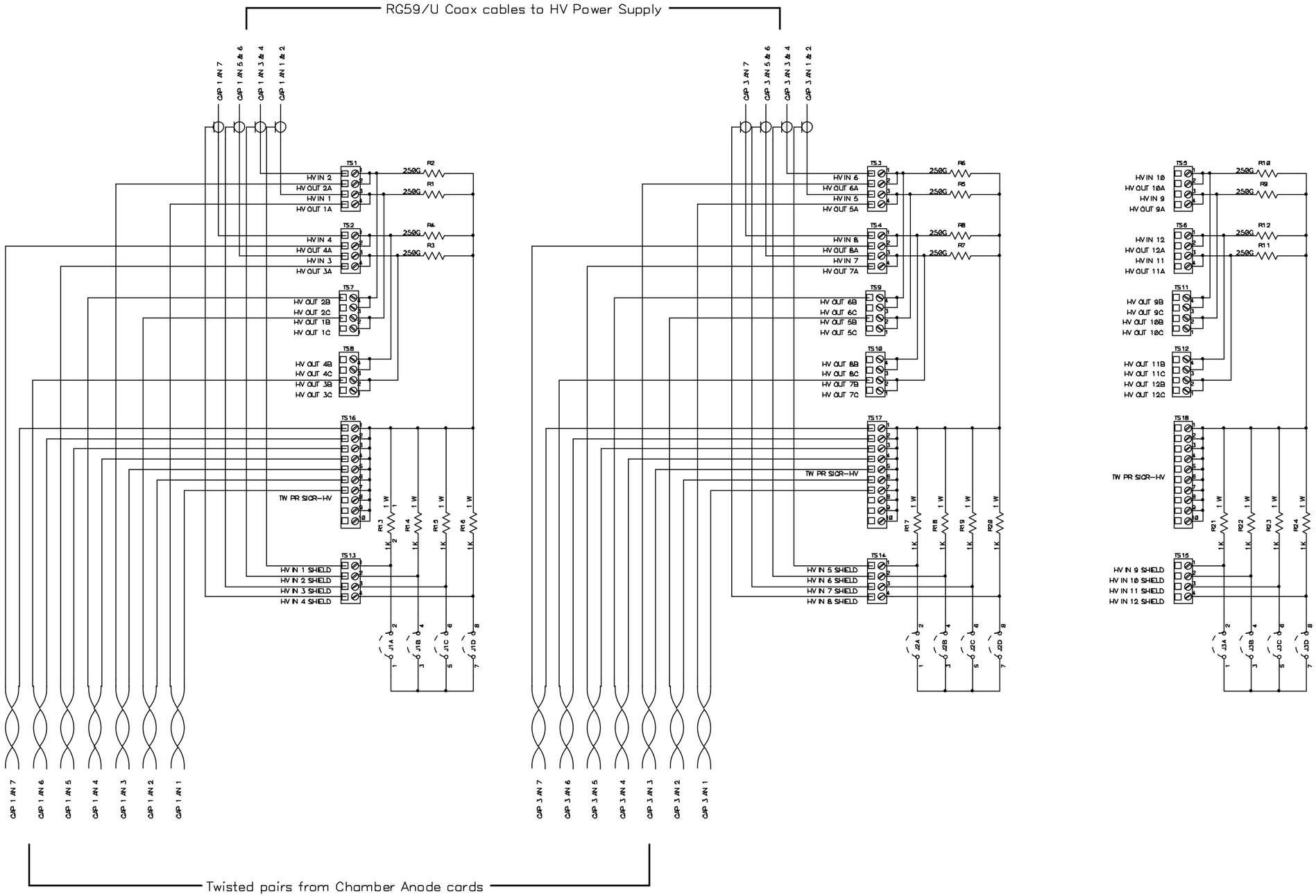

Los Alamos National Laboratory		
Title: MUON TRACKING HV DIST BOX 3 South		
SCHEMATIC OCTANT 5		
Size C	Date Originated: 14 April 1999	
	Last Revised: 16 Nov 2000	
LANL DWG #: 63Y299047A		Approved By:W. Sondheim
PHENIX #: 105-0312-225		Drawn by: G. Hart , P-25
Filename: ST 3 S HV DIST BOX.sch		Sheet 5 of 8

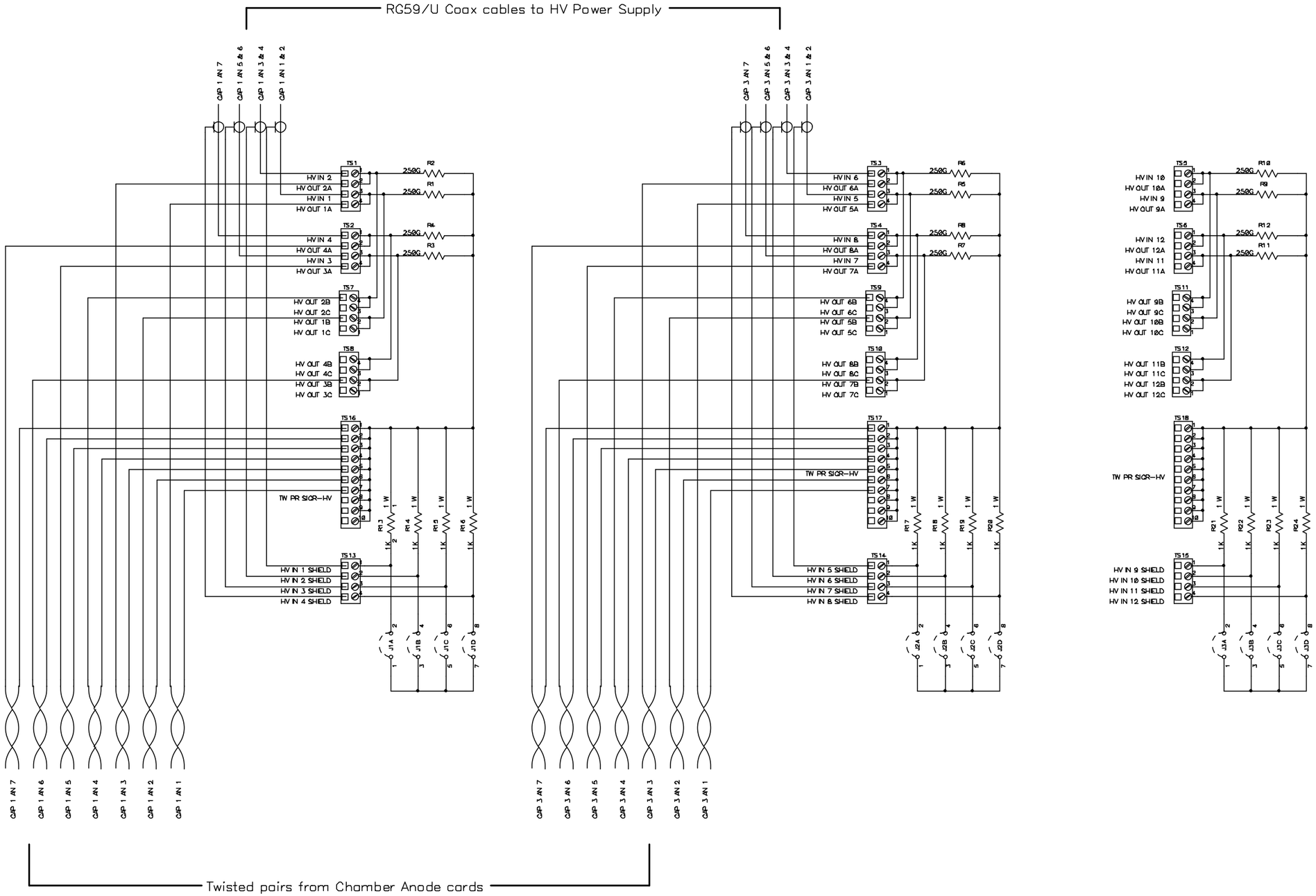

Los Alamos National Laboratory		
Title: MUON TRACKING HV DIST BOX 3 South		
SCHEMATIC OCTANT 6		
Size C	Date Originated: 14 April 1999	
	Last Revised: 16 Nov 2000	
LANL DWG #: 63Y299047A		Approved By: W. Sondheim
PHENIX #: 105-0312-225		Drawn by: G. Hart . P-25
Filename: ST 3 S HV DIST BOX.sch		Sheet 6 of 8

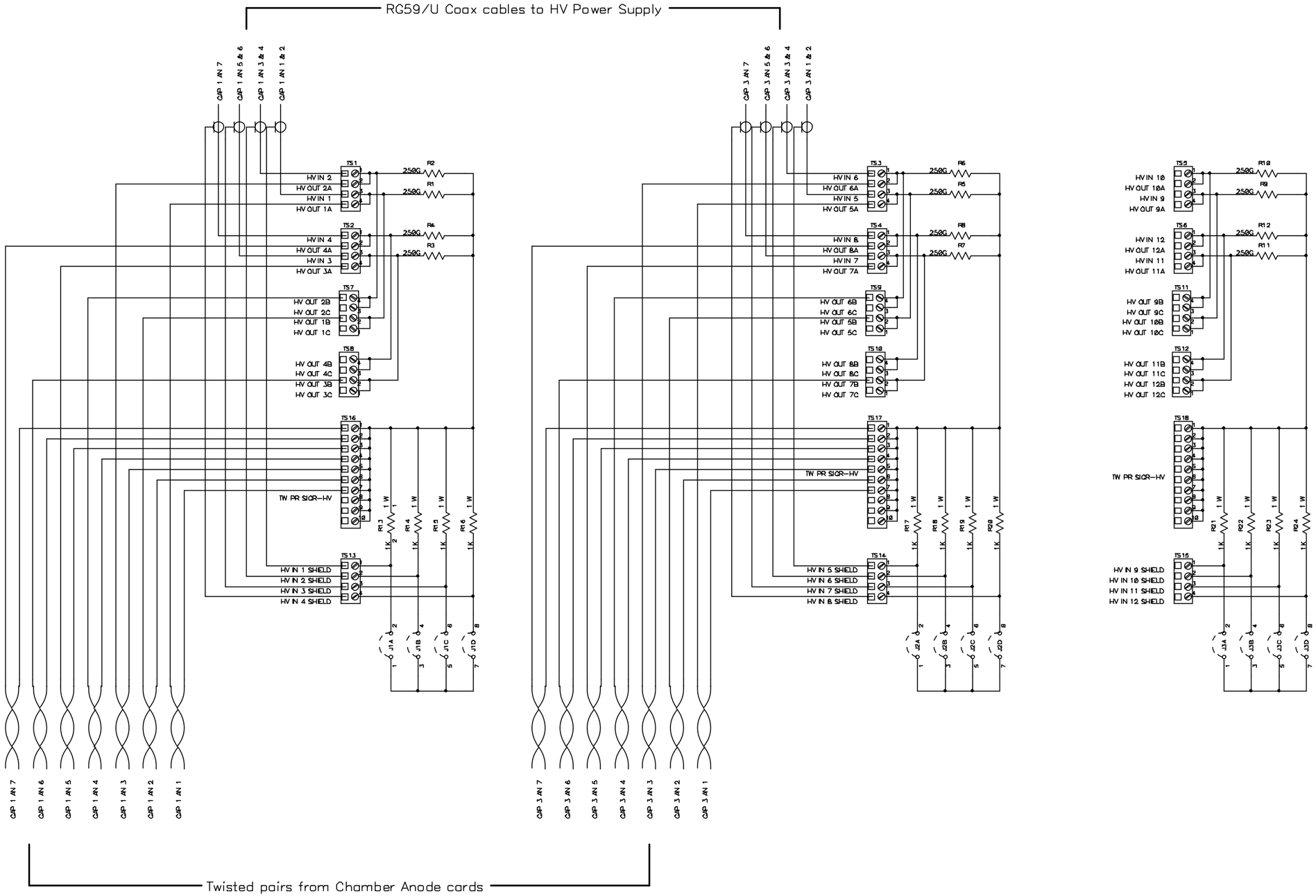

Los Alamos National Laboratory		
Title: MUON TRACKING HV DIST BOX 3 South		
SCHEMATIC OCTANT 7		
Size C	Date Originated: 14 April 1999	
	Last Revised: 16 Nov 2000	
LANL DWG #: 63Y299047A		Approved By:W. Sondheim
PHENIX #: 105-0312-225		Drawn by: G. Hart , P-25
Filename: ST 3 S HV DIST BOX.sch		Sheet 7 of 8

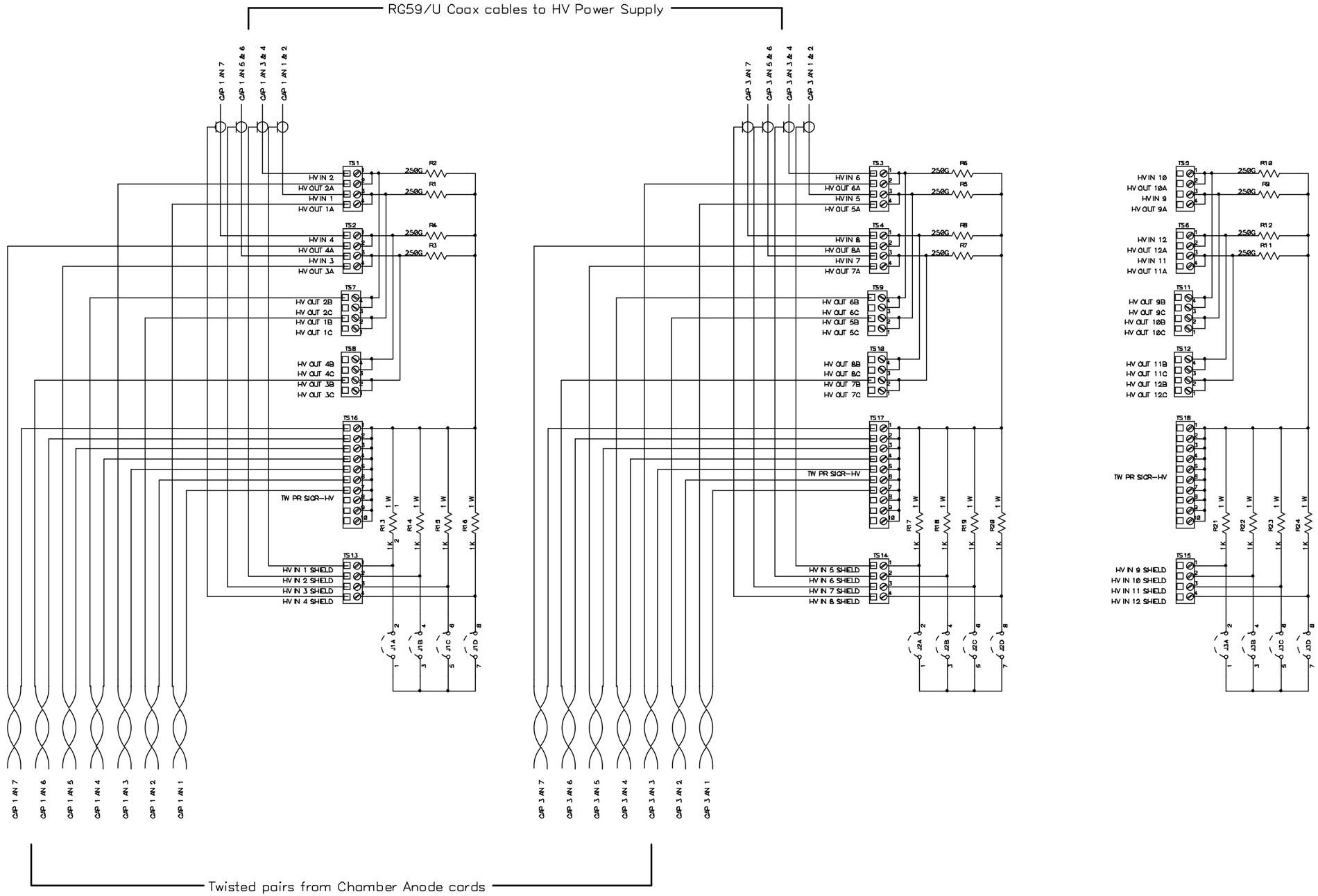

Los Alamos National Laboratory		
Title: MUON TRACKING HV DIST BOX 3 South		
SCHEMATIC OCTANT 8		
Size C	Date Originated: 14 April 1999	
	Last Revised: 16 Nov 2000	
LANL DWG #: 63Y299047A		Approved By:W. Sondheim
PHENIX #: 105-0312-225		Drawn by: G. Hart , P-25
Filename: ST 3 S HV DIST BOX.sch		Sheet 8 of 8

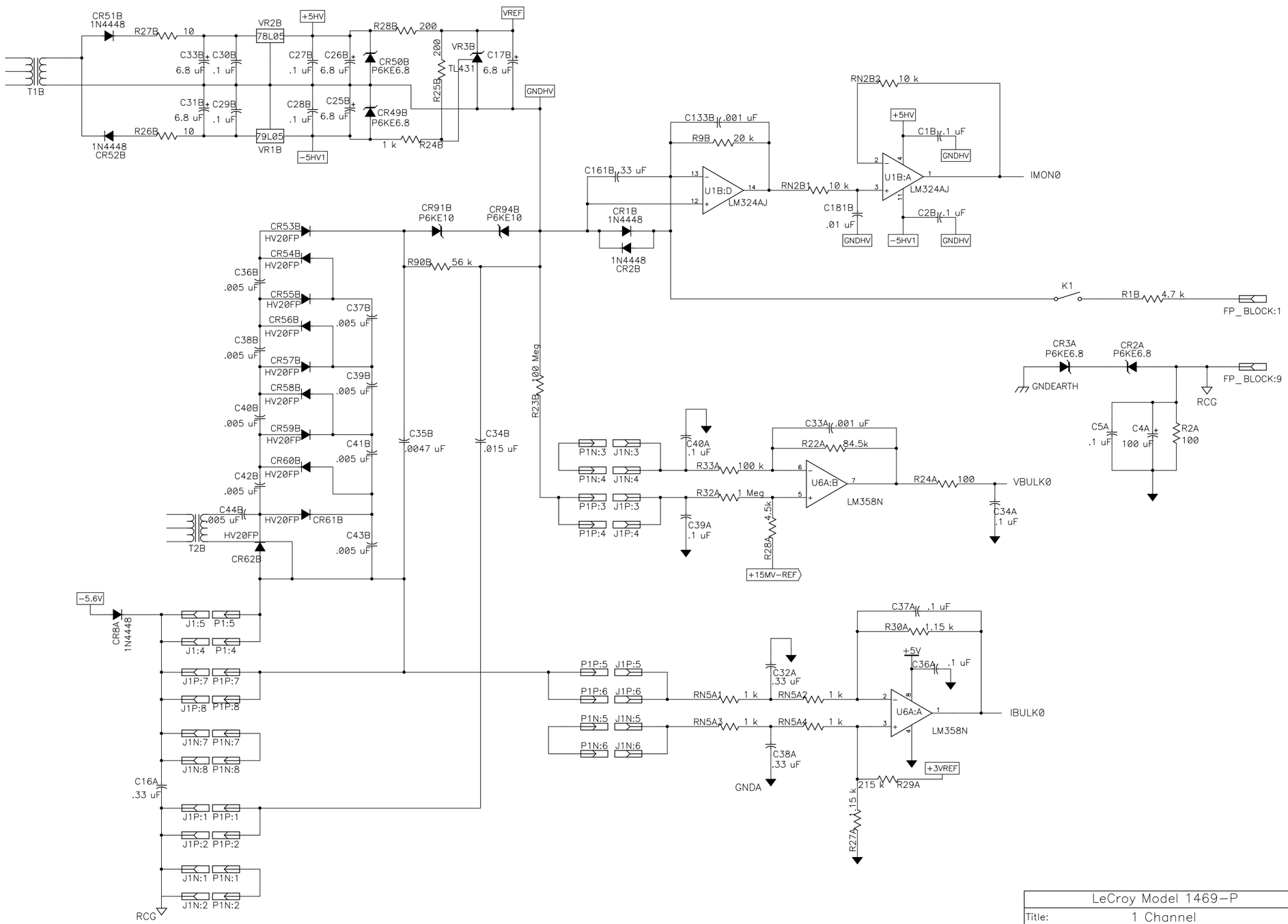

RCG is remote chassis ground and is connected to the shield/ground of the SHV or block connector Chassis ground comes from the backplane connector. GND_A comes from the backplane but is run separately from chassis ground, although both come from the same place

Ref Designators have a letter after each number.
A = LeCroy Schematic 1469−1
B = LeCroy Schematic 1469−2N&P

LeCroy Model 1469−P		
Title:	1 Channel Schematic	
Size	Date Originated: 4 Oct 1998	
	Last Revised: 4 Oct 1998	
LANL DWG #:		Approved By:{Approved By}
PHENIX DWG #:		Drawn by: G. Hart
Filename:	LeCROY1469P.SCH	Sheet of 1

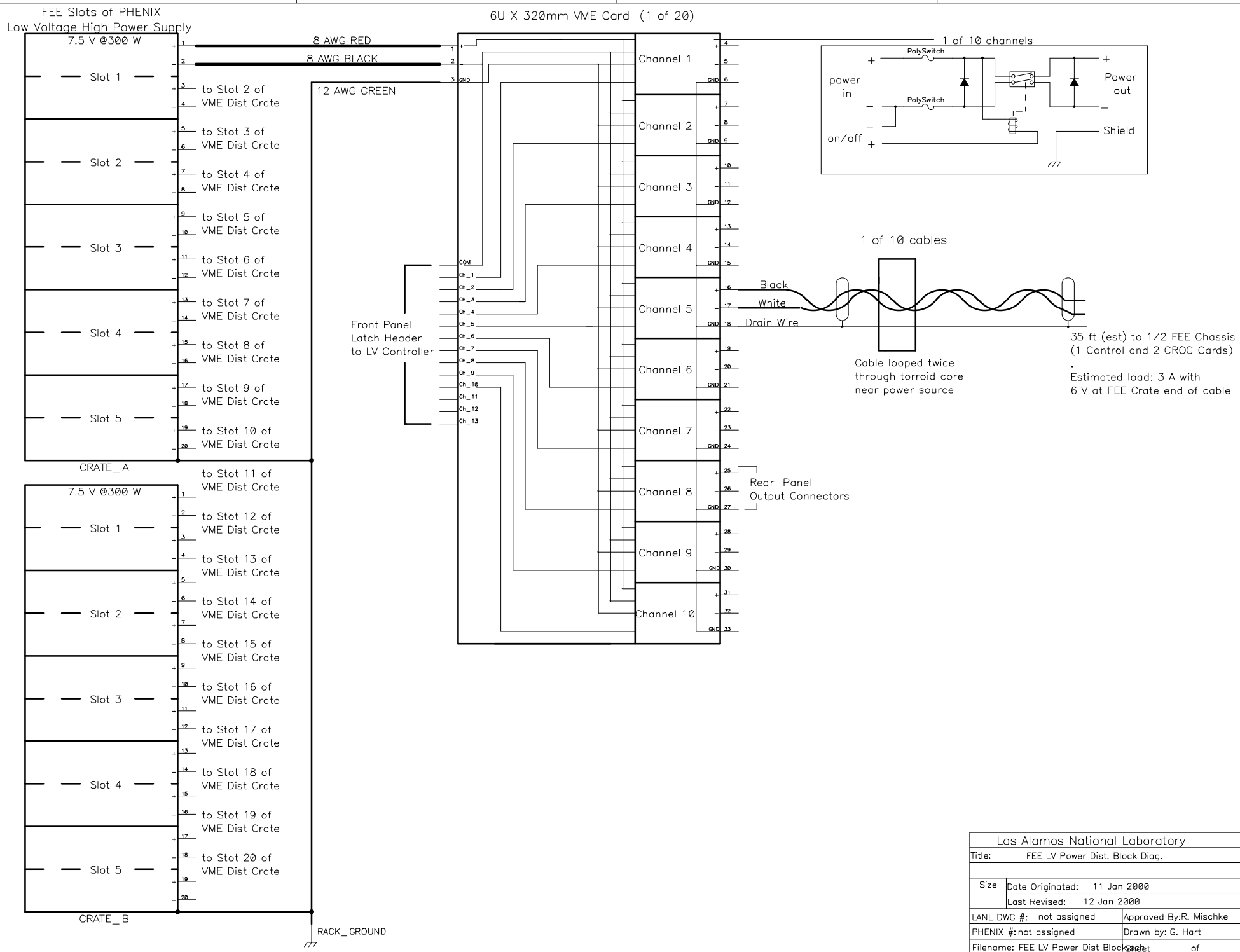
FEE Slots of PHENIX
Low Voltage High Power Supply
6U X 320mm VME Card (1 of 20)
7.5 V @300 W
Slot 1
Slot 2
Slot 3
Slot 4
Slot 5
CRATE_A
CRATE_B
8 AWG RED
8 AWG BLACK
12 AWG GREEN
RACK_GROUND
Front Panel
Latch Header
to LV Controller
Channel 1
Channel 2
Channel 3
Channel 4
Channel 5
Channel 6
Channel 7
Channel 8
Channel 9
Channel 10
Rear Panel
Output Connectors
1 of 10 channels
PolySwitch
power in
on/off
Power out
Shield
1 of 10 cables
Black
White
Drain Wire
Cable looped twice
through torroid core
near power source
35 ft (est) to 1/2 FEE Chassis
(1 Control and 2 CROC Cards)
Estimated load: 3 A with
6 V at FEE Crate end of cable
Los Alamos National Laboratory
Title: FEE LV Power Dist. Block Diag.
Size
Date Originated: 11 Jan 2000
Last Revised: 12 Jan 2000
LANL DWG #: not assigned
Approved By: R. Mischke
PHENIX #: not assigned
Drawn by: G. Hart
Filename: FEE LV Power Dist Block.sch
Sheet of

REVISIONS			
REV	DESCRIPTION	DATE	APPROVED
-2	ADDED R11, DS11	3/6/00	
-3	ADDED C1, C2, HS1, JMP2, U11, U12 J12 WAS 3428-5002	3/6/00	

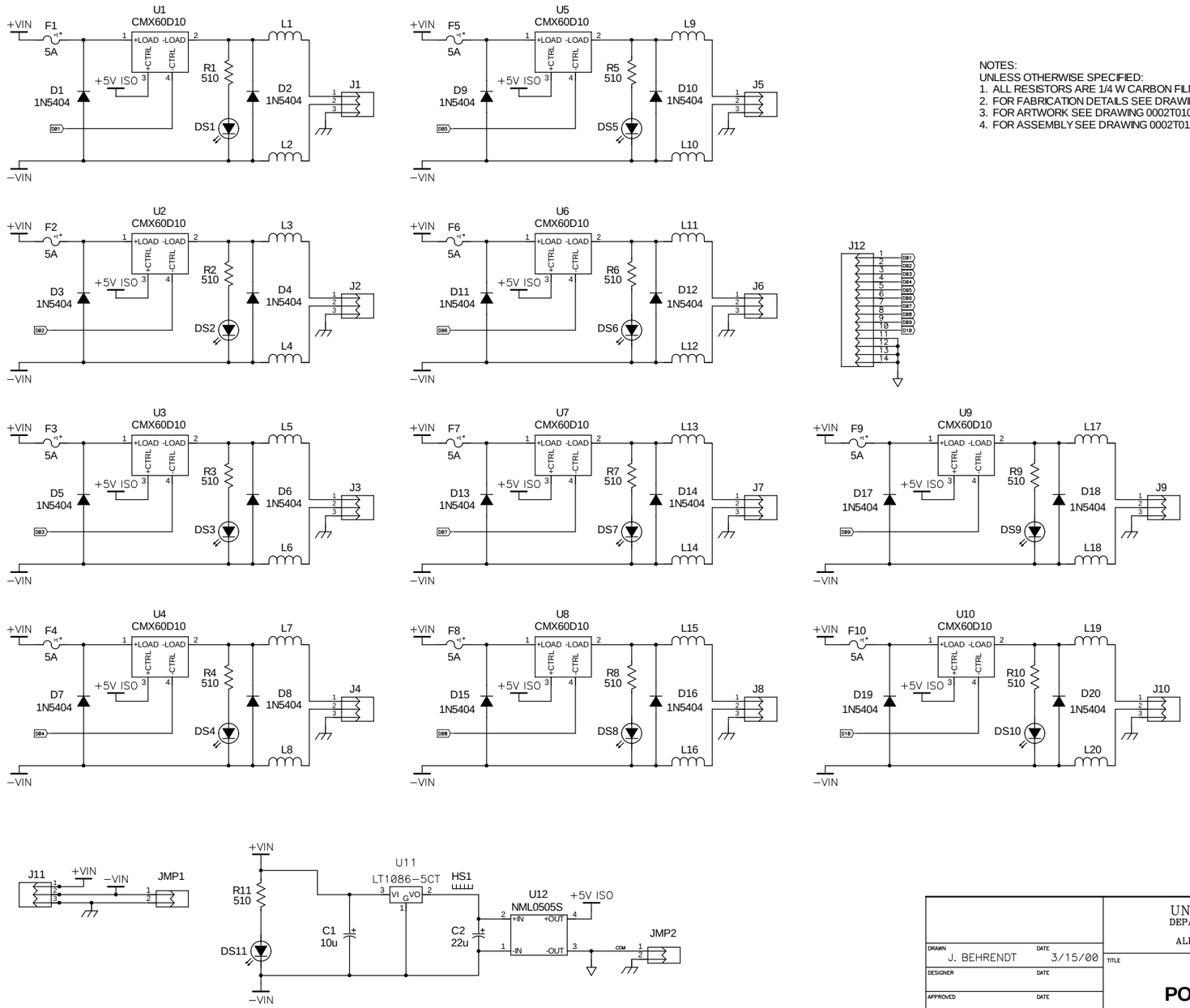

NOTES:
UNLESS OTHERWISE SPECIFIED:
1. ALL RESISTORS ARE 1/4 W CARBON FILM WITH VALUES IN OHMS.
2. FOR FABRICATION DETAILS SEE DRAWING 0002T0102.
3. FOR ARTWORK SEE DRAWING 0002T0103.
4. FOR ASSEMBLY SEE DRAWING 0002T0104.

PRELIMINARY – NOT FOR CONSTRUCTION

PLOTTED Mon Mar 05, 2001 15:41:33
CAD GENERATED DRAWING, MANUAL CHANGES NOT ALLOWED

UNIVERSITY OF NEW MEXICO
DEPARTMENT OF PHYSICS AND ASTRONOMY
ELECTRONICS SHOP
ALBUQUERQUE, NEW MEXICO, USA 87131

DRAWN J. BEHRENDT DATE 3/15/00
DESIGNER DATE
APPROVED DATE
ENGINEER DATE
DWG FILENAME 0002t01-3.sch

TITLE
LOW VOLTAGE POWER DISTRIBUTION

SIZE C | DWG NO 0002T0101 | REV -3
SCALE NONE | SHEET 1 OF 1

DWG NO 0002T0101 | SH 1 OF 1 | REV -3

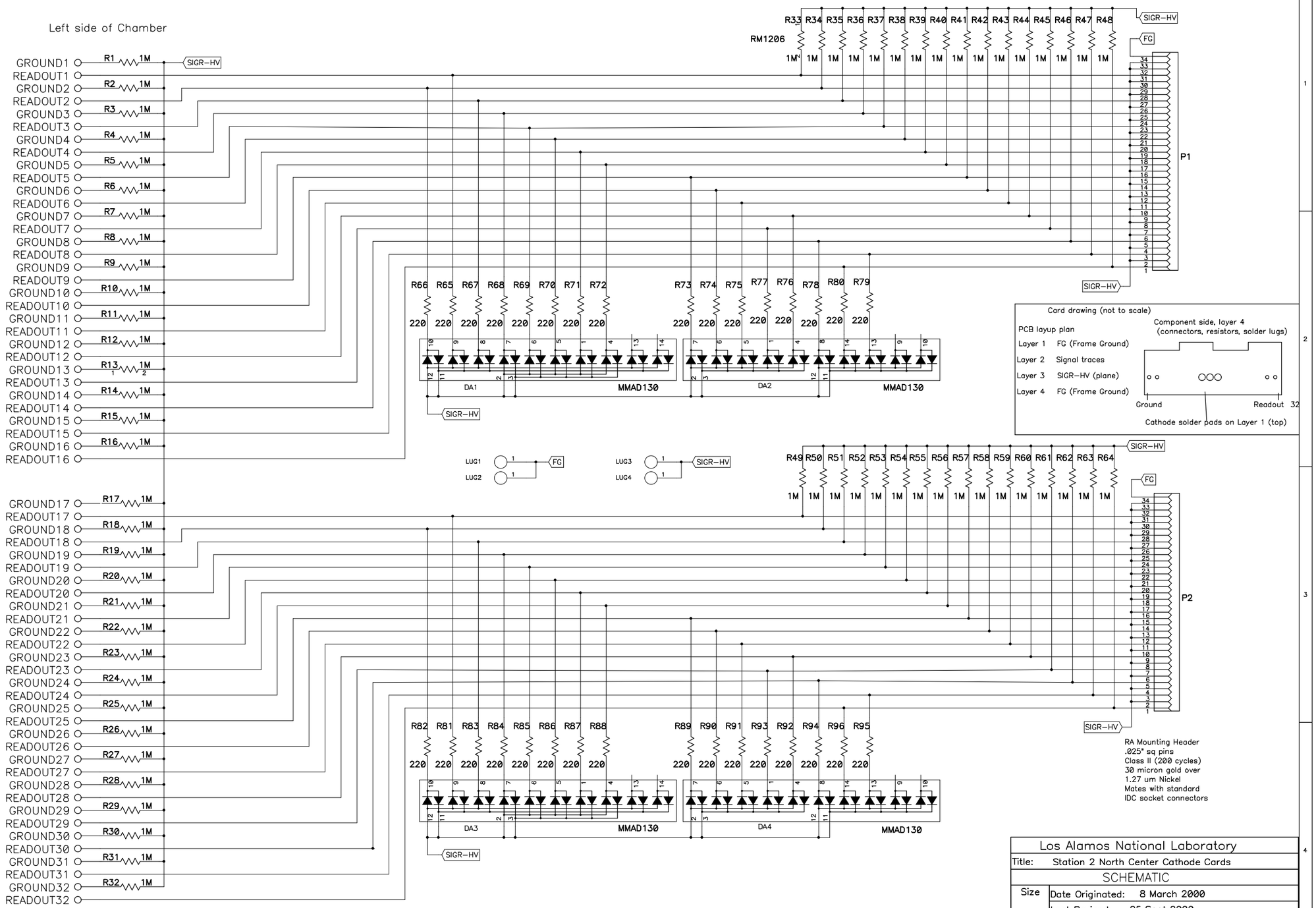
Left side of Chamber
GROUND1
READOUT1
GROUND2
READOUT2
GROUND3
READOUT3
GROUND4
READOUT4
GROUND5
READOUT5
GROUND6
READOUT6
GROUND7
READOUT7
GROUND8
READOUT8
GROUND9
READOUT9
GROUND10
READOUT10
GROUND11
READOUT11
GROUND12
READOUT12
GROUND13
READOUT13
GROUND14
READOUT14
GROUND15
READOUT15
GROUND16
READOUT16
GROUND17
READOUT17
GROUND18
READOUT18
GROUND19
READOUT19
GROUND20
READOUT20
GROUND21
READOUT21
GROUND22
READOUT22
GROUND23
READOUT23
GROUND24
READOUT24
GROUND25
READOUT25
GROUND26
READOUT26
GROUND27
READOUT27
GROUND28
READOUT28
GROUND29
READOUT29
GROUND30
READOUT30
GROUND31
READOUT31
GROUND32
READOUT32
R1 R2 R3 R4 R5 R6 R7 R8 R9 R10 R11 R12 R13 R14 R15 R16 R17 R18 R19 R20 R21 R22 R23 R24 R25 R26 R27 R28 R29 R30 R31 R32
1M
SIGR–HV
RM1206
R33 R34 R35 R36 R37 R38 R39 R40 R41 R42 R43 R44 R45 R46 R47 R48
FG
P1
R66 R65 R67 R68 R69 R70 R71 R72
R73 R74 R75 R77 R76 R78 R80 R79
220
DA1
DA2
MMAD130
LUG1
LUG2
LUG3
LUG4
R49 R50 R51 R52 R53 R54 R55 R56 R57 R58 R59 R60 R61 R62 R63 R64
P2
R82 R81 R83 R84 R85 R86 R87 R88
R89 R90 R91 R93 R92 R94 R96 R95
DA3
DA4
Card drawing (not to scale)
PCB layup plan
Layer 1 FG (Frame Ground)
Layer 2 Signal traces
Layer 3 SIGR–HV (plane)
Layer 4 FG (Frame Ground)
Component side, layer 4
(connectors, resistors, solder lugs)
Ground
Readout 32
Cathode solder pads on Layer 1 (top)
RA Mounting Header
.025" sq pins
Class II (200 cycles)
30 micron gold over
1.27 um Nickel
Mates with standard
IDC socket connectors
Los Alamos National Laboratory
Title: Station 2 North Center Cathode Cards
SCHEMATIC
Size
Date Originated: 8 March 2000
Last Revised: 25 Sept 2000
LANL DWG #:
Approved By: W. Sondheim
PHENIX #: 002–0212–213
Drawn by: G. Hart
Filename: 002–0212–213.sch
Sheet of

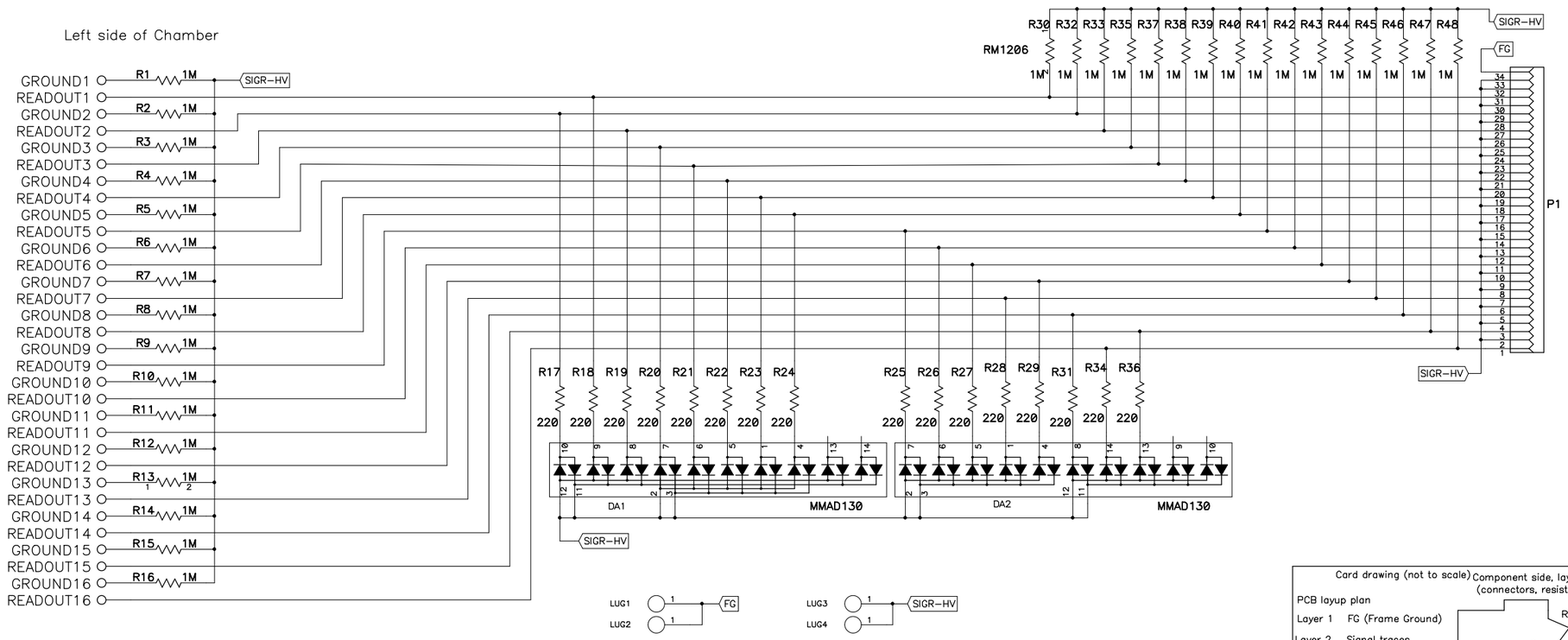

Card drawing (not to scale)

PCB layup plan

Layer 1	FG (Frame Ground)
Layer 2	Signal traces
Layer 3	SIGR-HV (plane)
Layer 4	FG (Frame Ground)

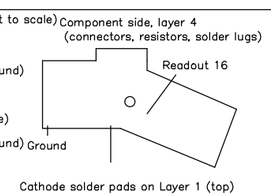

Los Alamos National Laboratory	
Title: Station 2 North Front Right Cathode Card	
Size	Date Originated: 8 March 2000
	Last Revised: 20 Sept 2000
LANL DWG #:	Approved By: W. Sondheim
PHENIX #: 002-0212-214	Drawn by: G. Hart
Filename: 002-0212-214.sch	Sheet of

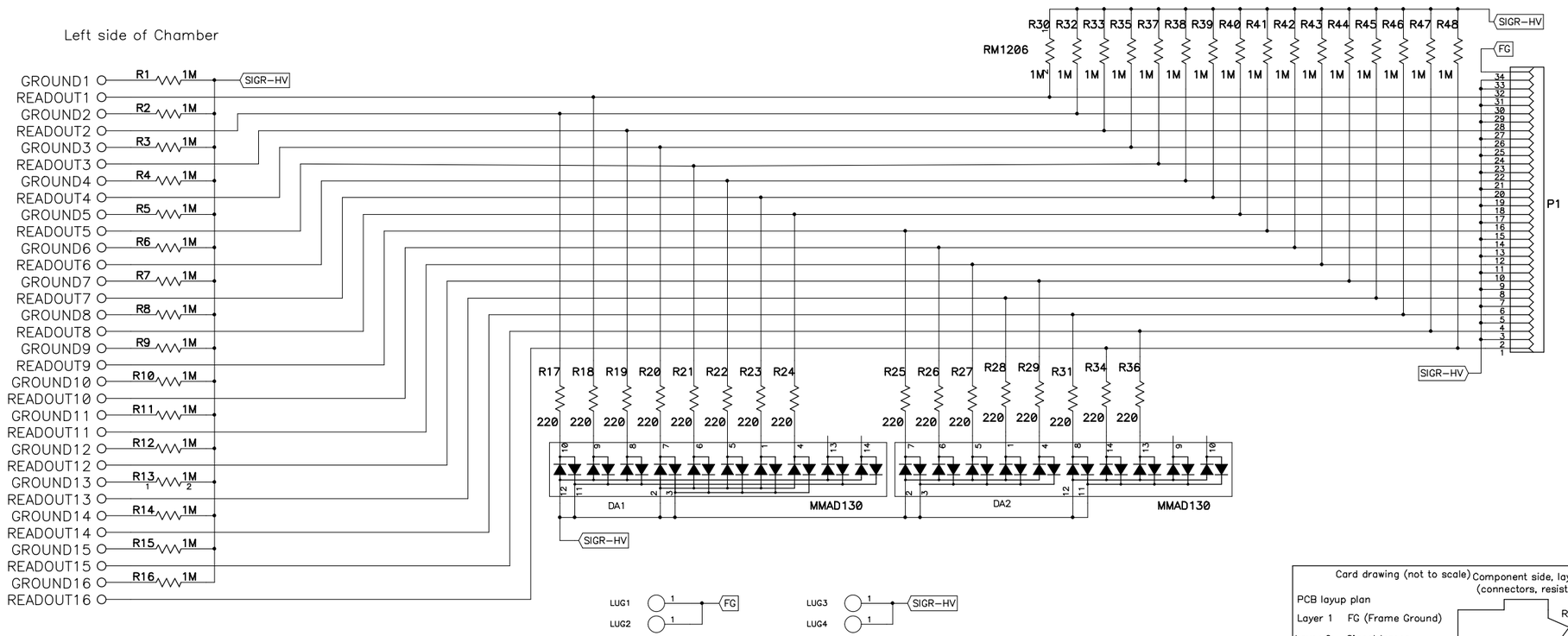

Card drawing (not to scale)

PCB layup plan

Layer 1	FG (Frame Ground)
Layer 2	Signal traces
Layer 3	SIGR-HV (plane)
Layer 4	FG (Frame Ground)

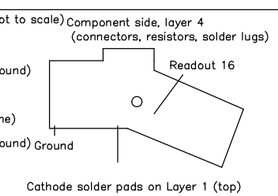

Los Alamos National Laboratory	
Title: Station 2 North Front Left Cathode Card	
Size	Date Originated: 8 March 2000
	Last Revised: 20 Sept 2000
LANL DWG #:	Approved By: W. Sondheim
PHENIX #: 002-0212-215	Drawn by: G. Hart
Filename: 002-0212-215.sch	Sheet of

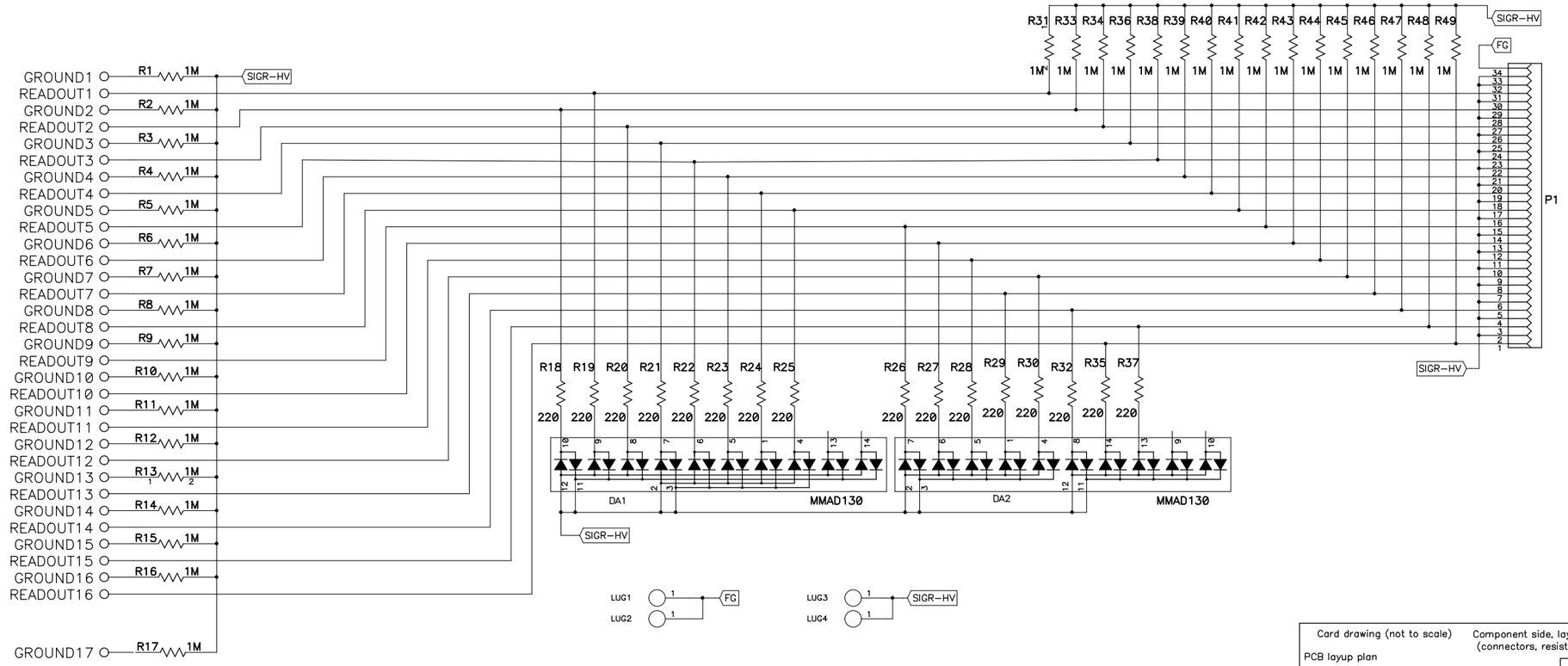

Card drawing (not to scale)

PCB layup plan

Layer 1	FG (Frame Ground)
Layer 2	Signal traces
Layer 3	SIGR-HV (plane)
Layer 4	FG (Frame Ground)

Component side, layer 4
(connectors, resistors, solder lugs)

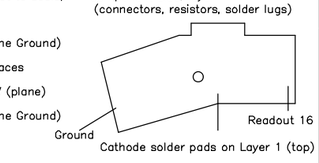

Los Alamos National Laboratory	
Title: Station 2 North Rear Right Cathode Card	
SCHEMATIC	
Size	Date Originated: 8 March 2000
	Last Revised: 18 Sept 2000
LANL DWG #:	Approved By: W. Sondheim
PHENIX #: 002-0212-216	Drawn by: G. Hart
Filename: 002-0212-216.sch	Sheet of

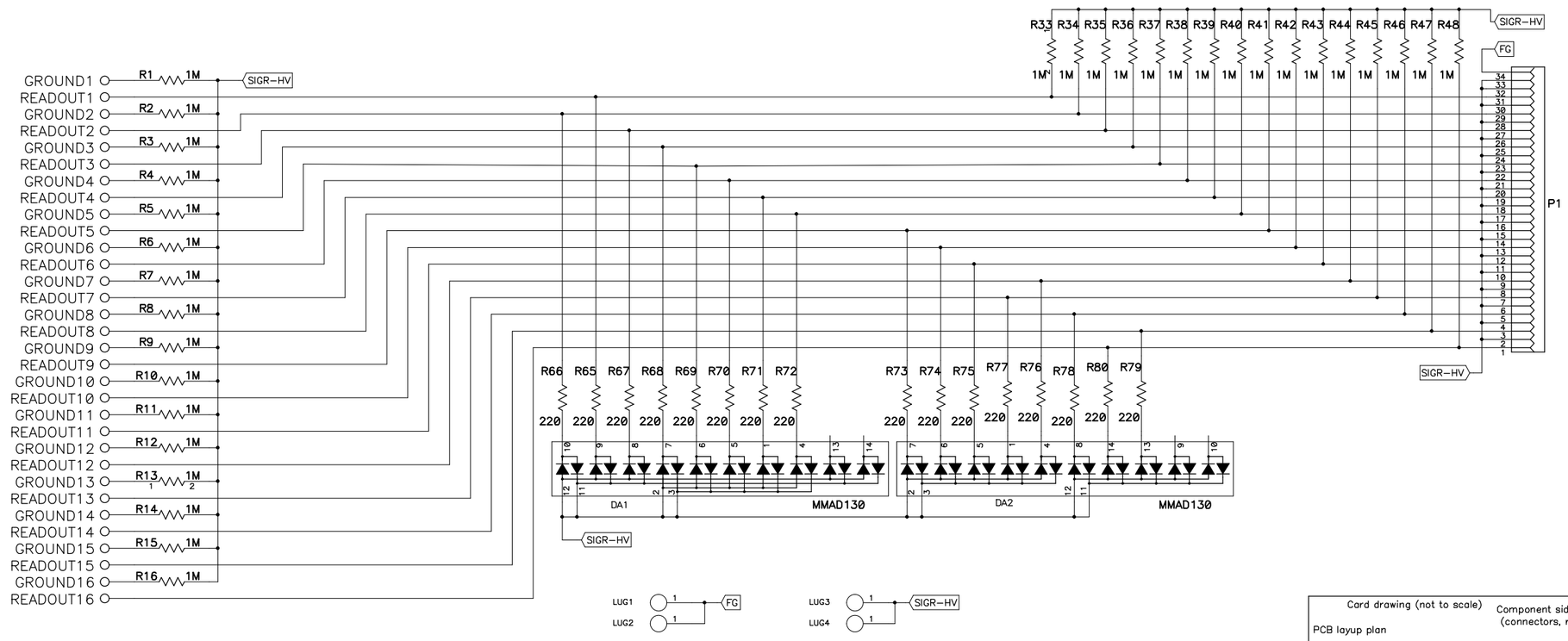

Card drawing (not to scale)

PCB layup plan

Layer 1	FG (Frame Ground)
Layer 2	Signal traces
Layer 3	SIGR–HV (plane)
Layer 4	FG (Frame Ground)

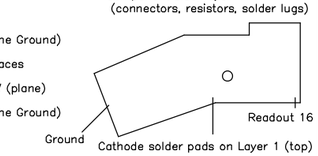

Los Alamos National Laboratory		
Title: Station 2 North Rear Left Cathode Card		
SCHEMATIC		
Size	Date Originated: 8 March 2000	
	Last Revised: 18 Sept 2000	
LANL DWG #:		Approved By: W. Sondheim
PHENIX #: 002–0212–217		Drawn by: G. Hart
Filename: 002–0212–217.sch		Sheet of

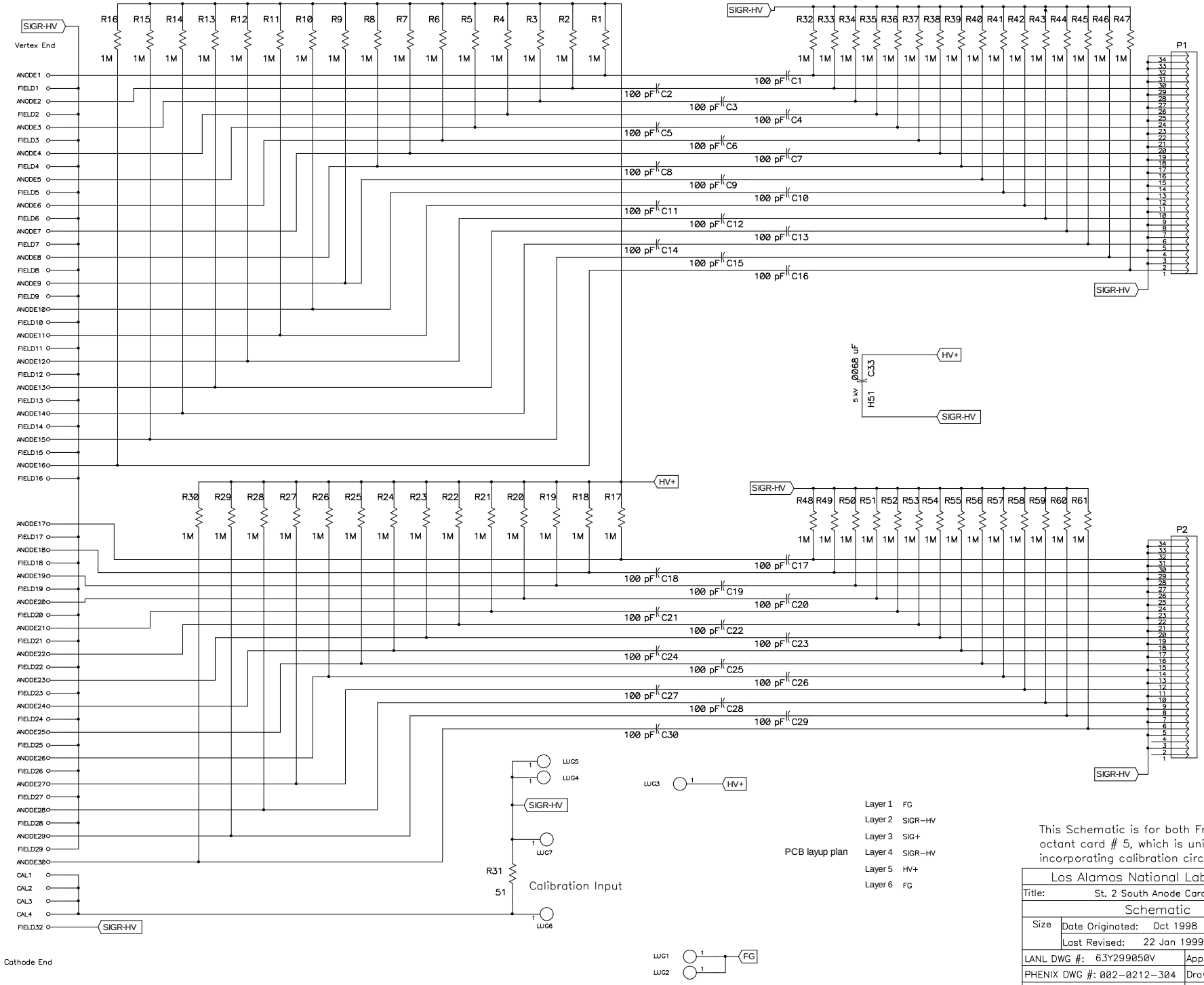

This Schematic is for both Front & Rear octant card # 5, which is unique by incorporating calibration circuitry

Los Alamos National Laboratory		
Title: St. 2 South Anode Card V		
Schematic		
Size	Date Originated: Oct 1998	
	Last Revised: 22 Jan 1999	
LANL DWG #: 63Y299050V		Approved By: W. Sondheim
PHENIX DWG #: 002-0212-304		Drawn by: G Hart
Filename: 299050V.sch		Sheet 17 of 17

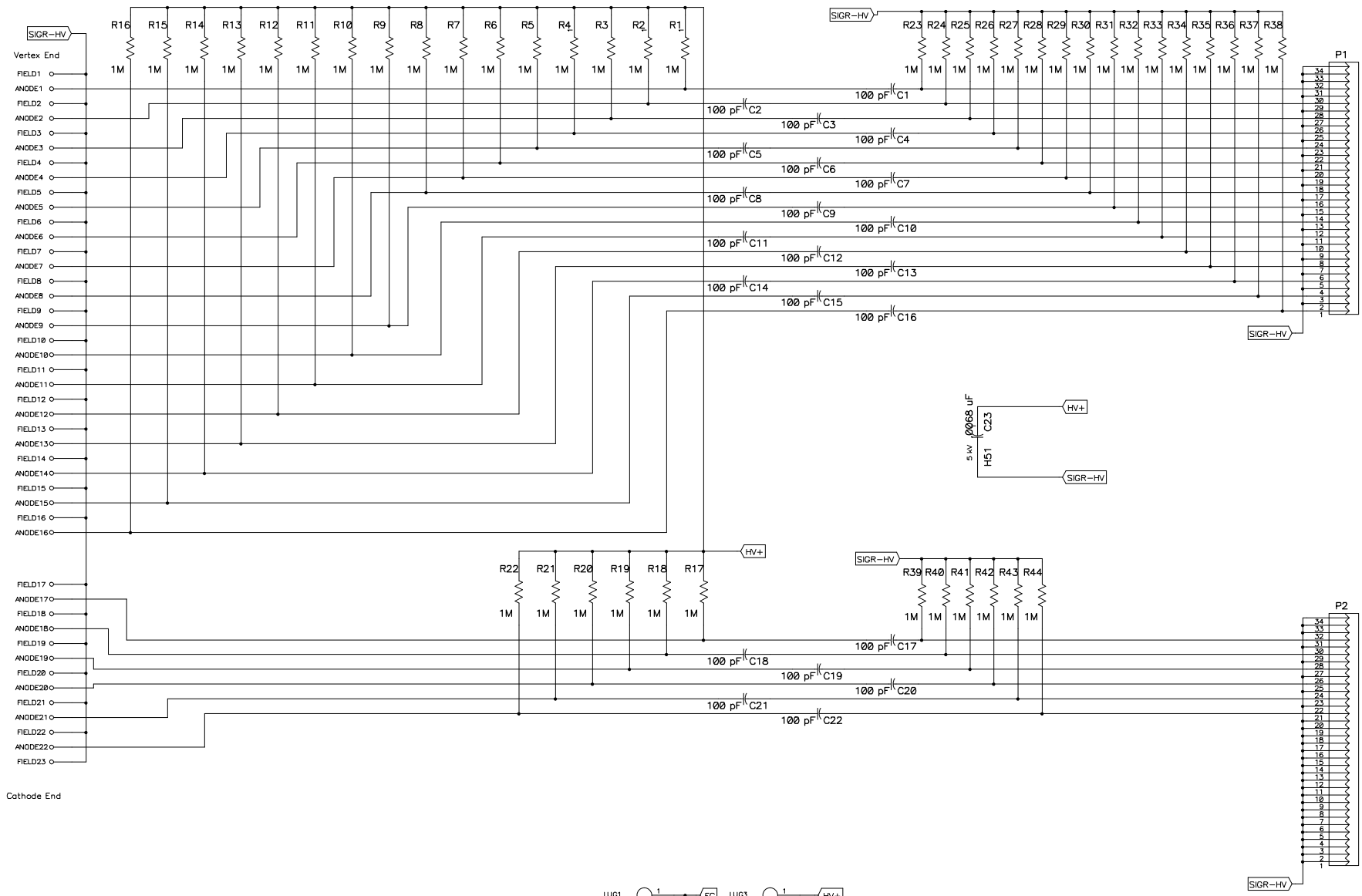

This schematic is for rear octant card 1 only

Los Alamos National Laboratory		
Title: Station 2 South, Anode Card W		
Size	Date Originated: Aug 13, 1998	
	Last Revised: 22 Jan 1999	
LANL DWG #: 63Y299050W		Approved By: W. Sondheim
PHENIX DWG #: 002-0212-300		Drawn by: G. Hart
Filename: 299050w.sch		Sheet 17 of 17

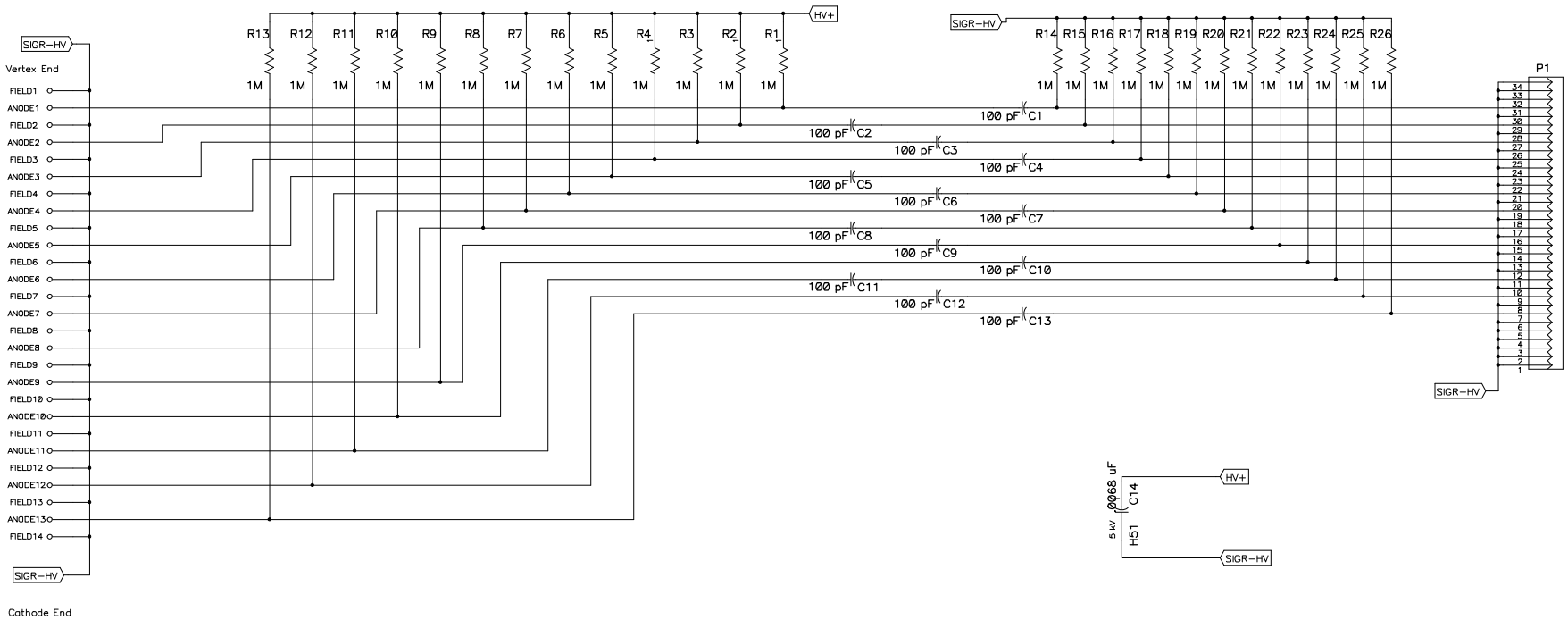

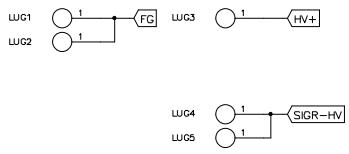

PCB layup plan

Layer 1 FG
Layer 2 SIG-
Layer 3 SIG+
Layer 4 HV-
Layer 5 HV+
Layer 6 FG

This schematic is for front octant card 1 only

Los Alamos National Laboratory		
Title: Station 2 South Anode Card X		
Schematic		
Size	Date Originated: Aug 13, 1998	
	Last Revised: 22 Jan 1999	
LANL DWG #: 63Y299050X		Approved By: W. Sondheim
PHENIX DWG #: 002-0212-301		Drawn by: G. Hart
Filename: 299050X.sch		Sheet 17 of 17

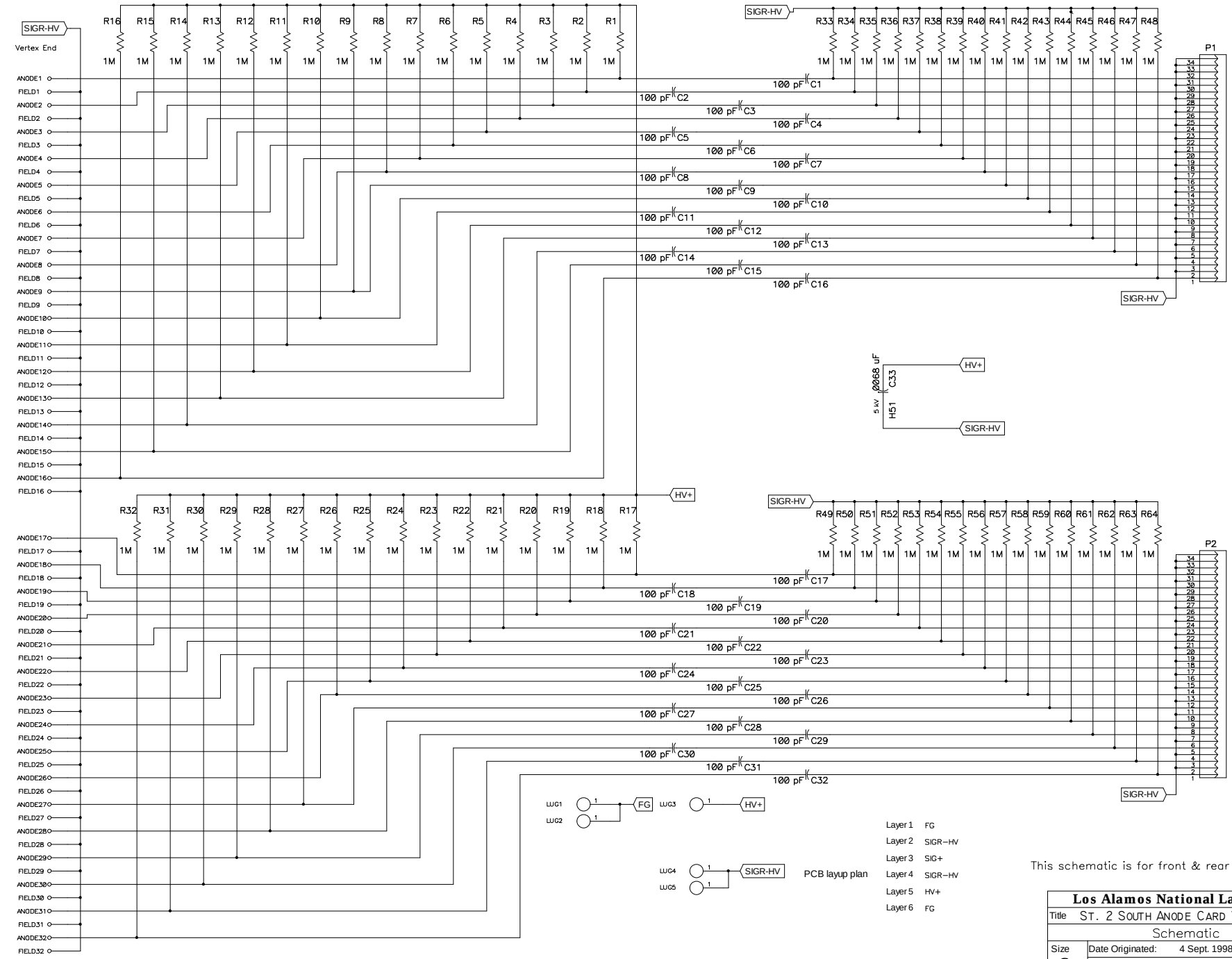

PCB layup plan

Layer 1	FG
Layer 2	SIGR–HV
Layer 3	SIG+
Layer 4	SIGR–HV
Layer 5	HV+
Layer 6	FG

This schematic is for front & rear octant cards 2–4

Los Alamos National Laboratory		
Title ST. 2 SOUTH ANODE CARD Y & Z		
Schematic		
Size **C**	Date Originated: 4 Sept. 1998	
	Date Last Revised: 22 Jan 1999	
LANL DWG #: 63Y299050Y		Approved By: W. Sondheim
PHENIX DWG #: 002-0212-302/303		Drawn by G Hart
Filename: 299050Y.sch		Sheet 17 of 17

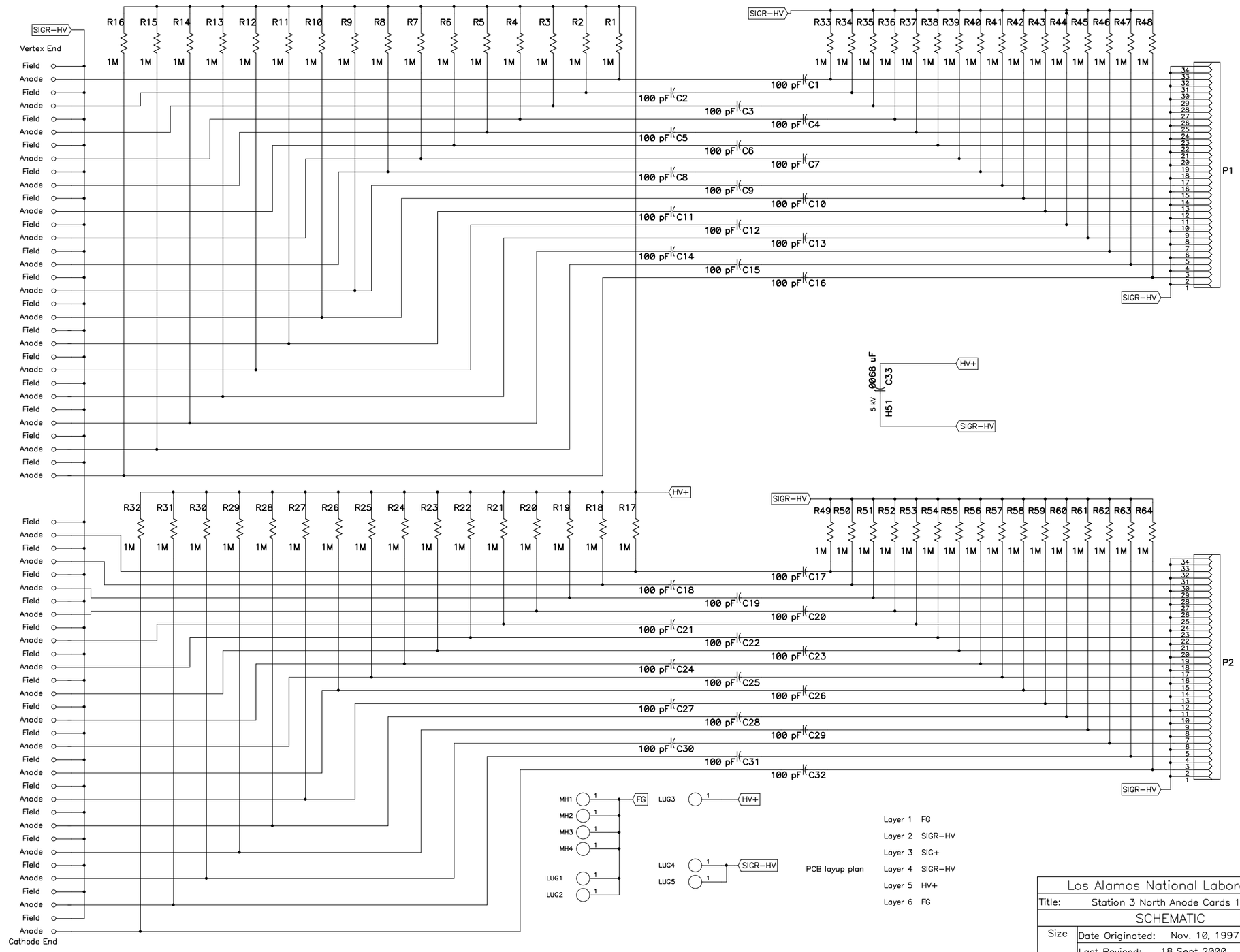

Los Alamos National Laboratory	
Title: Station 3 North Anode Cards 1–9	
SCHEMATIC	
Size	Date Originated: Nov. 10, 1997
	Last Revised: 18 Sept 2000
LANL DWG #:	Approved By: W. Sondheim
PHENIX #: 002–0212–500	Drawn by: G. Hart
Filename: 002–0212–500.sch	Sheet of

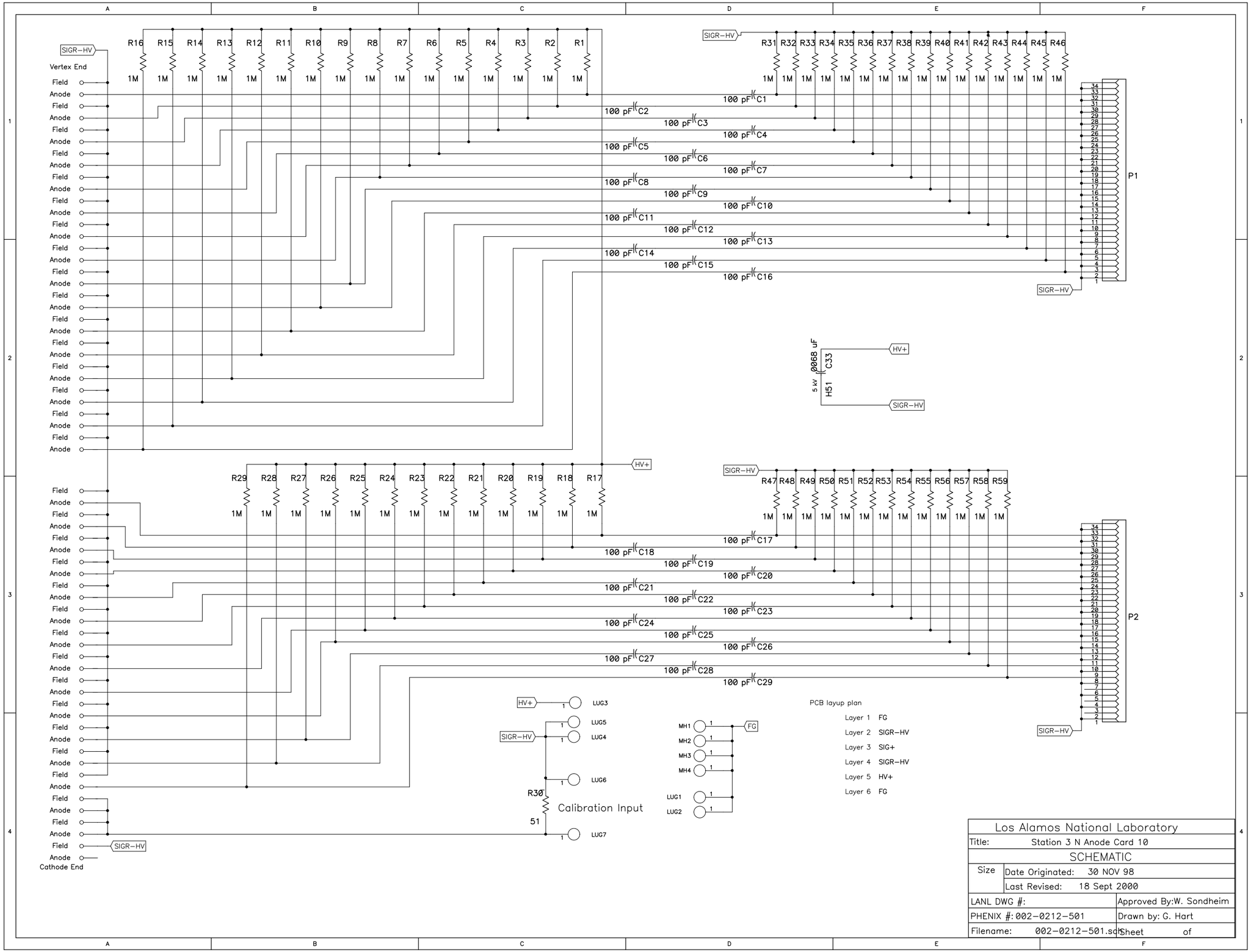
SIGR–HV
Vertex End
Field
Anode
Cathode End
R1 R2 R3 R4 R5 R6 R7 R8 R9 R10 R11 R12 R13 R14 R15 R16
R17 R18 R19 R20 R21 R22 R23 R24 R25 R26 R27 R28 R29
R30
51
1M
100 pF C1 C2 C3 C4 C5 C6 C7 C8 C9 C10 C11 C12 C13 C14 C15 C16
C17 C18 C19 C20 C21 C22 C23 C24 C25 C26 C27 C28 C29
R31 R32 R33 R34 R35 R36 R37 R38 R39 R40 R41 R42 R43 R44 R45 R46
R47 R48 R49 R50 R51 R52 R53 R54 R55 R56 R57 R58 R59
P1
P2
HV+
H51
5 kV
.0068 uF
C33
LUG1 LUG2 LUG3 LUG4 LUG5 LUG6 LUG7
MH1 MH2 MH3 MH4
FG
Calibration Input
PCB layup plan
Layer 1 FG
Layer 2 SIGR–HV
Layer 3 SIG+
Layer 4 SIGR–HV
Layer 5 HV+
Layer 6 FG
Los Alamos National Laboratory
Title: Station 3 N Anode Card 10
SCHEMATIC
Size
Date Originated: 30 NOV 98
Last Revised: 18 Sept 2000
LANL DWG #:
Approved By:W. Sondheim
PHENIX #:002–0212–501
Drawn by: G. Hart
Filename: 002–0212–501.sch
Sheet of

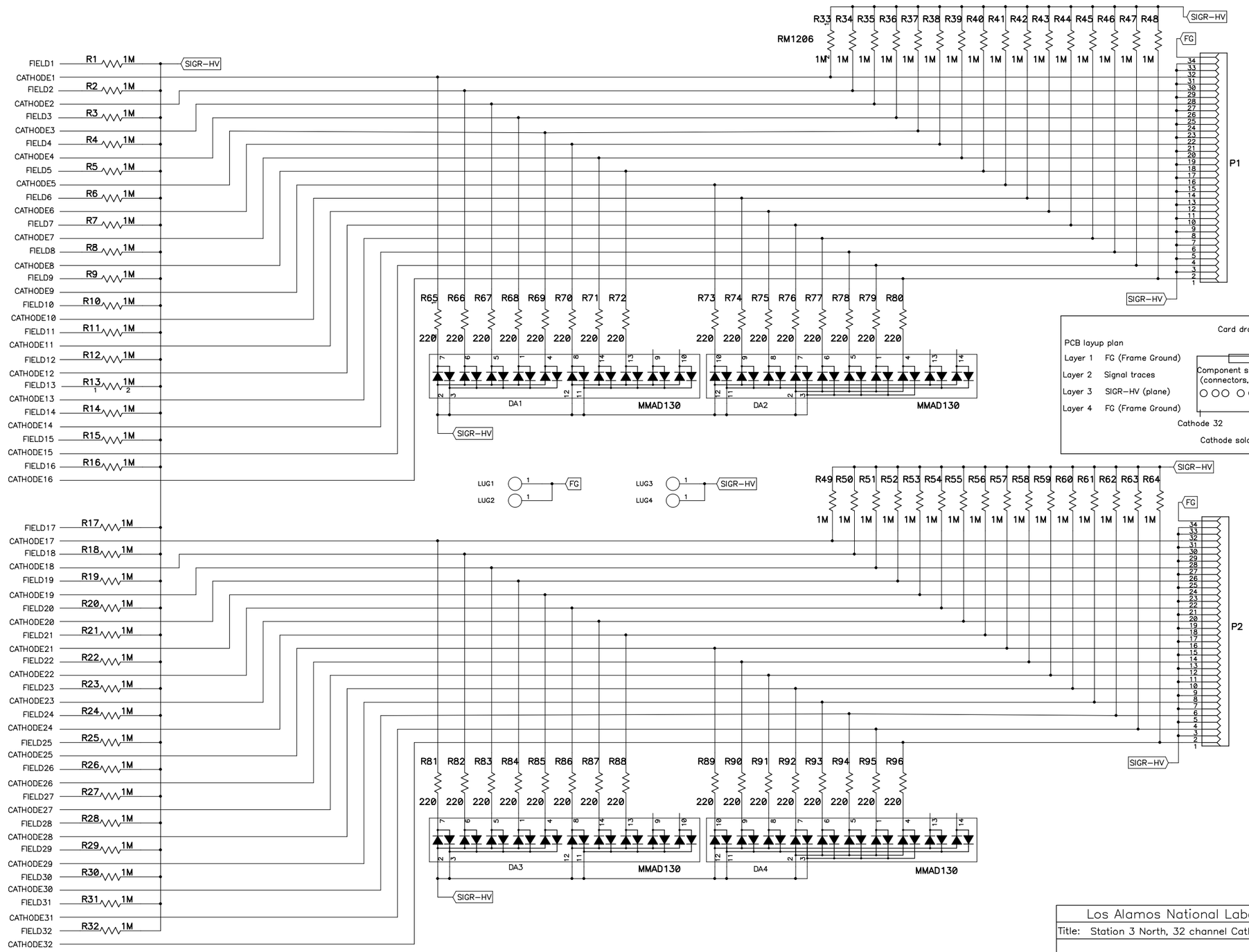

Los Alamos National Laboratory

Title: Station 3 North, 32 channel Cathode Card		
Size	Date Originated: Feb 18, 1998	
	Last Revised: 20 Sept 2000	
LANL DWG #:		Approved By: W. Sondheim
PHENIX #: 002-0212-507		Drawn by: G Hart
Filename: 002-0212-507.sch		Sheet of

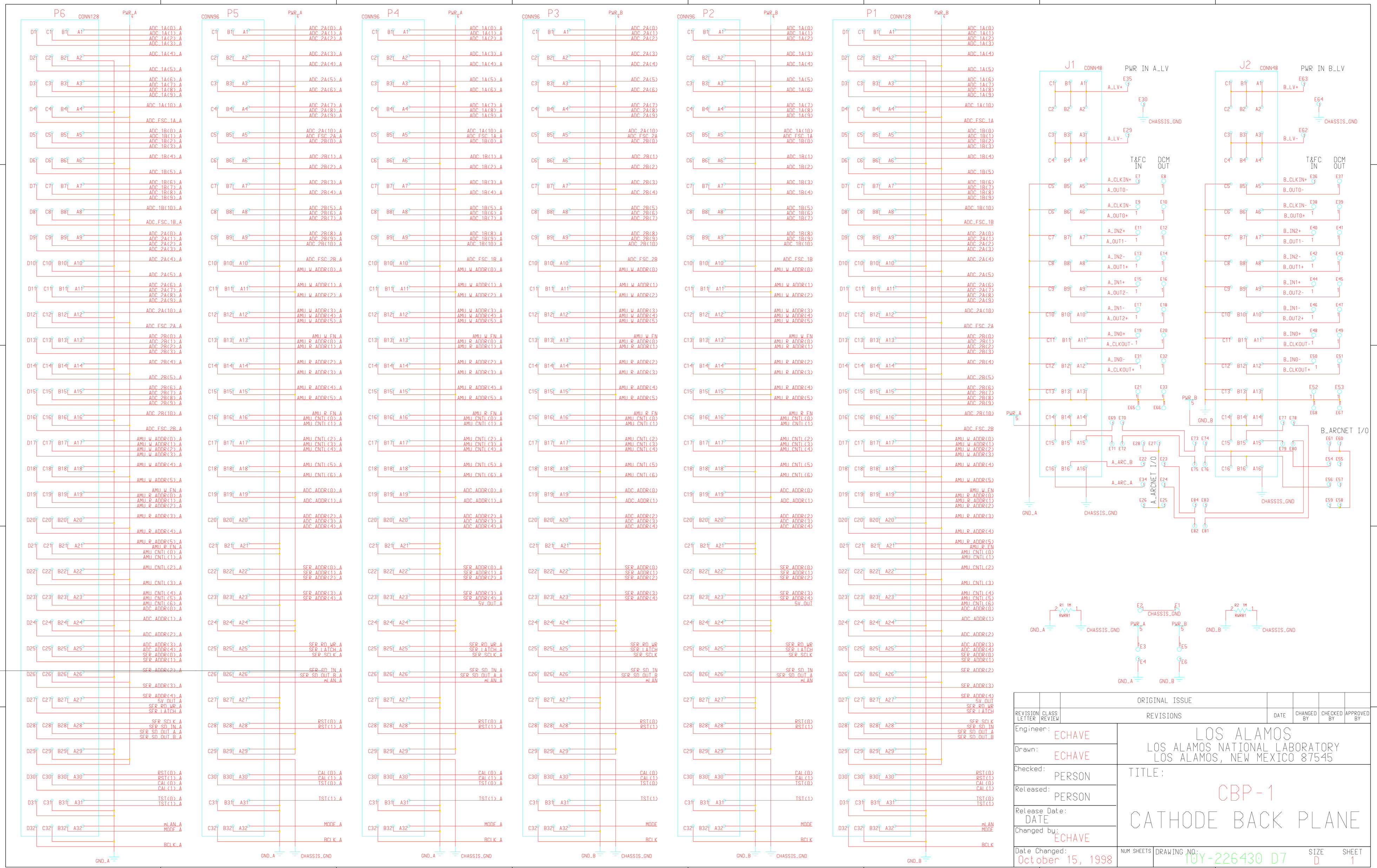

REVISION LETTER	CLASS REVIEW	REVISIONS	DATE	CHANGED BY	CHECKED BY	APPROVED BY
		ORIGINAL ISSUE				

Engineer: ECHAVE
Drawn: ECHAVE
Checked: PERSON
Released: PERSON
Release Date: DATE
Changed by: ECHAVE
Date Changed: October 15, 1998

LOS ALAMOS
LOS ALAMOS NATIONAL LABORATORY
LOS ALAMOS, NEW MEXICO 87545

TITLE:
CBP-1
CATHODE BACK PLANE

NUM SHEETS | DRAWING NO: 10Y-226430 D7 | SIZE D | SHEET 1

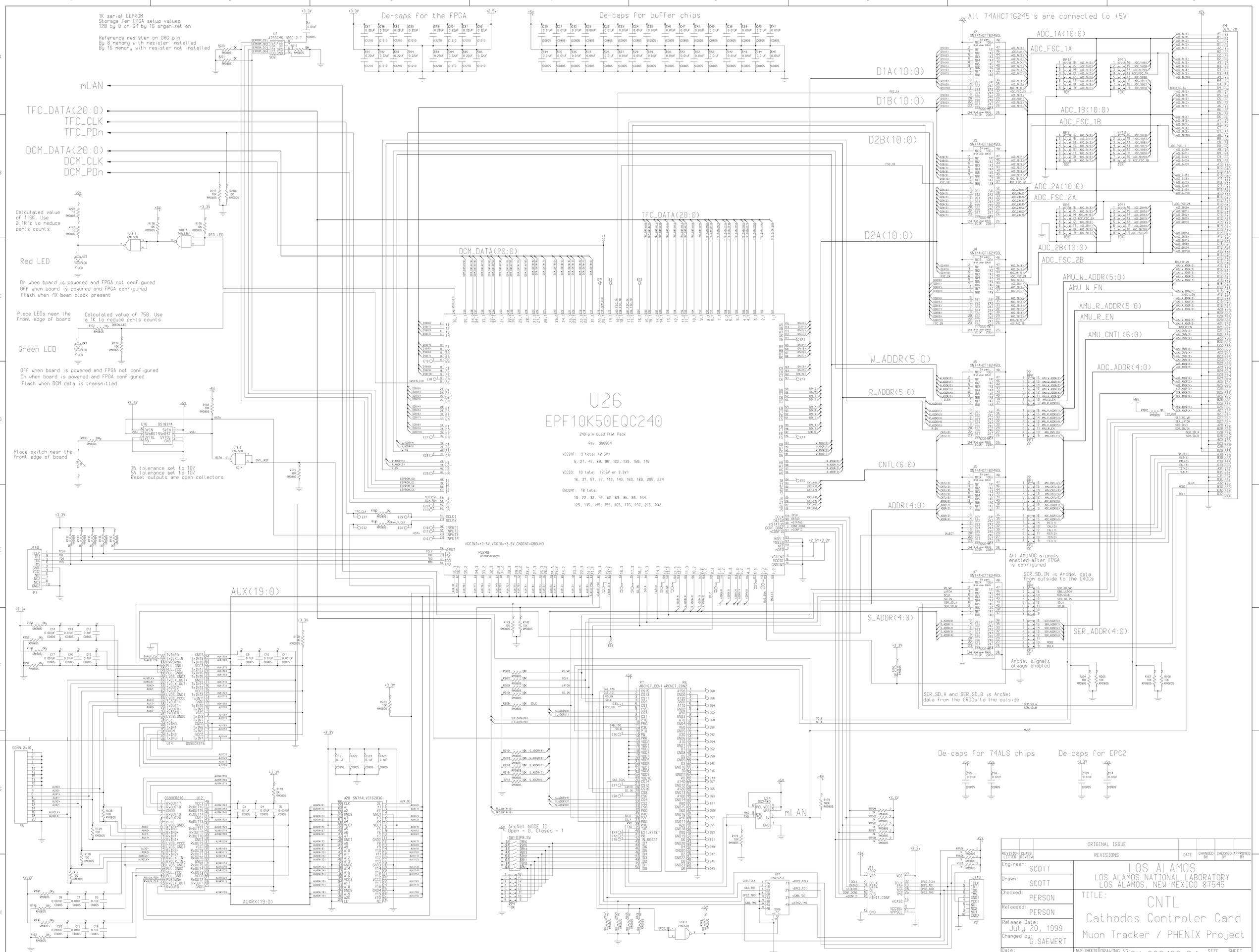
1K serial EEPROM
Storage for FPGA setup values.
128 by 8 or 64 by 16 organization
Reference resister on ORG pin
By 8 memory with resister installed
By 16 memory with resister not installed
De-caps for the FPGA
De-caps for buffer chips
All 74AHCT16245's are connected to +5V
mLAN
TFC_DATA(20:0)
TFC_CLK
TFC_PDn
DCM_DATA(20:0)
DCM_CLK
DCM_PDn
Calculated value of 1.6K. Use 2 1K's to reduce parts counts.
Red LED
On when board is powered and FPGA not configured
Off when board is powered and FPGA configured
Flash when 4X beam clock present
Place LEDs near the front edge of board
Calculated value of 750. Use a 1K to reduce parts counts.
Green LED
Off when board is powered and FPGA not configured
On when board is powered and FPGA configured
Flash when DCM data is transmitted
Place switch near the front edge of board
3V tolerance set to 10/
5V tolerance set to 10/
Reset outputs are open collectors
U26
EPF10K50EQC240
240-pin Quad Flat Pack
Rev. 980804
VCCINT: 9 total (2.5V)
5, 27, 47, 89, 96, 122, 130, 150, 170
VCCIO: 10 total (2.5V or 3.3V)
16, 37, 57, 77, 112, 140, 160, 189, 205, 224
GNDINT: 18 total
10, 22, 32, 42, 52, 69, 85, 93, 104,
125, 135, 145, 155, 165, 176, 197, 216, 232.
VCCINT=+2.5V,VCCIO=+3.3V,GNDINT=GROUND
AUX(19:0)
AUXRX(19:0)
D1A(10:0)
D1B(10:0)
D2B(10:0)
D2A(10:0)
W_ADDR(5:0)
R_ADDR(5:0)
CNTL(6:0)
ADDR(4:0)
S_ADDR(4:0)
SER_ADDR(4:0)
ADC_1A(10:0)
ADC_FSC_1A
ADC_1B(10:0)
ADC_FSC_1B
ADC_2A(10:0)
ADC_FSC_2A
ADC_2B(10:0)
ADC_FSC_2B
AMU_W_ADDR(5:0)
AMU_W_EN
AMU_R_ADDR(5:0)
AMU_R_EN
AMU_CNTL(6:0)
ADC_ADDR(4:0)
All AMUADC signals enabled after FPGA is configured
SER_SD_IN is ArcNet data from outside to the CROCs
ArcNet signals always enabled
SER_SD_A and SER_SD_B is ArcNet data from the CROCs to the outside
ArcNet NODE ID
Open = 0, Closed = 1
De-caps for 74ALS chips
De-caps for EPC2
ORIGINAL ISSUE
REVISION LETTER
CLASS REVIEW
REVISIONS
DATE
CHANGED BY
CHECKED BY
APPROVED BY
Engineer: SCOTT
Drawn: SCOTT
Checked: PERSON
Released: PERSON
Release Date: July 20, 1999
Changed by: G.SAEWERT
Date: 1-11-00
LOS ALAMOS
LOS ALAMOS NATIONAL LABORATORY
LOS ALAMOS, NEW MEXICO 87545
TITLE:
CNTL
Cathodes Controler Card
Muon Tracker / PHENIX Project
NUM SHEETS
DRAWING NO. 10Y-226430 D4
SIZE E
SHEET 1 of 2

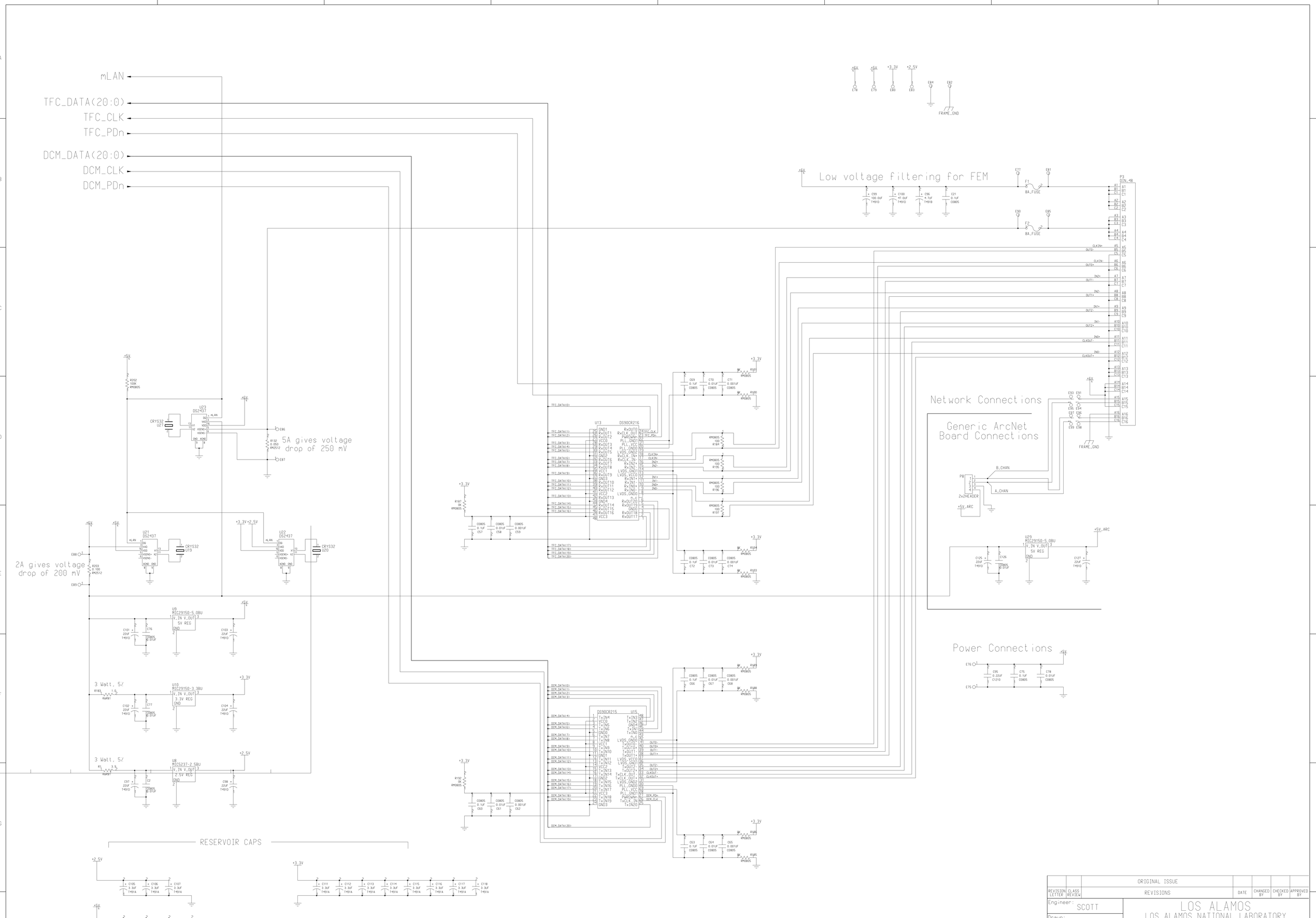

REVISION LETTER	CLASS REVIEW	ORIGINAL ISSUE / REVISIONS	DATE	CHANGED BY	CHECKED BY	APPROVED BY

Engineer: SCOTT
Drawn: SCOTT
Checked: PERSON
Released: PERSON
Release Date: July 5, 1999
Changed by: PERSON
Date: DATE

LOS ALAMOS
LOS ALAMOS NATIONAL LABORATORY
LOS ALAMOS, NEW MEXICO 87545

TITLE:
cntl
Cathodes Controler Card
Muon Tracker / PHENIX Project

NUM SHEETS | DRAWING NO: | SIZE E | SHEET 2 of 2

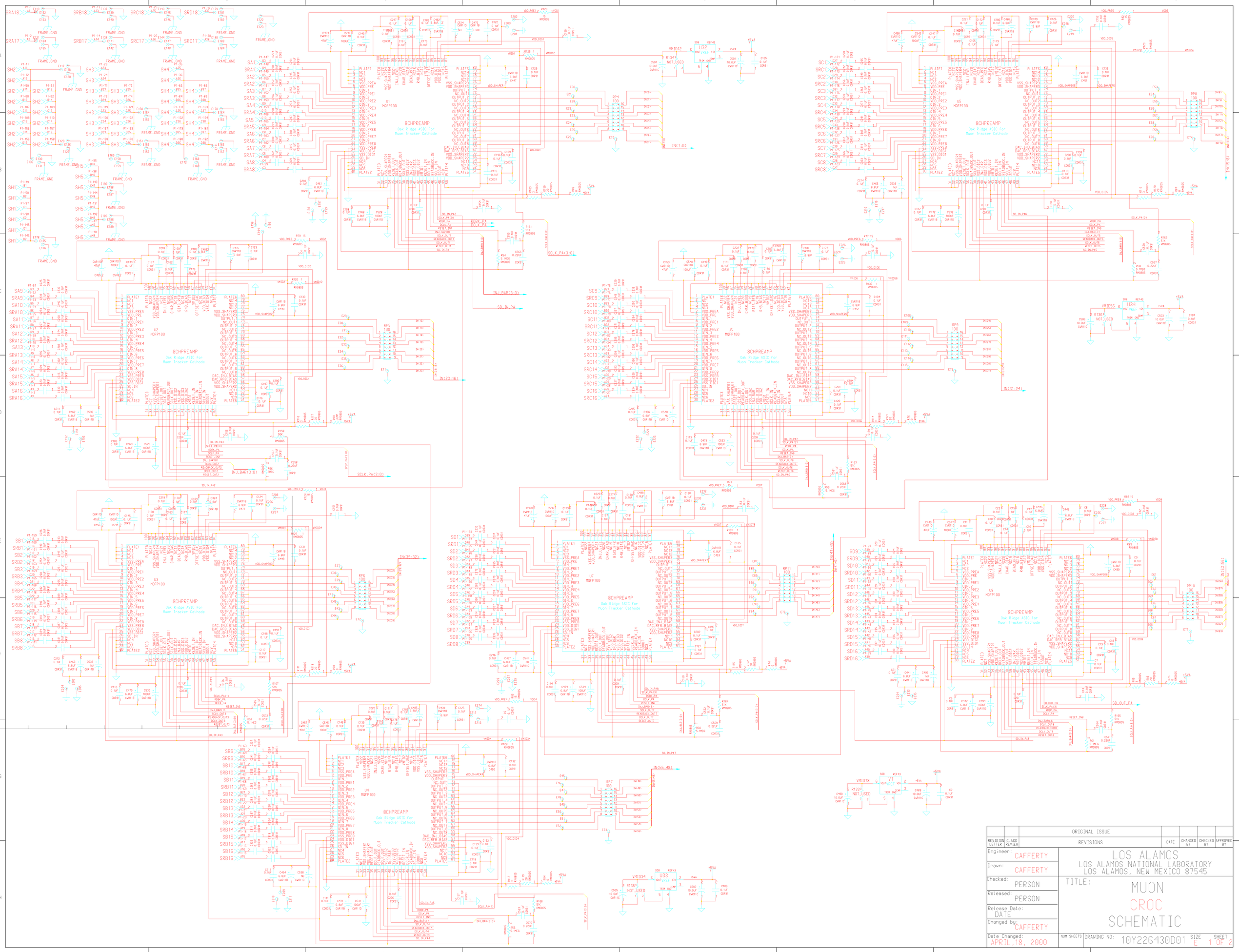

		ORIGINAL ISSUE				
REVISION LETTER	CLASS. REVIEW	REVISIONS	DATE	CHANGED BY	CHECKED BY	APPROVED BY

Engineer: CAFFERTY
Drawn: CAFFERTY
Checked: PERSON
Released: PERSON
Release Date: DATE
Changed by: CAFFERTY
Date Changed: APRIL,18, 2000

LOS ALAMOS
LOS ALAMOS NATIONAL LABORATORY
LOS ALAMOS, NEW MEXICO 87545

TITLE: MUON CROC SCHEMATIC

NUM SHEETS | DRAWING NO: 10Y226430D01 | SIZE E | SHEET 1 OF 2

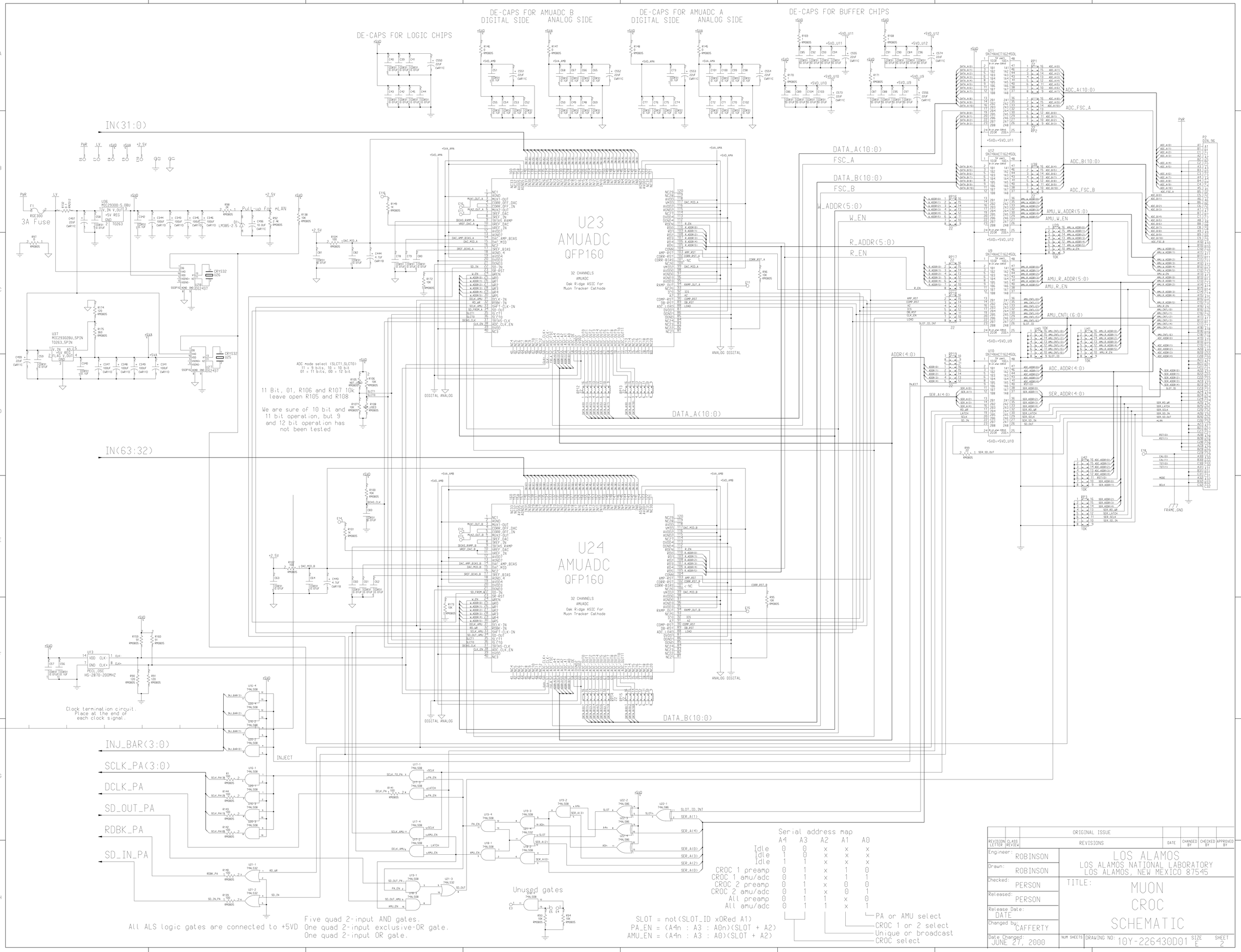
DE-CAPS FOR LOGIC CHIPS
DE-CAPS FOR AMUADC B
DIGITAL SIDE
ANALOG SIDE
DE-CAPS FOR AMUADC A
DIGITAL SIDE
ANALOG SIDE
DE-CAPS FOR BUFFER CHIPS
IN(31:0)
IN(63:32)
U23
AMUADC
QFP160
32 CHANNELS
AMUADC
Oak Ridge ASIC for
Muon Tracker Cathode
U24
AMUADC
QFP160
32 CHANNELS
AMUADC
Oak Ridge ASIC for
Muon Tracker Cathode
DATA_A(10:0)
FSC_A
DATA_B(10:0)
FSC_B
W_ADDR(5:0)
W_EN
R_ADDR(5:0)
R_EN
ADDR(4:0)
SER_A(4:0)
ADC_A(10:0)
ADC_FSC_A
ADC_B(10:0)
ADC_FSC_B
AMU_W_ADDR(5:0)
AMU_W_EN
AMU_R_ADDR(5:0)
AMU_R_EN
AMU_CNTL(6:0)
ADC_ADDR(4:0)
SER_ADDR(4:0)
DATA_B(10:0)
INJ_BAR(3:0)
SCLK_PA(3:0)
DCLK_PA
SD_OUT_PA
RDBK_PA
SD_IN_PA
INJECT
DIGITAL ANALOG
ANALOG DIGITAL
FRAME_GND
PWR
LV
+5VD
+5VA
+2.5V
3A Fuse
Pull-up for mLAN
Clock termination circuit.
Place at the end of
each clock signal.
PECL_OSC
HS-2870-20GMHZ
ADC mode select (SLCT1,SLCT0)
11 = 9 bits, 10 = 10 bit
01 = 11 bits, 00 = 12 bit
11 Bit, 01, R106 and R107 10k
leave open R105 and R108
We are sure of 10 bit and
11 bit operation, but 9
and 12 bit operation has
not been tested
Unused gates
All ALS logic gates are connected to +5VD
Five quad 2-input AND gates.
One quad 2-input exclusive-OR gate.
One quad 2-input OR gate.
Serial address map
A4 A3 A2 A1 A0
Idle 0 0 x x x
Idle 1 0 x x x
Idle 1 1 x x x
CROC 1 preamp 0 1 x 1 0
CROC 1 amu/adc 0 1 x 1 1
CROC 2 preamp 0 1 x 0 0
CROC 2 amu/adc 0 1 x 0 1
All preamp 0 1 1 x 0
All amu/adc 0 1 1 x 1
PA or AMU select
CROC 1 or 2 select
Unique or broadcast
CROC select
SLOT = not(SLOT_ID x0Red A1)
PA_EN = (A4n : A3 : A0n)(SLOT + A2)
AMU_EN = (A4n : A3 : A0)(SLOT + A2)
ORIGINAL ISSUE
REVISION LETTER
CLASS REVIEW
REVISIONS
DATE
CHANGED BY
CHECKED BY
APPROVED BY
Engineer: ROBINSON
Drawn: ROBINSON
Checked: PERSON
Released: PERSON
Release Date: DATE
Changed by: CAFFERTY
Date Changed: JUNE 27, 2000
LOS ALAMOS
LOS ALAMOS NATIONAL LABORATORY
LOS ALAMOS, NEW MEXICO 87545
TITLE:
MUON
CROC
SCHEMATIC
NUM SHEETS
DRAWING NO: 10Y-226430D01
SIZE E
SHEET 2

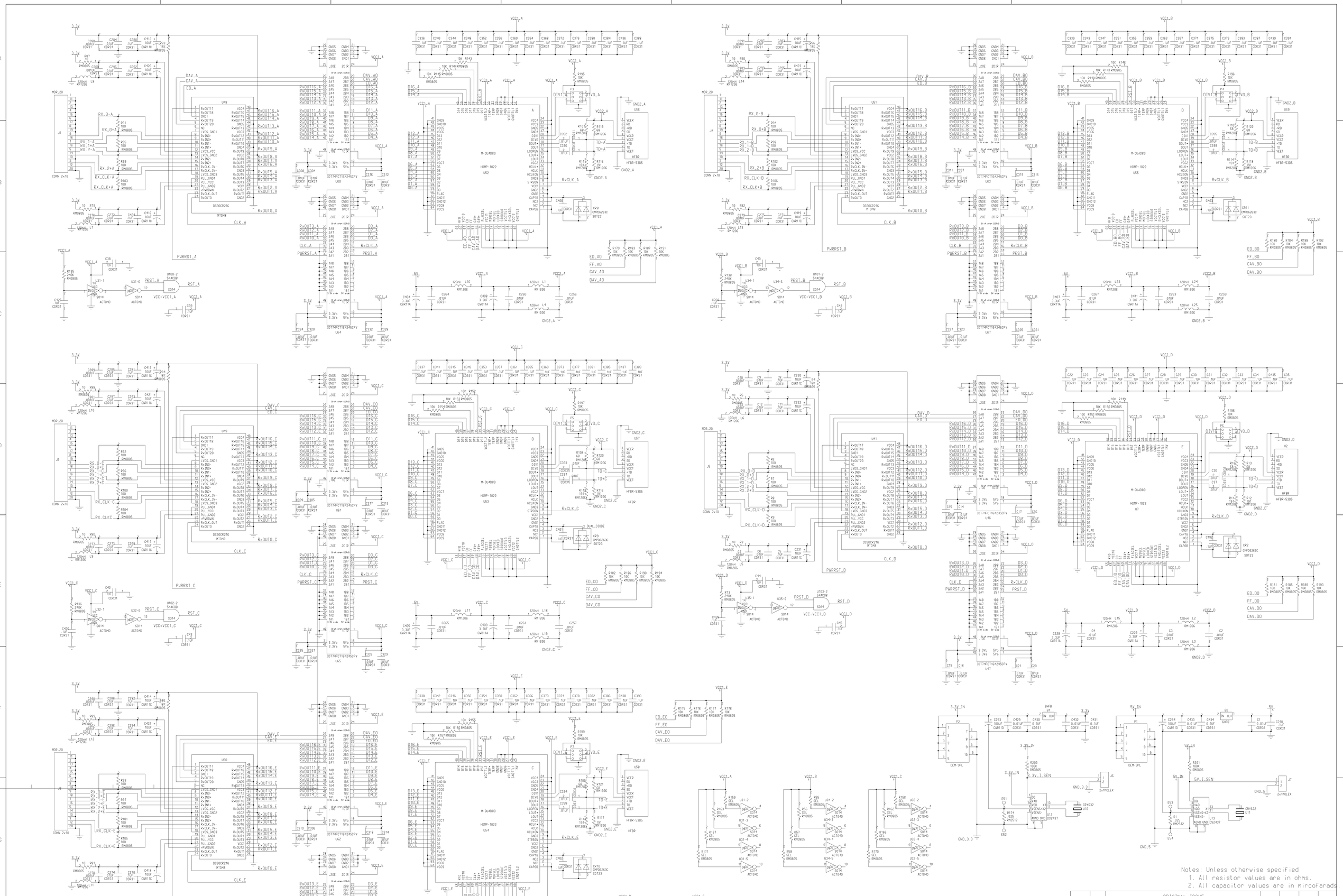

Notes: Unless otherwise specified
1. All resistor values are in ohms.
2. All capacitor values are in mircofarads.

REVISION LETTER	CLASS REVIEW	REVISIONS	DATE	CHANGED BY	CHECKED BY	APPROVED BY
		ORIGINAL ISSUE				

Engineer: M. ECHAVE
Drawn: M. ECHAVE
Checked: M. ECHAVE
Released: ECHAVE/SAEWERT
Release Date: DATE
Changed by: GARY SAEWERT
Date Changed: JULY 18, 2000

LOS ALAMOS
LOS ALAMOS NATIONAL LABORATORY
LOS ALAMOS, NEW MEXICO 87545

TITLE:
CLINK_RX
SCHEMATIC

NUM SHEETS 1 | DRAWING NO. 10Y-226430 | SIZE D10 E | SHEET 1

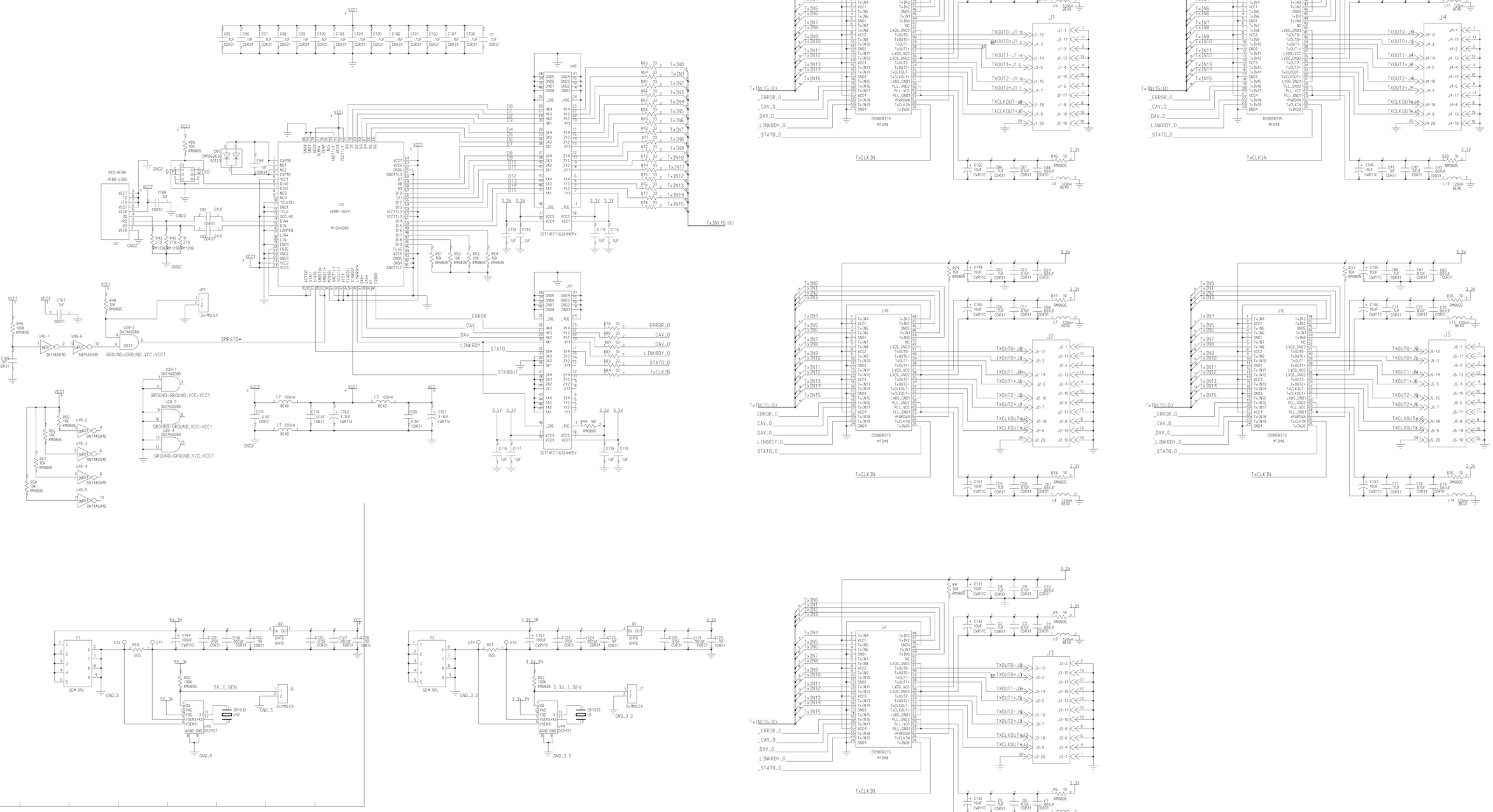

Notes: Unless otherwise specified

1. All resistor values are in ohms.
2. All capacitor values are in mircofarads.

REVISION LETTER	CLASS REVIEW	REVISIONS	DATE	CHANGED BY	CHECKED BY	APPROVED BY
		ORIGINAL ISSUE				

Engineer: M. ECHAVE
Drawn: M. ECHAVE
Checked: M. ECHAVE
Released: ECHAVE/SAEWERT
Release Date: DATE
Changed by: GARY SAEWERT
Date Changed: JULY 18, 2000

LOS ALAMOS
LOS ALAMOS NATIONAL LABORATORY
LOS ALAMOS, NEW MEXICO 87545

TITLE:
CLINK_TX
SCHEMATIC

NUM SHEETS 1 | DRAWING NO. 10Y-226430 D13 | SIZE D | SHEET 1

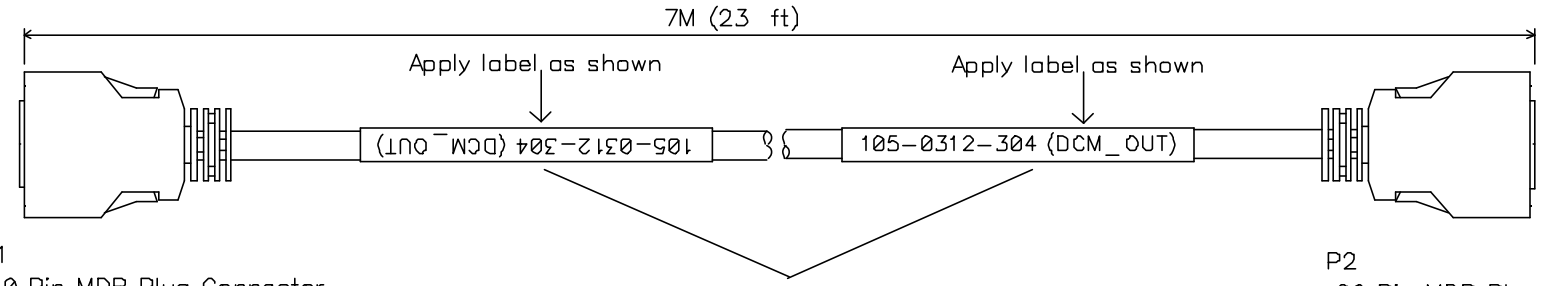

P1
20 Pin MDR Plug Connector
with strain relief shell

Serial Number and date on other side of labels

P2
20 Pin MDR Plug Connector
with strain relief shell

Drill strain relief opening as required to fit securely on cable

Assemble metal shells so outer foil is connected

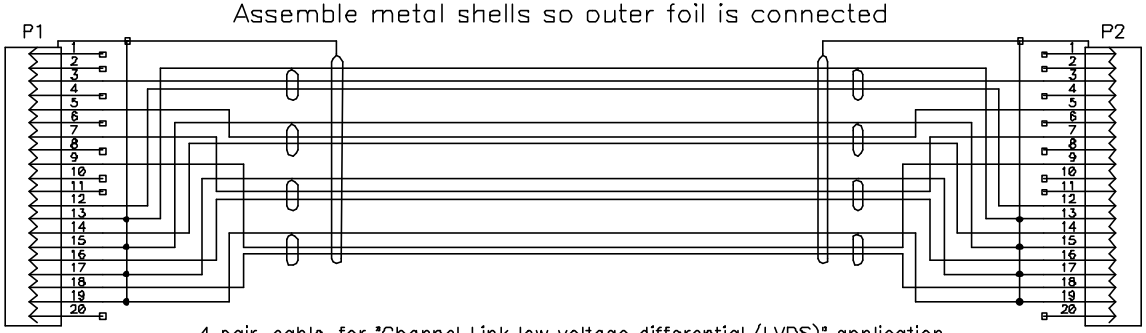

4 pair, cable, for "Channel Link low voltage differential (LVDS)" application
100 ohm impedance
Skew: less than 4 ps /ft within pair, less than 10 ps/ft pair-to-pair
AWG sized to fit connector and have 3.4 dB (or less)/10 M Attenuation @ 231 MHZ

P1 PIN	Wire	P2 PIN
13	SHIELD	13
3	SIGNAL -	3
12	SIGNAL +	12
15	SHIELD	15
5	SIGNAL -	5
14	SIGNAL +	14
17	SHIELD	17
7	SIGNAL -	7
16	SIGNAL +	16
19	SHIELD	19
9	SIGNAL -	9
18	SIGNAL +	18

P1 & P2 3M 10129-3000VE
or equivalent .050 Mini-D-Ribbon (MDR)

Revision Note Table
6 Oct 2000
Updated schematic to indicate that shield wires will be shorted together by metal shell
6 Oct 2000
Add note to enlarge strain relief opening to fit cable as needed
6 Oct 2000
Updated note on Labels to indicate that a Serial Number and Mfgr date to be printed on each label

Los Alamos National Laboratory		
Title	DCM OUT	
	7 Meter CLink Cable	
Size B	Date Originated: 7 July 2000	
	Date Last Revised: 11 Dec 2000	
LANL DWG #	135Y299067	Approved By: R Mischke
PHENIX DWG #:	105-0312-304-DCM	Drawn by: G Hart
Filename	105-0312-304-DCM.pcb	Sheet of 1

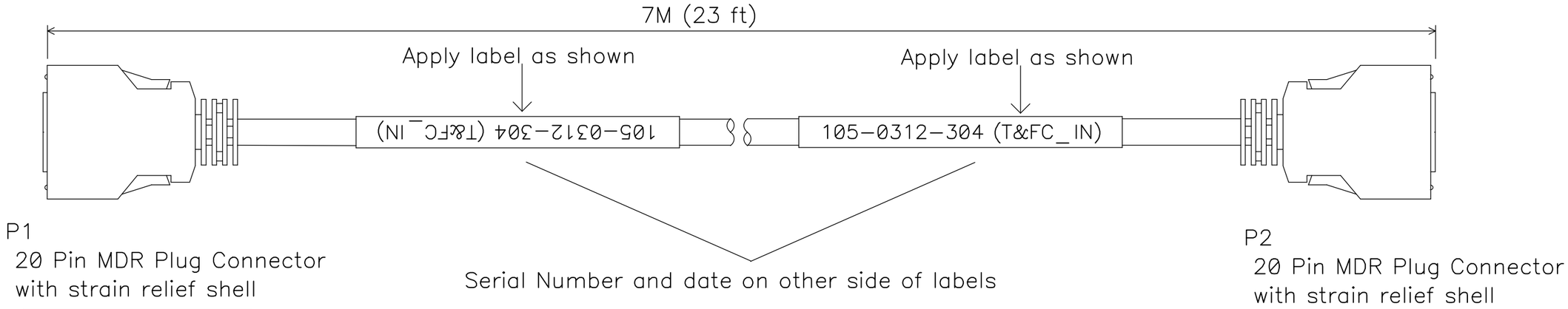

Drill strain relief opening as required to fit securely on cable

Assemble metal shells so outer foil is connected

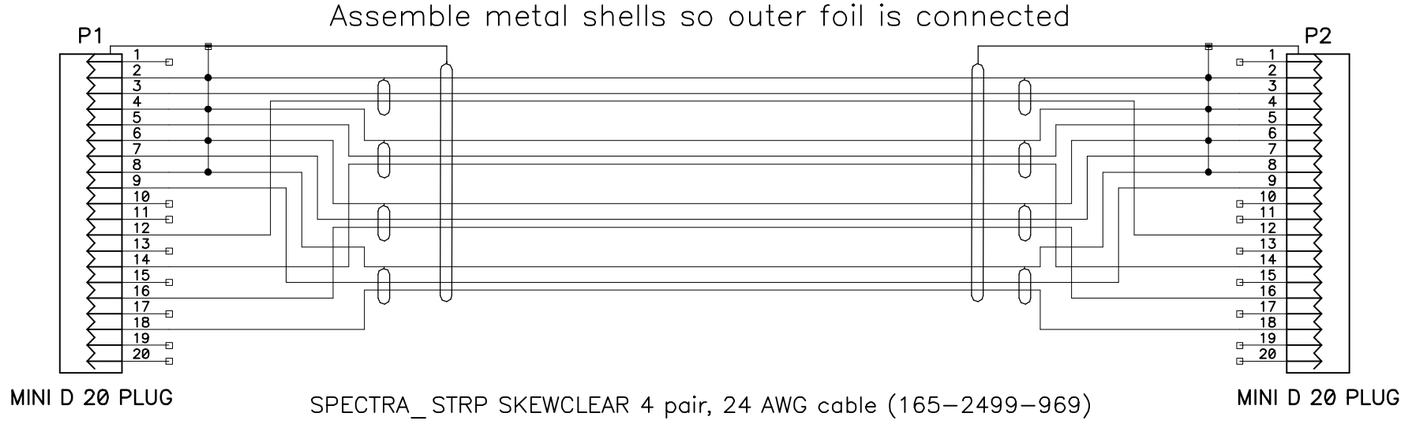

P1 PIN	Wire	P2 PIN
2	SHIELD	2
12	SIGNAL −	12
3	SIGNAL +	3
4	SHIELD	4
14	SIGNAL −	14
5	SIGNAL +	5
6	SHIELD	6
16	SIGNAL −	16
7	SIGNAL +	7
8	SHIELD	8
18	SIGNAL −	18
9	SIGNAL +	9

Revision Note Table

6 Oct 2000
Updated schematic to indicate that shield wires will be shorted

6 Oct 2000
Updated note on Labels to indicate that a Serial Number and Mfgr date to be printed on each label

6 Oct 2000
Add note to enlarge strain releif opening to fit cable as needed

Los Alamos National Laboratory	
Title T&FC IN	
7 METER CLINK CABLE	
Size B	Date Originated: 7 July 2000
	Date Last Revised: 6 Oct 2000
LANL DWG # 135Y299068	Approved By: R. Mischke
PHENIX DWG #:105-0312-304-T&FC	Drawn by: G. Hart
Filename 105-0312-304-T&FC.pcb	Sheet of 1

ITEM	QTY	MANUFACTURER	PART NUMBER	DESCRIPTION
1	1	FUJITSU	FCN-707B034-AU/B	IDC SOCKET CONNECTOR, 34 PIN, (500 CYCLES) 3 PIECES/CONNECTOR
2	7"	BELDEN	8669-250-0	SHIELDING/BONDING CABLE .5" ID (NEWARK 02F4322)
3	.65"	ALPHA WIRE	FIT-350-1/2	KYNAR HEAT SHRINT TUBING, CLEAR, UL STD. 224, 1/2" OD, 2:1 SHRINK RATIO
4	24"	BELDEN	9M28334	ROUND-FLAT CABLE, SHIELDED, 17 PAIRS, 28 AWG, (7 X 36), NEC CL2
5	1	PANDUIT	PLT.7M-C	CABLE TIE, 3.1" LONG, 18LB TENSILE STRENGTH, NYLON
6		BERG / FCI	72477-1221	4 X 12, 2 MM UNSHIELDED CABLE CONNECTOR KIT, .8UM AU PLATING, FOR 28-30 AWG WIRE
6A	1	BERG / FCI	72513-002	TOP COVER PIECE
6B	1	BERG / FCI	72513-001	BOTTOM COVER PIECE
6C	2	BERG / FCI	72394-122	DUAL ROW IDC SOCKET
6D	1	BERG / FCI	72389-001	EJECTOR TAB
7	14	ALPHA WIRE	299/2	WIRE, BUS BAR, BARE, 28 AWG, 1.6" LONG
8	1	AMP	35247	RING TERMINAL, FOR 8 AWG, 1/4" STUD SIZE, NON-INSULATED

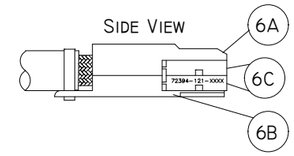

CABLE LABEL
(APPLY TO CABLE MIDWAY BETWEEN CONNECTORS)

SERIAL NUMBERS(XXX)
TO BE SEQUENTIAL STARTING
FROM 001

CATHODE PCB TO FEE
SIGNAL CABLE FOR ST. 2
(REVERSED PI)
JULY 2000 SN XXX
PHENIX 105-0312-305B

1-1/8"

3"

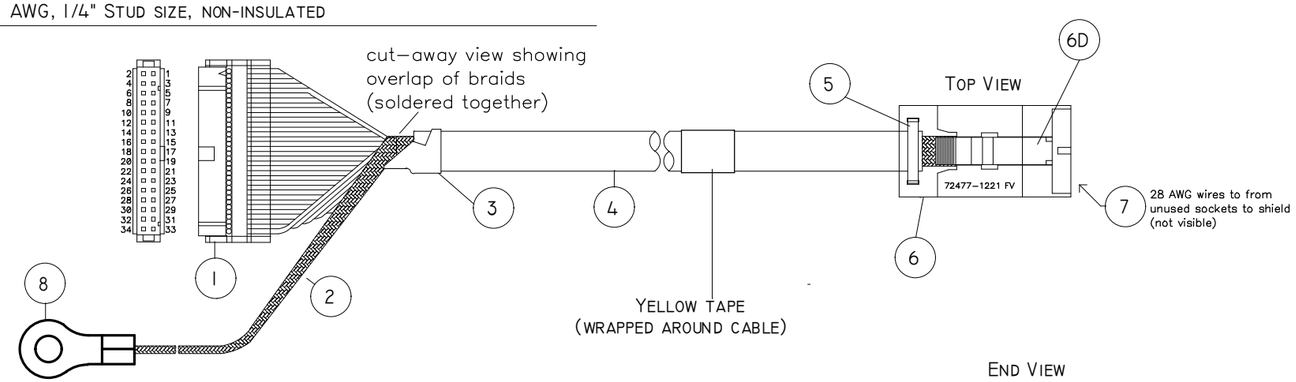

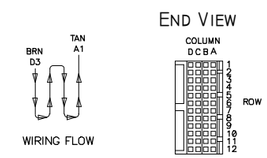

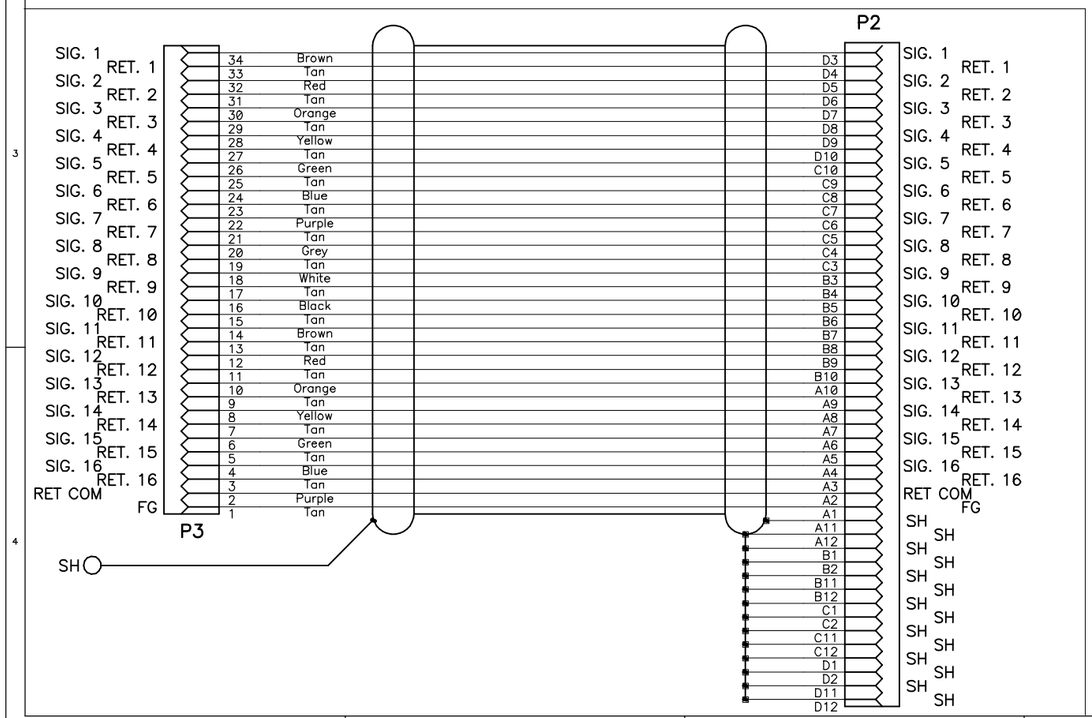

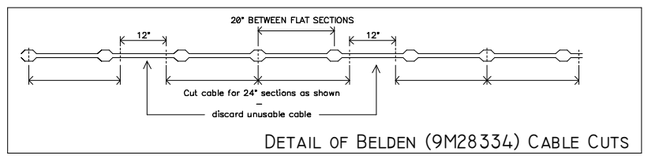

DETAIL OF BELDEN (9M28334) CABLE CUTS

Notes:
1. Cable is .050" pitch, which matches connector J1.
2. Connector J2 has 2mm pitch, and will be attached to round section of cable, so wires will need to be separated and individually terminated.

Los Alamos National Laboratory		
Title	CATHODE TO FEE FOR ST. 2 & 3 CABLE ASSEMBLY (REVERSED PI VERSION)	
Size C	Date Originated: 18 July 2000	
	Date Last Revised: 18 July 2000	
LANL DWG #		Approved By: Mischke
PHENIX DWG #: 105-0312-305B		Drawn by: G. Hart
Filename 105-0312-305B.pcb		Sheet of 1