ITEM	PART NO.	QTY.	DESCRIPTION

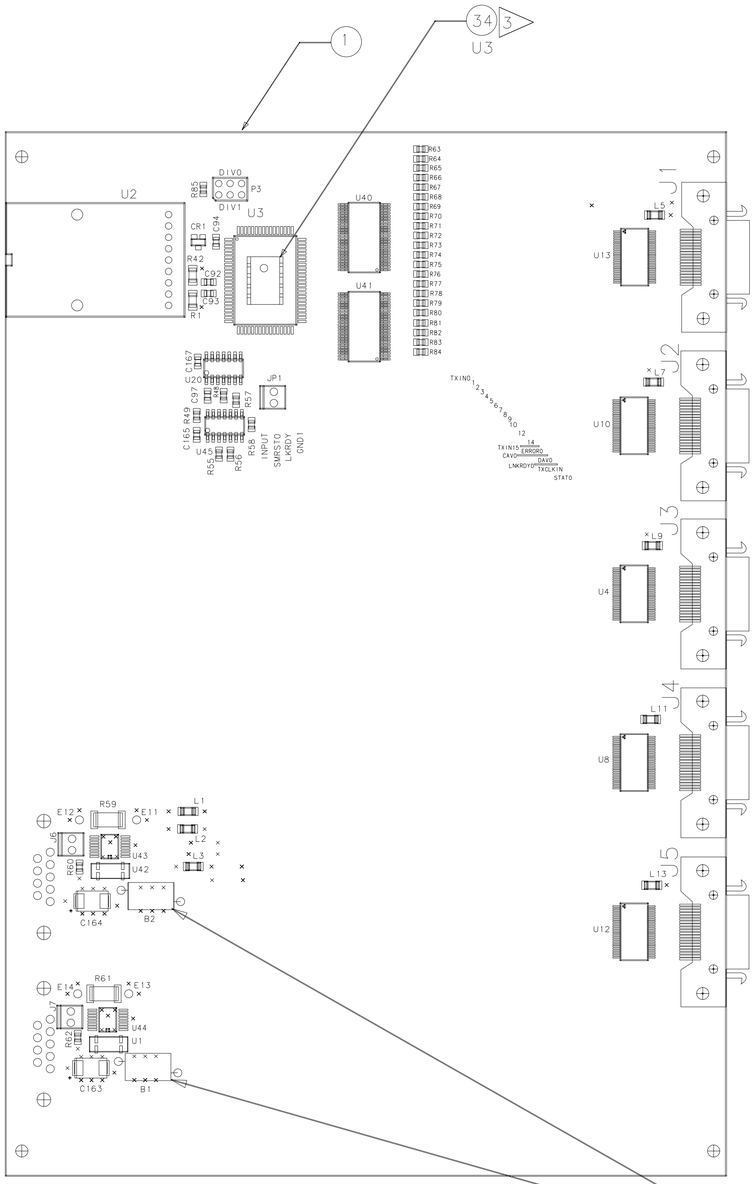

CLINK_TX 101 10Y-226430M09 07-18-00
SILKSCREEN COMPONENT SIDE

SEE DETAIL A

FRONT VIEW

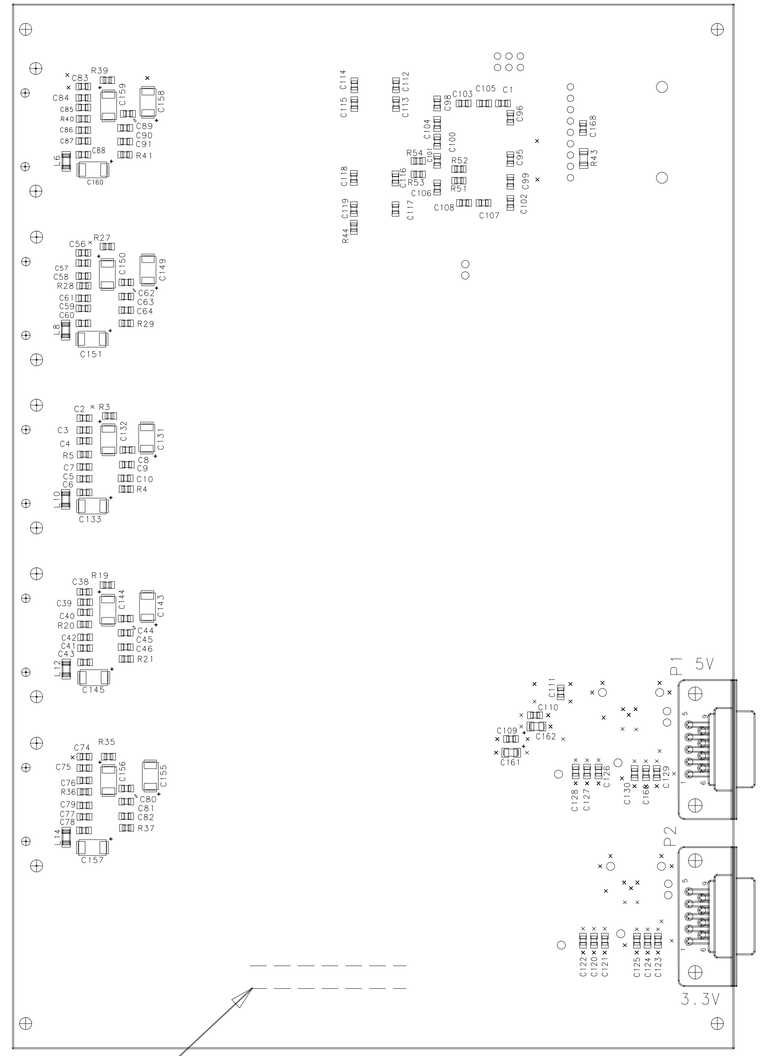

CLINK_TX J01 10Y-226430M10 07-18-00
SILKSCREEN SOLDER SIDE

2

BACK VIEW

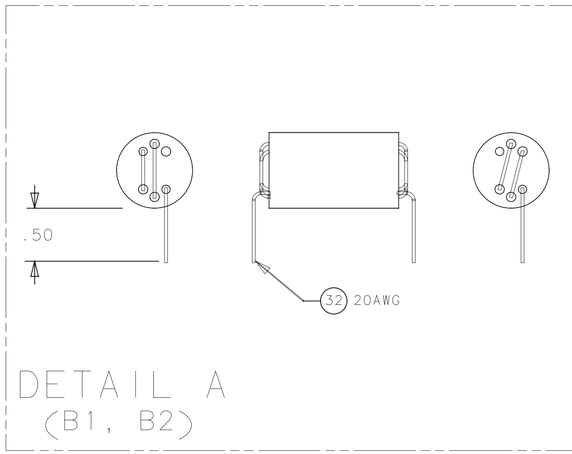

DETAIL A
(B1, B2)

REVISION LETTER	CLASS REVIEW	REVISIONS	DATE	CHANGED BY	CHECKED BY	APPROVED BY
D		ADDED HEATSINK	10/23/00	G.S.		
B		ADDED DETAIL A	08/15/00	G.S.		
A		REWORKED LAYOUT	7/18/00	G.S.		
		ORIGINAL ISSUE				

LOS ALAMOS
LOS ALAMOS NATIONAL LABORATORY
LOS ALAMOS, NEW MEXICO 87545

CLASSIFICATION OF DRAWING: UNCL
PART: UNCL TITLE BLOCK: UNCL

TITLE
CLINK_TX
CHANNEL LINK
ASSEMBLY

	SIGNATURE	DATE	GROUP
ORIGINATED	M. ECHAVE	01-03-00	NIS-4
DRAWN	G.SAEWERT	01-03-00	NIS-4
CHECKED			
PROJ. ENGR.			
APPROVED			
RELEASED			

.X= +/-____ 0.XX= +/-____ ANGULAR= +/-____
0.X= +/-____ 0.XXX= +/-____ FINISH= +/-____

SCALE	TOTAL SHEETS	DRAWING NO.	SIZE	SHEET NO.
1/1	2	10Y-226430-D14	D	2