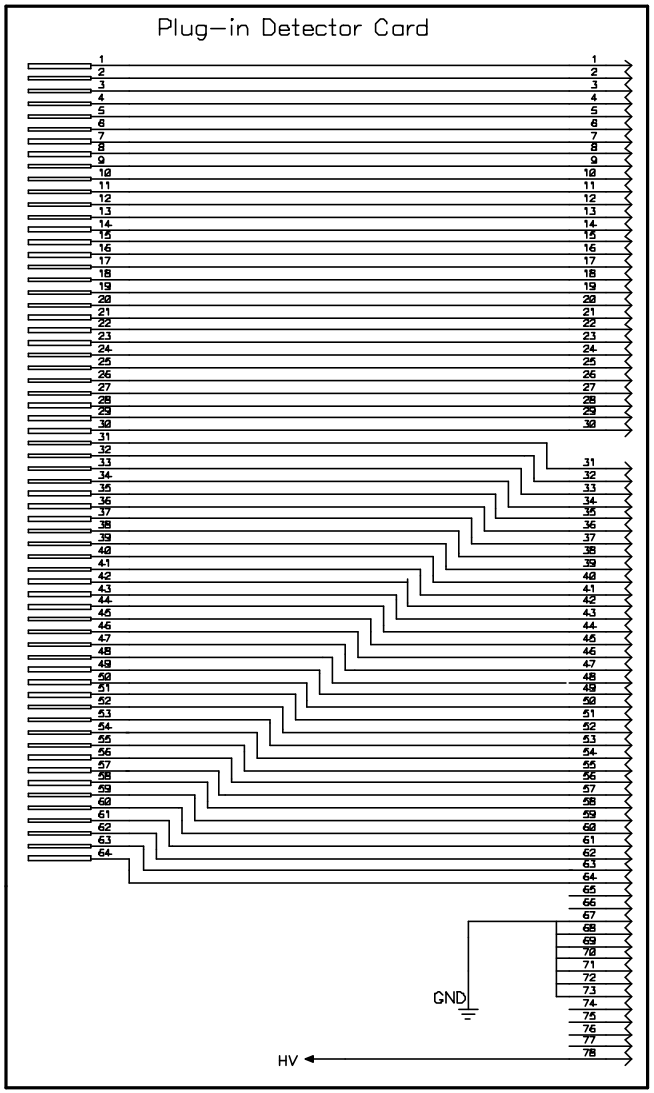

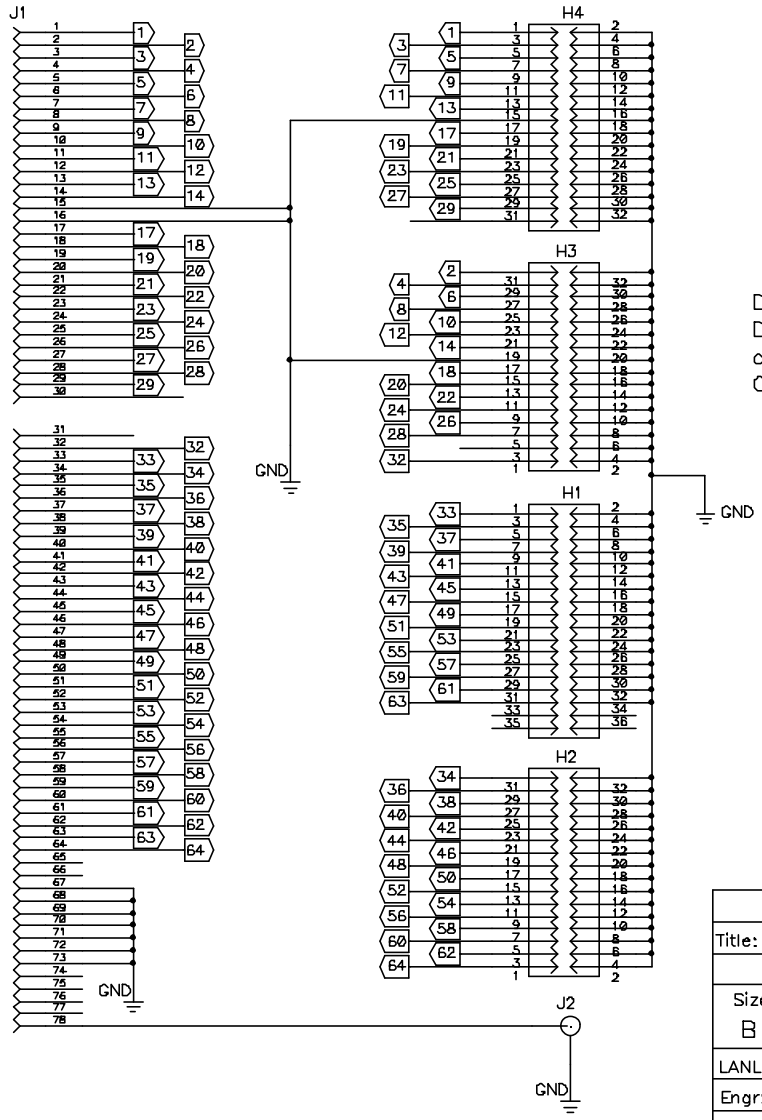

Due to error in connector design
Detector strips and mating readout
channels 15 & 16 are grounded.
Channels 31 & 32 are open

Los Alamos National Laboratory	
Title: 64 ch Strip Detector Motherboard	
SCHEMATIC	
Size B	Date Originated: 2 Oct 2000
	Last Revised: 9 Nov 2000
LANL DWG #: 135Y299070	Approved By: K. Kwaitkowsk
Engr: G. Hart	Drawn by: G. Hart
Filename: 135Y299070.sch	Sheet 1 of 1